CFP59 SERIES

Operation & Maintenance Manual

Fire Pump Drive Engines

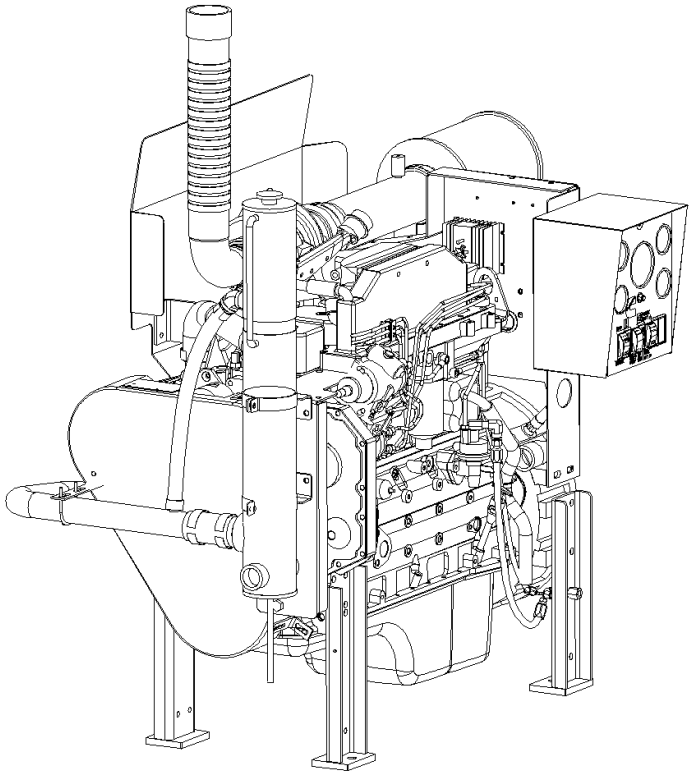

www.cumminsfirepower.com

Foreword

This manual contains information for the correct operation and maintenance of a Cummins Fire Pump engine. It also includes important safety information, engine and systems specifications, troubleshooting guidelines, and listings of Cummins Authorized Repair Locations.

Read and follow all safety instructions. Refer to the General Safety Instructions in Section 1.

Keep this manual with the equipment. If the equipment is traded or sold, give the manual to the new owner.

The information, specifications, and recommended maintenance guidelines in this manual are based on information in effect at the time of printing. Cummins Fire Power, Cummins NPower and Cummins Engine Company, Inc. reserve the right to make changes at any time without obligation. If any differences are found between an engine and the information in this manual, contact the local Cummins Authorized Repair Location.

The latest technology and the highest quality components were used to produce this engine. When replacement parts are needed, we recommend using only genuine Cummins or ReCon® exchange parts. These parts can be identified by the following trademarks:

NOTE: Warranty information is located in Section 11. Make sure you are familiar with the warranty or warranties applicable to your engine.

© 2005 Cummins Inc., Box 3005, Columbus, IN 47202-3005 U.S.A.

Index of Sections

Introduction 1
Engine Identification 2
Installation and Operation 3
Maintenance Guidelines 4
Maintenance Procedures 5
System Diagrams 6
Adjustment, Replace and Replacement 7
Service Literature 8
Service Assistance 9
Maintenance Specifications 10
Warranty Information 11
Troubleshooting 12
Assembly Drawings 13

THIS PAGE INTENTIONALLY LEFT BLANK

Section 1 – Introduction

Section Contents

Page

To the Owner and Operator 1-3
About the Manual 1-3
How to Use the Manual 1-3
Symbols 1-4
Illustrations 1-5
General Safety Instructions 1-6
General Cleaning Instructions 1-8
Acronyms and Abbreviations 1-14

THIS PAGE INTENTIONALLY LEFT BLANK

To the Owner and Operator

Preventative maintenance is the easiest and least expensive type of maintenance. Follow the maintenance schedule recommendations outlined in Maintenance Guidelines in Section 4.

Keep records of regularly scheduled maintenance.

Use the correct fuel, oil, coolant, and filters in the engine as specified in Maintenance Specifications in Section 10.

Cummins Fire Power, Cummins NPower and Cummins Engine Company, Inc use the latest technology and the highest quality components to produce its engines. Cummins recommends using only genuine Cummins parts.

Personnel at Cummins Authorized Repair Locations have been trained to provide expert service and parts support. If a problem that cannot be resolved by a Cummins Authorized Repair Location occurs, follow the steps outlined in the Service Assistance in Section 9.

About the Manual

This manual contains information needed to operate and maintain an engine correctly as recommended by Cummins Fire Power, Cummins NPower and Cummins Engine Company, Inc. Additional service literature (troubleshooting and repair manual) can be ordered by filling out and mailing the Literature Order Form located in Service Literature in Section 8.

Both metric and U.S. customary values are listed in this manual. The metric value is listed first, followed by the U.S. customary in brackets.

Numerous illustrations and symbols are used to aid in understanding the meaning of the text. Refer to the Symbols subsection in this section for a complete listing of symbols and their definitions.

Each section is preceded by a Section Contents to aid in locating information more quickly.

How to Use the Manual

This manual is organized according to intervals at which maintenance on the engine is to be performed. A table that states the required intervals and the checks to be made is located in Section 4. Locate the interval at which maintenance will be performed, then follow the steps given in the referenced section for all the procedures to be performed. All the procedures done under previous maintenance intervals must be performed, also.

Keep a record of all the checks and inspections made. A record form for recording date, mileage/kilometer or hours, and which maintenance checks were performed is located in Section 4.

Refer to the Maintenance Specifications in Section 10 for specifications recommended by Cummins Engine Company, Inc., for your engine. Specifications and torque values for each engine system are given in that section.

Symbols

The following symbols have been used in this manual to help communicate the intent of the instructions. When one of the symbols appears, it conveys the meaning define below:

	**WARNING**. Serious personal injury or extensive property damage can result if the warning instructions are not followed.
	**CAUTION**. Minor personal injury can result or a part, an assembly, or the engine can be damaged if the caution instructions are not followed.
	**INSPECTION** is required.
	Refer to another location in this manual or another publication for additional information.
	Indicates a **REMOVAL** or **DISASSEMBLY** step.
	**LUBRICATE** the part or assembly.
	**CLEAN** the part or assembly.
	**TIGHTEN** to a specific torque.
	Indicates an **INSTALLATION** or an **ASSEMBLY** step
	**PERFORM** a mechanical or time **MEASUREMENT**.
	**PERFORM** an electrical **MEASUREMENT**.

Illustrations

The illustrations used in this manual are intended to give an example of a problem, and to show what to look for and where the problem can be found.

Some of the illustrations are “generic” and might not look exactly like the engine or parts used in your application.

The illustrations can contain symbols to indicate an action required, and an acceptable or not acceptable condition.

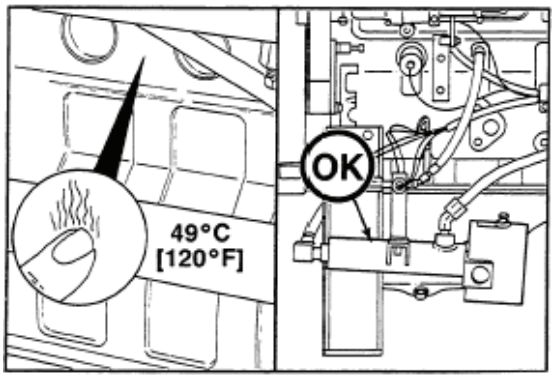

The illustrations are also intended to show repair or replacement procedures.

The illustration can differ from your application, but the procedure given will be the same.

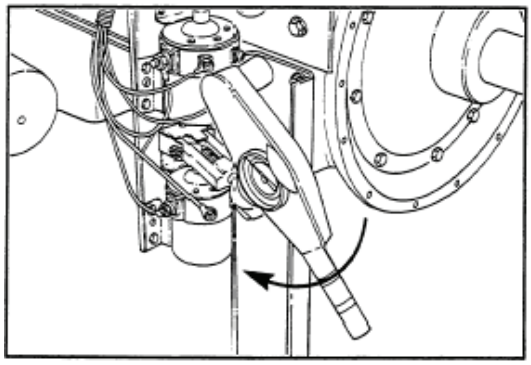

General Safety Instructions

WARNING

Improper practices or carelessness can cause burns, cuts, mutilation, asphyxiation or other bodily injury or death.

- Read and understand all of the safety precautions and warnings before performing any repair. This list contains the general safety precautions that must be followed to provide personal safety. Special safety precautions are included in the procedures when they apply.
- Make sure the work area surrounding the product is dry, well lit, ventilated; free from clutter, loose tools, parts, ignition sources and hazardous substances. Be aware of hazardous conditions that can exist.
- **Always** wear protective glasses and protective shoes when working.
- Rotating parts can cause cuts, mutilation or strangulation.
- Do not wear loose-fitting or torn clothing. Remove all jewelry when working.
- Disconnect the battery (negative [-] cable first) and discharge any capacitors before beginning any repair work. Put a "**Do Not Operate**" tag on the controls.
- Use **ONLY** the proper engine barring techniques for manually rotating the engine. Do not attempt to rotate the crankshaft by pulling or prying on the fan. This practice can cause serious personal injury, property damage, or damage to the fan blade(s) causing premature fan failure.
- If an engine has been operating and the coolant is hot, allow the engine to cool before you slowly loosen the filler cap and relieve the pressure from the cooling system.
- Do not work on anything that is supported **ONLY** by lifting jacks or a hoist. Always use blocks or proper stands to support the product before performing any service work.
- Relieve all pressure in the air, oil, and the cooling systems before any lines, fittings, or related items are removed or disconnected. Be alert for possible pressure when disconnecting any device from a system that utilizes pressure. Do not check for pressure leaks with your hand. High pressure oil or fuel can cause personal injury.
- To avoid personal injury, use a hoist or get assistance when lifting components that weigh 23 kg [50 lb] or more. Make sure all lifting devices such as chains, hooks, or slings are in good condition and are of the correct capacity. Make sure hooks are positioned correctly. Always use a spreader bar when necessary. The lifting hooks must not be side-loaded.
- Corrosion inhibitor contains alkali. Do not get the substance in your eyes. Avoid prolonged or repeated contact with skin. Do not swallow internally. In case of contact, immediately wash skin with soap and water. In case of contact, immediately flood eyes with large amounts of water for a minimum of 15 minutes. **IMMEDIATELY CALL A PHYSICIAN. KEEP OUT OF REACH OF CHILDREN**.

General Safety Instructions (Cont.)

- Naphtha and Methyl Ethyl Ketone (MEK) are flammable materials and must be used with caution. Follow the manufacturer's instructions to provide complete safety when using these materials. **KEEP OUT OF REACH OF CHILDREN**.
- To avoid burns, be alert for hot parts on products that have just been turned OFF, and hot fluids in lines, tubes, and compartments.
- **Always** use tools that are in good condition. Make sure you understand how to use them before performing any service work. Use **ONLY** genuine Cummins or Cummins ReCon® replacement parts.
- **Always** use the same fastener part number (or equivalent) when replacing fasteners. Do not use a fastener of lesser quality if replacements are necessary.
- Do not perform any repair when fatigued or after consuming alcohol or drugs that can impair your functioning.
- Some state and federal agencies in the United States of America have determined that used engine oil can be carcinogenic and can cause reproductive toxicity. Avoid inhalation of vapors, ingestion, and prolonged contact with used engine oil. Dispose of waste oil in accordance with applicable requirements.

General Cleaning Instructions

WARNING

Abrasive material must be kept out of or removed from oil passages and parts wear points. Abrasive material in oil passages can cause bearing and bushing failures that can progress to major component damage beyond reuse. This is particularly true of main and rod bearings.

WARNING

Excessive sanding or grinding the carbon ring from the top of the cylinder liners can damage the liner beyond reuse. The surface finish will be damaged and abrasive particles can be forced into the liner material which can cause early cylinder wear-out or piston ring failures.

WARNING

When using solvents, acids, or alkaline materials for cleaning, follow the manufacturer's recommendations for use. Wear goggles and protective clothing to reduce the possibility of personal injury.

WARNING

When using a steam cleaner, wear safety glasses or a face shield, as well as protective clothing. Hot steam can cause serious personal injury.

CAUTION

Do not use bead blasting cleaning methods on aluminum pistons skirts or the pin bores in any piston, piston skirt or piston crown. Small particles of the media will embed in the aluminum or other soft metal and result in premature wear of the cylinder liner, piston rings, pins and pin bores. Valves, turbocharger shafts, etc., can also be damaged. Follow the cleaning directions listed in the procedures.

CAUTION

Do not contaminate wash tanks and tank type solvent cleaners with the foreign material and plastic beads. Remove the foreign material and plastic beads with compressed air, hot high pressure water or steam before placing them in tanks or cleaners. The foreign material and plastic beads can contaminate the tank and any other engine parts cleaned in the tank. Contaminated parts may cause failures from abrasive wear.

CAUTION

The bead blasting operation must not disturb the metal surface. If the metal surface is disturbed the engine can be damaged due to increased parts clearance or inadequate surface finish on parts that move against other parts.

Definition of Clean

Parts must be free of debris that can contaminate any engine system. This does not necessarily mean they have to appear as new.

Sanding gasket surfaces until the factory machining marks are disturbed adds no value and is often harmful to forming a seal. It is important to maintain surface finish and flatness tolerances to form a quality sealing surface. Gaskets are designed to fill small voids in the specified surface finish.

Sanding gasket surfaces where edge-molded gaskets are used is most often unnecessary. Edge-molded gaskets are those metal carriers with sealing material bonded to the edges of the gasket to seal while the metal portion forms a metal to metal joint for stability. Any of the small amounts of sealing material that can stick to the parts are better removed with a blunt-edged scraper on the spots rather than spending time polishing the whole surface with an air sander or disc.

For those gaskets that do not have the edge molding, nearly all have a material that contains release agents to prevent sticking. Certainly this is not to say that some gaskets are not difficult to remove because the gasket has been in place a long time, has been overheated or the purpose of the release agent has been defeated by the application of some sealant. The object however is just to remove the gasket without damaging the surfaces of the mating parts without contaminating the engine (don't let the little bits fall where they can not be removed).

Bead blasting piston crowns until the dark stain is removed is unnecessary. All that is required is to remove the carbon build-up above the top ring and in the ring grooves. There is more information on bead blasting and piston cleaning later in this document.

Cummins Inc. does not recommend sanding or grinding the carbon ring at the top of cylinder liners until clean metal is visible. The liner will be ruined and any signs of a problem at the top ring reversal point (like a dust-out) will be destroyed. It is necessary to remove the carbon ring to provide for easier removal of the piston assembly. A medium bristle, high quality, steel wire wheel that is rated above the rpm of the power tool being used will be just as quick and there will be less damage. Yes, one must look carefully for broken wires after the piston is removed but the wires are more visible and can be attracted by a magnet.

Oil on parts that have been removed from the engine will attract dirt in the air. The dirt will adhere to the oil. If possible, leave the old oil on the part until it is ready to be cleaned, inspected and installed, and then clean it off along with any attracted dirt. If the part is cleaned then left exposed it can have to be cleaned again before installation. Make sure parts are lubricated with clean oil before installation. They do not need to be oiled all over but do need oil between moving parts (or a good lube system priming process conducted before cranking the engine).

Bead blasting parts to remove exterior paint is also usually unnecessary. The part will most likely be painted again so all that needs happen is remove any loose paint.

Using Abrasive Pads and Abrasive Paper

The keyword here is "abrasive". There is no part of an engine designed to withstand abrasion. That is they are all supposed to lock together or slide across each other. Abrasives and dirt particles will degrade both functions.

WARNING

Abrasive material must be kept out of or removed from oil passages and parts wear points. Abrasive material in oil passages can cause bearing and bushing failures that can progress to major component damage beyond reuse. This is particularly true of main and rod bearings.

Cummins Inc. does not recommend the use of emery cloth or sand paper on any part of an assembled engine or component including but not limited to removing the carbon ridge from cylinder liners or to clean block decks or counterbores.

Great care must be taken when using abrasive products to clean engine parts, particularly on partially assembled engines. Abrasive cleaning products come in many forms and sizes. All of them contain aluminum oxide particles, silicon carbide, or sand or some other similar hard material. These particles are harder than most of the parts in the engine. Since they are harder, if they are pressed against softer material they will either damage the material or become embedded in it. These materials fall off the holding media as the product is used. If the products are used with power equipment the particles are thrown about the engine. If the particles fall between two moving parts, damage to the moving parts is likely.

If particles that are smaller than the clearance between the parts while they are at rest (engine stopped), but larger than the running clearance then damage will occur when the parts move relative to each other (engine started). While the engine is running and there is oil pressure, particles that are smaller than the bearing clearance are likely to pass between the parts without damage and be trapped in the oil filter. However, particles larger than the bearing clearance will remove material from one part and can become embedded in one of the parts. Once embedded in one part it will abrade the other part until contact is no longer being made between the two parts. If the damage sufficiently degrades the oil film, the two parts will come into contact resulting in early wear-out or failure from lack of effective lubrication.

Abrasive particles can fly about during cleaning it is very important to block these particles from entering the engine as much as possible. This is particularly true of lubricating oil ports and oil drilling holes, especially those located downstream of the lubricating oil filters. Plug the holes instead of trying to blow the abrasive particles and debris with compressed air because the debris is often simply blown further into the oil drilling.

All old gasket material must be removed from the parts gasket surfaces. However, it is not necessary to clean and polish the gasket surface until the machining marks are erased. Excessive sanding or buffing can damage the gasket surface. Many newer gaskets are of the edge molded type (a steel carrier with a sealing member bonded to the steel). What little sealing material that can adhere is best removed with a blunt-edged scraper or putty knife. Cleaning gasket surfaces where an edge-molded gasket is used with abrasive pads or paper is usually a waste of time.

WARNING

Excessive sanding or grinding the carbon ring from the top of the cylinder liners can damage the liner beyond reuse. The surface finish will be damaged and abrasive particles can be forced into the liner material which can cause early cylinder wear-out or piston ring failures.

Tape off or plug all openings to any component interior before using abrasive pads or wire brushes. If really necessary because of time to use a power tool with abrasive pads, tape the oil drillings closed or use plug and clean as much of the surface as possible with the tool but clean around the oil hole/opening by hand so as to prevent contamination of the drilling. Then remove the tape or plug and clean the remaining area carefully and without the tool. DO NOT use compressed air to blow the debris out of oil drilling on an assembled engine! More likely than not, the debris can be blown further into the drilling. Using compressed air is fine if both ends of the drilling are open but that is rarely the case when dealing with an assembled engine.

Cleaning Gasket Surfaces

The object of cleaning gasket surfaces is to remove any gasket material, not refinish the gasket surface of the part.

Cummins Inc. does not recommend any specific brand of liquid gasket remover. If a liquid gasket remover is used, check the directions to make sure the material being cleaned will not be harmed.

Air powered gasket scrapers can save time but care must be taken to not damage the surface. The angled part of the scraper must be against the gasket surface to prevent the blade from digging into the surface. Using air powered gasket scrapers on parts made of soft materials takes skill and care to prevent damage.

Do not scrape or brush across the gasket surface if at all possible.

Solvent and Acid Cleaning

Several solvent and acid-type cleaners can be used to clean the disassembled engine parts (other than pistons. See Below). Experience has shown that the best results can be obtained using a cleaner that can be heated to 90 to 95 °C (180 to 200 °F). Kerosene emulsion based cleaners have different temperature specifications, see below. A cleaning tank that provides a constant mixing and filtering of the cleaning solution will give the best results. Cummins Inc. does not recommend any specific cleaners. Always follow the cleaner manufacturer's instructions. Remove all the gasket material, o-rings, and the deposits of sludge, carbon, etc., with a wire brush or scraper before putting the parts in a cleaning tank. Be careful not to damage any gasket surfaces. When possible, steam clean the parts before putting them in the cleaning tank.

WARNING

When using solvents, acids, or alkaline materials for cleaning, follow the manufacturer’s recommendations for use. Wear goggles and protective clothing to reduce the possibility of personal injury.

Experience has shown that kerosene emulsion based cleaners perform the best to clean pistons. These cleaners should not be heated to temperature in excess of 77 °C (170 °F). The solution begins to break down at temperatures in excess of 82 °C (180 °F) and will be less effective.

Do not use solutions composed mainly of chlorinated hydrocarbons with cresols, phenols and/or cresylic components. They often do not do a good job of removing deposits from the ring groove and are costly to dispose of properly.

Solutions with a pH above approximately 9.5 will cause aluminum to turn black; therefore do not use high alkaline solutions.

Chemicals with a pH above 7.0 are considered alkaline and those below 7.0 are acidic. As you move further away from the neutral 7.0, the chemicals become highly alkaline or highly acidic.

Remove all the gasket material, o-rings, and the deposits of sludge, carbon, etc., with a wire brush or scraper before putting the parts in a cleaning tank. Be careful to not damage any gasket surfaces. When possible use hot high pressure water or steam clean the parts before putting them in the cleaning tank. Removing the heaviest dirt before placing in the tank will allow the cleaner to work more effectively and the cleaning agent will last longer.

Rinse all the parts in hot water after cleaning. Dry completely with compressed air. Blow the rinse water from all the capscrew holes and the oil drillings.

If the parts are not to be used immediately after cleaning, dip them in a suitable rust proofing compound. The rust proofing compound must be removed from the parts before assembly or installation on the engine.

Steam Cleaning

Steam cleaning can be used to remove all types of dirt that can contaminate the cleaning tank. It is a good method for cleaning the oil drillings and coolant passages.

WARNING

When using a steam cleaner, wear safety glasses or a face shield, as well as protective clothing. Hot steam can cause serious personal injury.

Do not steam clean the following components:

- Electrical Components
- Wiring Harnesses
- Injectors
- Fuel Pump
- Belts and Hoses
- Bearings (ball or taper roller)
- Electronic Control Module (ECM)
- ECM Connectors

Plastic Bead Cleaning

Cummins Inc. does not recommend the use of glass bead blast or walnut shell media on any engine part. Cummins Inc. recommends using only plastic bead media, Part Number 3822735 or equivalent on any engine part. Never use sand as a blast media to clean engine parts. Glass and walnut shell media when not used to the media manufacturer's recommendations can cause excess dust and can embed in engine parts that can result in premature failure of components through abrasive wear.

Plastic bead cleaning can be used on many engine components to remove carbon deposits. The cleaning process is controlled by the use of plastic beads, the operating pressure and cleaning time.

CAUTION

Do not use bead blasting cleaning methods on aluminum pistons skirts or the pin bores in any piston, piston skirt or piston crown. Small particles of the media will embed in the aluminum or other soft metal and result in premature wear of the cylinder liner, piston rings, pins and pin bores. Valves, turbocharger shafts, etc., can also be damaged. Follow the cleaning directions listed in the procedures.

CAUTION

Do not contaminate wash tanks and tank type solvent cleaners with the foreign material and plastic beads. Remove the foreign material and plastic beads with compressed air, hot high pressure water or steam before placing them in tanks or cleaners. The foreign material and plastic beads can contaminate the tank and any other engine parts cleaned in the tank. Contaminated parts may cause failures from abrasive wear.

Plastic bead blasting media, Part Number 3822735, can be used to clean all piston ring grooves. Do not sure any bead blasting media on piston pin bores or aluminum skirts.

Plastic Bead Cleaning (Cont)

Follow the equipment manufacturer's cleaning instructions. Make sure to adjust the air pressure in the blasting machine to the bead manufacturer's recommendations. Turning up the pressure can move material on the part and cause the plastic bead media to wear out more quickly. The following guidelines can be used to adapt to manufacturer's instructions:

Bead size: U.S. size Number 16 — 20 for piston cleaning with plastic bead media, Part Number 3822735

Operating Pressure — 270 kPa (40 psi) for piston cleaning. Pressure should not cause beads to break.

Steam clean or wash the parts with solvent to remove all of the foreign material and plastic beads after cleaning. Rinse with hot water. Dry with compressed air.

CAUTION

The bead blasting operation must not disturb the metal surface. If the metal surface is disturbed the engine can be damaged due to increased parts clearance or inadequate surface finish on parts that move against other parts.

When cleaning pistons, it is not necessary to remove all the dark stain from the piston. All that is necessary is to remove the carbon on the rim and in the ring grooves. This is best done by directing the blast across the part as opposed to straight at the part. If the machining marks are disturbed by the blasting process, then the pressure is too high or the blast is being held on one spot too long. The blast operation must not disturb the metal surface.

Walnut shell bead blast material is sometimes used to clean ferrous metals (iron and steel). Walnut shell blasting produces a great amount of dust particularly when the pressure if the air pressure on the blasting machine is increased above media manufacturer's recommendation. Cummins Inc. recommends not using walnut shell media to clean engine parts due to the risk media embedment and subsequent contamination of the engine.

Cummins Inc. now recommends glass bead media NOT used to clean any engine parts. Glass media is too easily embedded into the material particularly in soft materials and when air pressures greater than media manufacturer's recommend are used. The glass is an abrasive so when it is in a moving part, that part is abrading all the parts in contact with it. When higher pressures are used the media is broken and forms a dust of a very small size that floats easily in the air. This dust is very hard to control in the shop, particularly if only compressed air (and not hot water) is used to blow the media after it is removed from the blasting cabinet (blowing the part off inside the cabinet may remove large accumulations but never removes all the media).

Bead blasting is best used on stubborn dirt/carbon build-up that has not been removed by first steam/higher pressure washing then washing in a heated wash tank. This is particularly true of pistons. Steam and soak the pistons first then use the plastic bead method to safely remove the carbon remaining in the grooves (instead of running the risk of damaging the surface finish of the groove with a wire wheel or end of a broken piston ring. Make sure the parts are dry and oil free before bead blasting to prevent clogging the return on the blasting machine.

Always direct the bead blaster nozzle "across" rather than directly at the part. This allows the bead to get under the unwanted material. Keep the nozzle moving rather than hold on one place. Keeping the nozzle directed at one-place too long causes the metal to heat up and be moved around. Remember that the spray is not just hitting the dirt or carbon. If the machining marks on the piston groove or rim have been disturbed then there has not been enough movement of the nozzle and/or the air pressure is too high.

Never bead blast valve stems. Tape or use a sleeve to protect the stems during bead blasting. Direct the nozzle across the seat surface and radius rather than straight at them. The object is to remove any carbon build up and continuing to blast to remove the stain is a waste of time.

Acronyms and Abbreviations

AFC	Air Fuel Control	in.	Inch
Amp	Ampere	in-lb	Inch Pound
API	American Petroleum Institute	kg	Kilograms
ASA	Air Signal Attenuator	kPa	Kilopascal
ASTM	American Society of Testing and Materials	l	Liter
AWG	American Wire Gauge	lb.	pound
C	Celsius	lbf.	Pound force
C.I.D.	Cubic Inch Displacement	m	Meter
CAC	Charge Air Cooler	ml	Milliliter
CARB	California Air Resources Board	mm	Millimeter
cc	Cubic Centimeter	MPa	Megapascal
cm	Centimeter	MPH	Miles Per Hour
CPL	Control Parts List	MPQ	Miles Per Quart
cSt	Centistokes	N	Newton
D.	Diameter	N•m	Newton-meter
DCA	Diesel Coolant Additive	OEM	Original Equipment Manufacturer
E.C.S.	Emission Control System	oz.	Ounce
ECM	Electronic Control Module	ppm	Parts Per Million
EPA	Environmental Protection Agency	psi	Pounds Per Square Inch
EPS	Engine Position Sensor	PTO	Power Takeoff
F	Fahrenheit	qt	Quart
FSO	Fuel Shut-Off	RPM	Revolutions Per Minute
FSOS	Fuel Shut-Off Switch	S.A.E.	Society of Automotive Engineers
ft-lb	Foot-Pound	STC	Step Timing Control
GAL	Gallon (US)	TDC	Top Dead Center
H_2O	Water	US	United States of America
Hg	Mercury	V	Volt
HP	Horsepower	VS	Variable Speed

Section 2 - Engine Identification

Section Contents

Page

Fire Pump Engines 2-3
Overspeed Switches 2-3
Operating Speed 2-3
Control System 2-3
External Engine Components and Views 2-4
Instrument Panel 2-9
Fire Pump Identification 2-10
Factory Setting Tag 2-10
Fuel Injection Pump Dataplate 2-11

THIS PAGE INTENTIONALLY LEFT BLANK

Fire Pump Engines

Cummins' complete line of fire pump engines have been approved as packaged units (engine and all accessories) by Factory Mutual Research and listed by Underwriter's Laboratories, Inc. and Underwriter's Laboratories of Canada. Because of the lengthy and expensive process to design and produce a fire pump engine that meets these requirements, no deviations are permitted without approval. These engines are to be used only for fire protection applications.

Overspeed Switches

Each engine is equipped with an overspeed switch which will activate the fuel pump solenoid valve and shut off the engine when the RPM exceeds a present limit. The overspeed switch senses engine speed during the start cycle and stops the starting motor cranking cycle. The overspeed switch must be adjusted to the required speed limit during the in-service inspection.

Operating Speed

All Cummins fire pump engines are shipped from the factory with the operating speed adjusted to the lowest approved operating speed. Final operating speed adjustment must be made at the time of the in-service inspection to obtain the required fire pump operating speed specified by the pump manufacturer.

Control System

The function of a fire pump controller is to start the engine. These controllers are more sophisticated than standard industrial controllers because they include special items for fire pumps. Several options are available:

The automatic start controller can be used for either automatic or manual stop after the fire demand signal is removed.

Pressure recorders are available to provide a permanent record of water pressure fluctuations and engine starts.

Sequential starting is available for multiple-pump installations to keep all pumps from starting simultaneously.

NOTE: Fire pump controllers are not supplied by Cummins Fire Power, or Cummins Engine Company, Inc.

External Engine Components and Views

The following illustrations show the locations of the major external engine components, and other service and maintenance points. Some external components will be at different locations for different engine models.

Instrument Panel Side

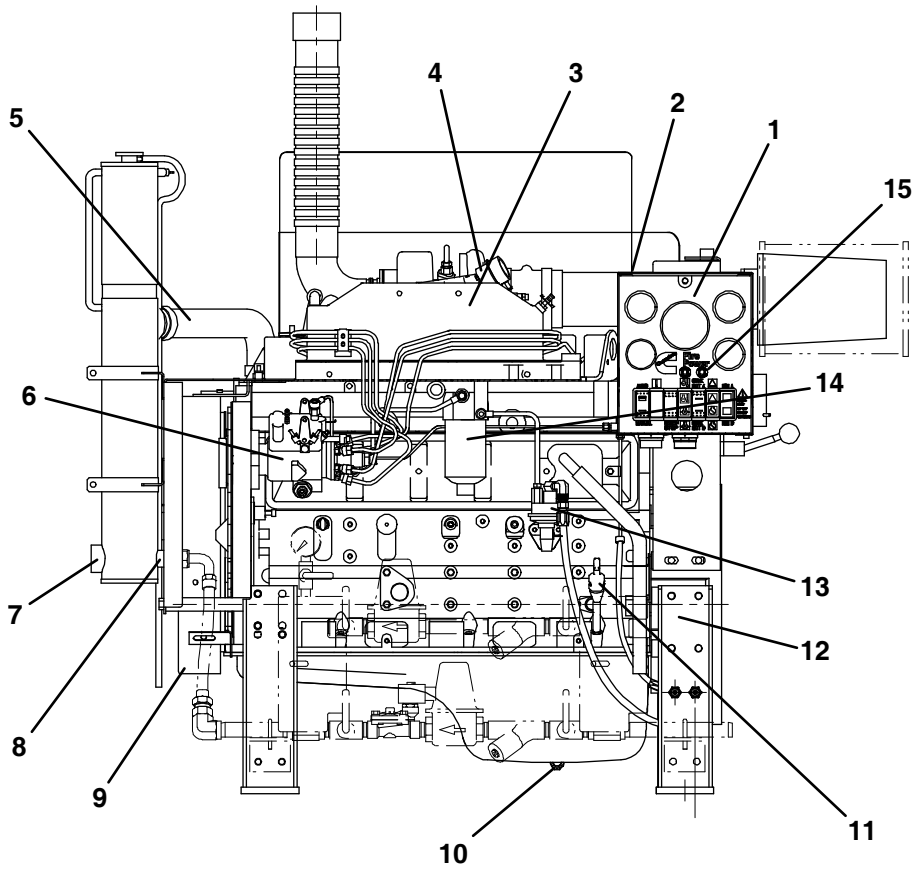

1.	Instrument Panel	6.	Fuel Pump	11.	Dipstick
2.	Terminal Box	7.	Raw Water Outlet	12.	Engine Support
3.	After Cooler	8.	Raw Water Inlet	13.	Lift Pump
4.	Turbo- Boost Limiter	9.	Pulley/Belt Guard	14.	Fuel Filter
5.	Upper Water Hose/Tube	10.	Oil Pan Drain	15.	Circuit Breaker Button

Turbocharger Side

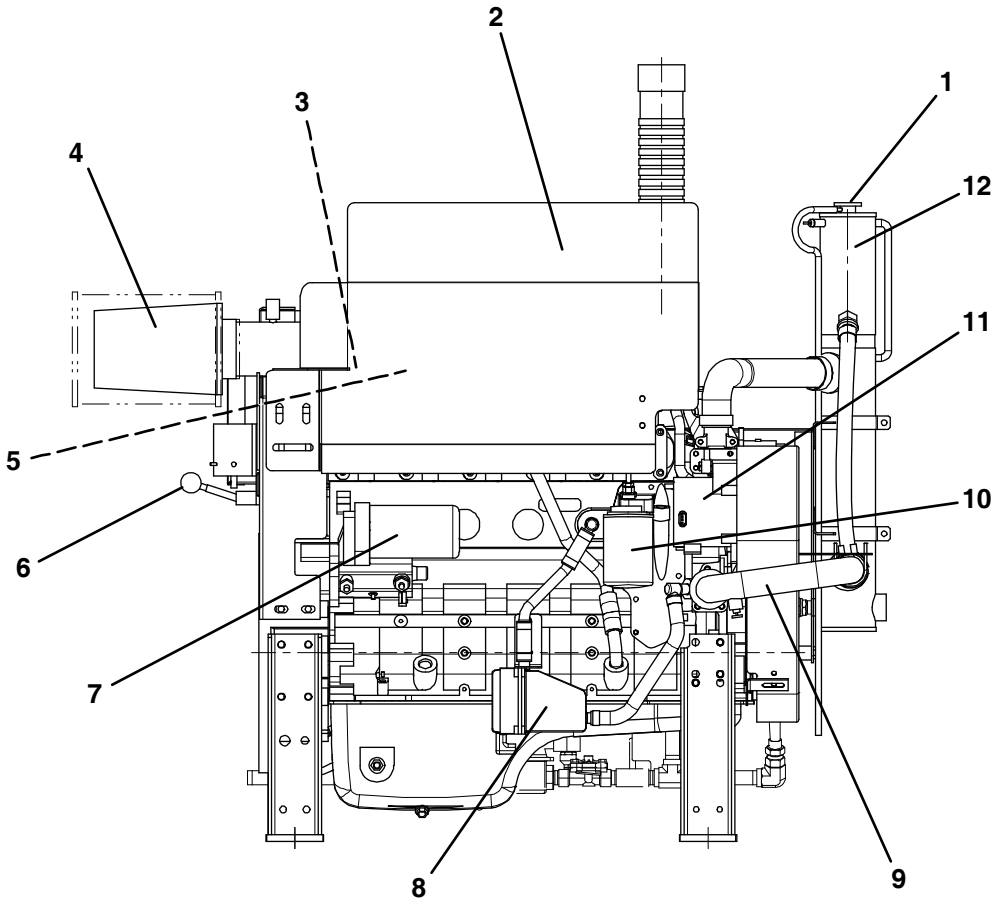

1.	Top Tank Fill	7.	Starter Motor
2.	Turbocharger Shield	8.	Coolant Heater
3.	Valve Cover	9.	Lower Water Hose/Tube
4.	Air Cleaner Element	10.	Lubricating Oil Filter
5.	Turbocharger	11.	Alternator
6.	Manual Start	12.	Heat Exchanger

Front View

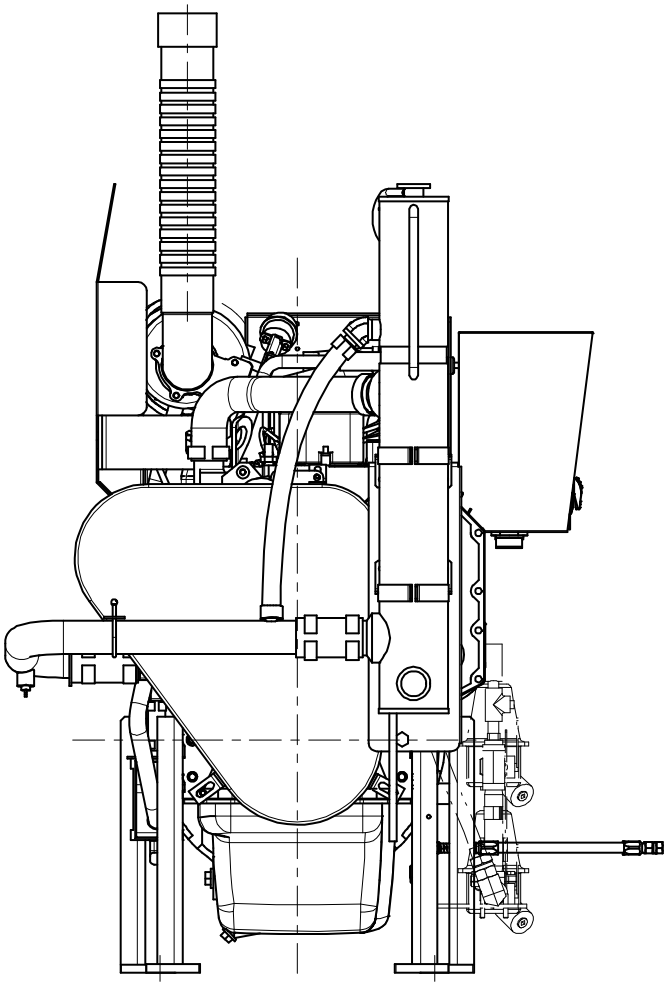

Top View

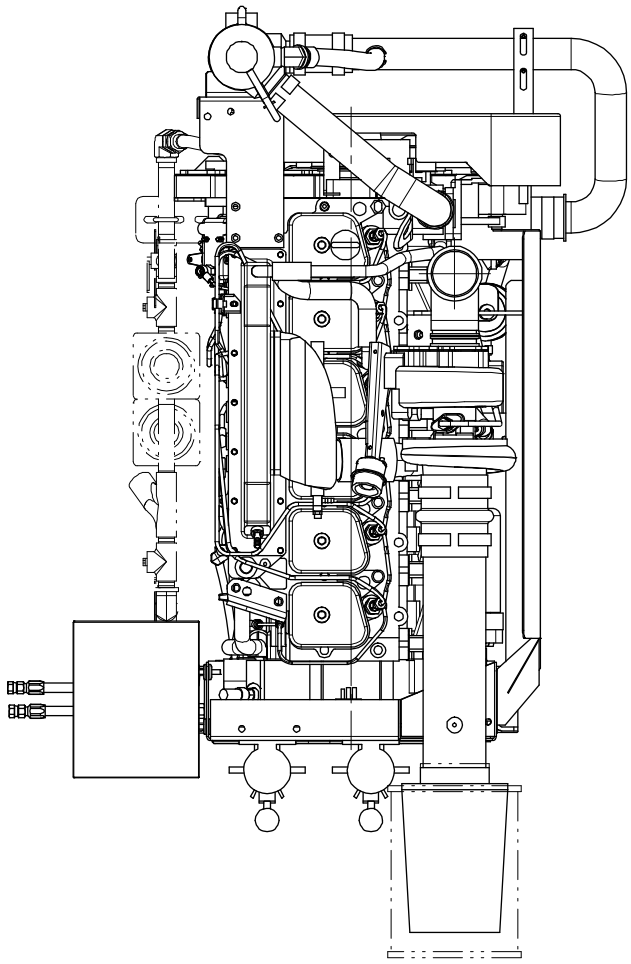

Isometric Views

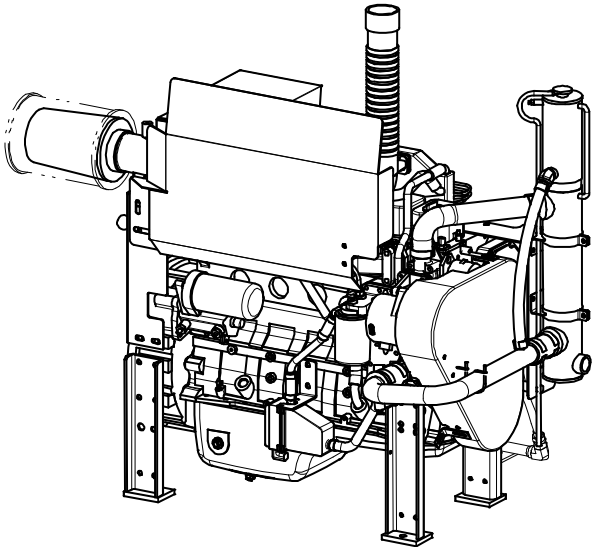

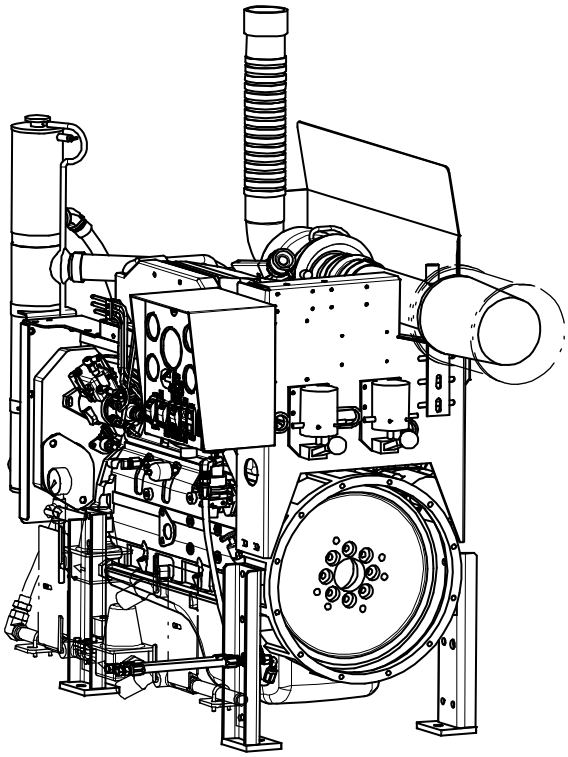

Instrument Panel

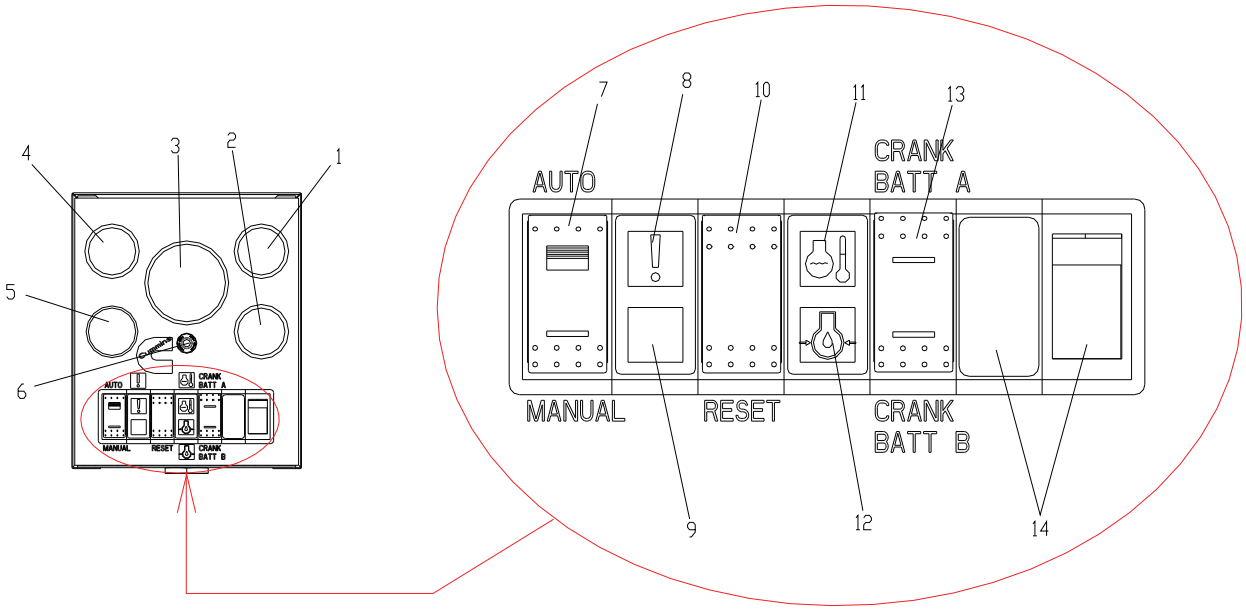

1. Battery “A” Voltmeter
2. Battery “B” Voltmeter
3. Tachometer (with hour-meter)
4. Water Temperature Gauge
5. Lubricating Oil Pressure Gauge
6. Circuit Breaker
7. ON/OFF Switch (AUTO/MANUAL)
8. Overspeed Warning Light
9. Not used
10. Overspeed Reset Switch
11. High Water Temperature Warning Light
12. Low Oil Pressure Warning Light
13. Battery A/B Switch
14. ECM Indicators (for Electronic Engines)

Fire Pump Identification

The fire pump dataplate shows specific information about your engine. The engine serial number (1) and Control Parts List (CPL) (2) provide information for ordering parts and service needs.

NOTE: The fire pump dataplate must not be changed unless approved by Cummins Fire Power.

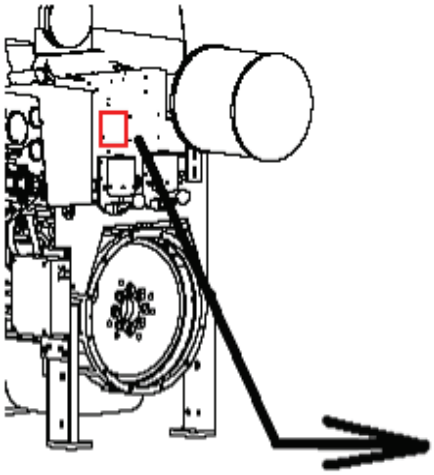

WWW.CUMMINSFIREPOWER.COM

CUMMINS FIRE POWER

A DIVISION OF CUMMINS NPOWER, LLC
DE PERE, WI 54115

MFD. DATE:_____ MODEL:"see table"

SERIAL #:_____ YEAR:_____

RATED SPEED:"see table"

HP OUTPUT: "see table"

SPEED RANGE IF APPLICABLE

MIN. HP @ SPEED:"see table" 0.75 TYP.

MAX HP @ SPEED:"see table"

HORSEPOWER RATINGS WITHIN THE SPECIFIED SPEED RANGE ARE TO BE DETERMINED BY THE USE OF LINEAR INTERPOLATION BETWEEN HORSEPOWERS DEVELOPED AT MINIMUM AND MAXIMUM SPEEDS.

UL LISTED ULC FM APPROVED

INTERNAL COMBUSTION
ENGINE FOR DRIVING
CENTRIFUGAL FIRE PUMP
19ZG

CERTIFIED FOR USE OF SAE DF2
FUEL ONLY PER SAE J313 MAR92

"Part number"

Factory Setting Tag

The Factory Setting Tag is located at the pump end of the engine just above the redundant starter solenoids. Refer to Drawing 8704 (CFP59-F10, F20, F40, F50), Drawing 8705 (CFP59-F15, F25), Drawing 8706 (CFP59-F45) or Drawing 8713 (CFP59-F55) in Section 13 for location details.

This tag identifies to rated operating speed at the rated horsepower. It also provides the over speed switch setpoint. Both values are set at the factory.

Refer to Installation Instructions in Section 3 for procedures to verify or adjust either setpoint.

FACTORY SETTING

ENGINE SPEED SETTING: _____
(@ HP SETTING)

OVERSPEED SWITCH SETTING: _____

Fuel Injection Pump Dataplate

The injection pump dataplate for the Bosch® in-line pump is located on the side of the injection pump. The data plate provides information for fuel pump calibration.

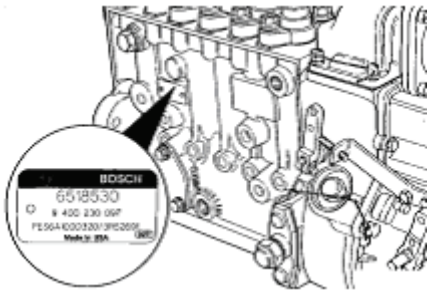

THIS PAGE INTENTIONALLY LEFT BLANK

Section 3 – Installation and Operation

Section Contents

Page

Installation Overview 3-3
Physical Engine Installation 3-4
Fuel Supply Installation 3-6
Fire Pump Installation 3-7
Raw Water Supply Installation 3-8
Battery and Electrical Installation 3-12
Signal and Control Installation 3-13
Coolant System Preparation 3-14
Lubricating Oil System Preparation 3-16
Fuel System Preparation (CFP59-F10, F20, F40, F50) 3-17
Fuel System Preparation (CFP59-F15, F25, F45) 3-19
Fuel System Preparation (CFP59-F55) 3-21
Pre-Start Inspections 3-23
Pre-Lubricate the Engine 3-24
Lubricate Zerk Fittings on Auxiliary Drive Shaft 3-25
Check Engine to Pump Alignment 3-26
Initial Start-Up 3-27
Initial Start 3-34
Second Start 3-37
Rated Speed Setpoint Adjustment (CFP59-F10, F20, F40, F50) 3-38
Rated Speed Setpoint Adjustment (CFP59-F15, F25, F45) 3-40
Rated Speed Setpoint Adjustment (CFP-F45) 3-42

Section Contents (Cont)

Rated Speed Setpoint Adjustment (CFP-F55) 3-44
Overspeed Setpoint Adjustment and Testing 3-45
Crank Terminate Adjustment and Testing 3-49
Isolated Acceptance Testing 3-52
Integrated Acceptance Testing 3-53
General Operating Information 3-54
Normal Remote Starting Procedure 3-55
Normal Local Starting Procedure 3-57
Jumpering the Batteries 3-61
Operating the Engine 3-62
Emergency Manual Starting Procedures 3-63
Emergency Manual Mode Electrical Start 3-64
Emergency Manual Mode Non-Electrical Start (CFP59-F10, F20, F40, F50) 3-66
Emergency Manual Mode Non-Electrical Start (CFP59-F15, F25, F45) 3-68
Starting Procedure - After Extended Shutdown or Oil Change 3-70
Emergency Manual Stopping Procedure 3-70

Installation Overview

The first part of this section provides instructions for the initial installation, adjustment, and testing of the Cummins NPower FirePump engine. Appropriate portions of this section should also be used when returning the engine to operation after overhaul or major maintenance. The second parts details normal operations.

Physical Engine Installation

Location

Refer to the following drawings in Section 13 for the general fire pump and engine layout:

Model	Drawing
• CFP59-F10, F15, F20, F25, F40, F45, F50	• Drawing CFP59_GEN
• CFP59-F55	• Drawing CFP59-F55_GEN

Refer to the following drawings in Section 13 for the general fire pump engine power module assembly:

Model	Drawing
• CFP59-F10, F20, F40, F50	• Drawing 8704
• CFP59- F15, F25	• Drawing 8705
• CFP59-F45	• Drawing 8706
• CFP59-F55	• Drawing 8713

•

WARNING

Do not operate a diesel engine where there are or can be combustible vapors. These vapors can be sucked through the air intake system and cause engine acceleration and overspeeding, which can result in a fire, an explosion, and extensive property damage. Numerous safety devices are available, such as air intake shutoff devices, to minimize the risk of overspeeding in which an engine, because of application, might operate in a combustible environment (from a fuel spill or gas leak, for example). Cummins Engine Company, Inc., does not know how you will use your engine. The equipment owner and operator, therefore, is responsible for safe operation in a hostile environment. Consult your Cummins Authorized Repair Location for further information.

Install the fire pump engine in a sheltered environment protected from extremes of weather. Any enclosure must protect the water supply from freezing. Ensure that the engine and electrical components are not exposed to significant water dripping or sprays. Avoid installation in a dusty or dirty environment. Provide adequate physical protection from other physical damage as may be present in the specific location. (Refer to National Fire Protection Association NFPA20-2003 Chapter 11 for additional installation requirements for installations in the USA.)

Design the installation to meet the engine's mounting requirements. Refer to General Engine Data in Section 10.

Install the engine on a stable level foundation that is designed for the load and vibration of pump operation.

Install the engine with ample room for servicing of the engine, the pump, fuel supply, and support systems.

Physical Engine Installation (Cont)

Ensure that the engine location is free of any risk of exposure to combustible vapors.

Physical Installation

Use the supplied lifting hooks on the engine to position the engine.

Provide engine support as required to support the wet weight specified in General Engine Data in Section 10.

Position the engine as required for the interface with the pump, piping, and electrical connections.

Level the installation with shims as required.

Secure the engine to the support or floor.

Connect the exhaust piping.

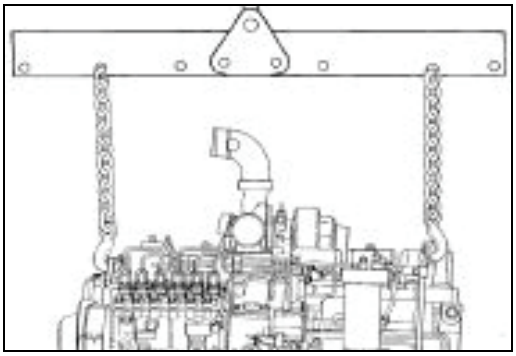

Fuel Supply Installation

NOTE: Refer to National Fire Protection Association NFPA20-2003 Chapter 11 for additional installation requirements for installations in the USA. Ensure that the fuel system is installed in a safe and an effective manner.

Install an elevated Diesel # 2 fuel tank or other fuel supply arrangement that meets the specifications listed in Fuel System Specifications in Section 10.

Size the fuel tank for the maximum expected full-load engine operation period with the initial fuel level at the minimum level for refueling.

CFP59-F10, F20, F40, and F50 Models

Install a ¼" NPT (minimum) fuel supply line to the fire pump engine.

Install a ¼" NPT (minimum) fuel return line. Route this line to the bottom of the fuel tank in order to minimize the return head.

For CFP59-F15, F25, F45, and F55 models, install a ¼" NPT (minimum) fuel return line. Route this line to the bottom of the fuel tank in order to minimize the return head.

Provide a pre-filter on the fuel line to the fire pump engine.

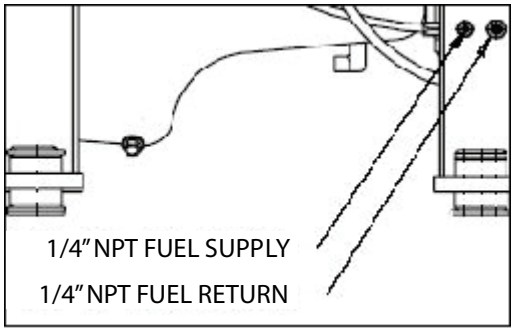

CFP59-F15, F25, F45, and F55 models

Install a ¼" NPT (minimum) fuel supply line to the fire pump engine.

Install a ¼" NPT (minimum) fuel return line. Route this line to the bottom of the fuel tank in order to minimize the return head.

Provide a pre-filter on the fuel line to the fire pump engine.

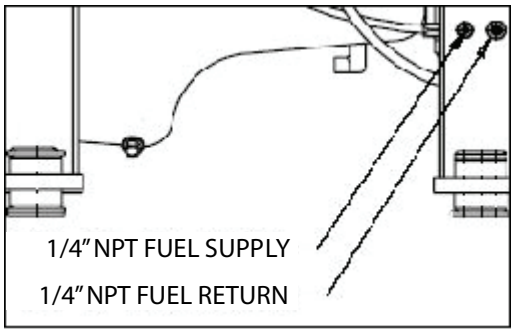

Fire Pump Installation

Install the customer supplied fire pump as per the pump manufacturer's instructions and applicable code requirements. Refer to National Fire Protection Association NFPA20-2003 Chapter 11 for requirements for installations in the USA. Ensure that the engine and pump are correctly aligned.

Raw Water Supply Installation

Overview

Raw water is used to cool the engine cooling fluid. Raw water is supplied from the fire pump prior to the pump discharge flange. It is forced through a cooling loop by fire pump pressure to the heat exchanger. In the heat exchanger, it flows through the tubes in the bundle and is discharged to an open waste cone. The raw water supply must be immediately available when the engine is started.

Refer to the Cooling System Flow Diagrams in Section 6 for a simplified block diagram of the cooling water system. Refer to Cooling System Specifications in Section 10 for pipe size requirements.

Refer to Drawing 8682 in Section 13 for the optional raw water piping manifold that is available from Cummins Fire Power.

If the piping supplied by the customer, provide raw water supply piping and components equivalent to that can be supplied by Cummins FirePower and as shown in Assembly Diagram, Raw Water Piping in Section 6. Refer to National Fire Protection Association NFPA20-2003 Chapter 11 for installation requirements for installations in the USA. When choosing the components for the raw water supply and by-pass, care must be taken to ensure that the internal cross sectional area of the component is at least as large as the recommended pipe size.

When the raw water piping is installed, adjust both pressure regulator setpoints before operating the pump. Damage to the heat exchanger may occur from improperly regulated raw water supply pressure.

Raw Water Supply and Drain without Cummins Raw Water Manifold

NOTE: Raw water outlet piping from the heat exchanger should be one pipe size larger than the supply piping.

NOTE: The velocity of raw water should be as great as possible without exceeding the maximum shown on the appropriate engine data sheet.

NOTE: Failure to comply will result in engine overheat and failure.

Provide raw water supply to the engine side of the heat exchanger.

Provide an open waste cone raw water drain at the outside of the heat exchanger.

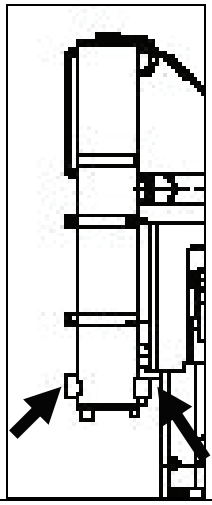

Raw Water Supply Installation (Cont)

Raw Water Supply and Drain with Cummins Raw Water Manifold

NOTE: Raw water outlet piping from the heat exchanger should be one pipe size larger than the supply piping.

NOTE: The velocity of raw water should be as great as possible without exceeding the maximum shown on the appropriate engine data sheet.

NOTE: Failure to comply will result in engine overheat and failure.

Provide raw water supply to the raw water manifold inlet.

Provide an open waste cone raw water drain at the outside of the heat exchanger.

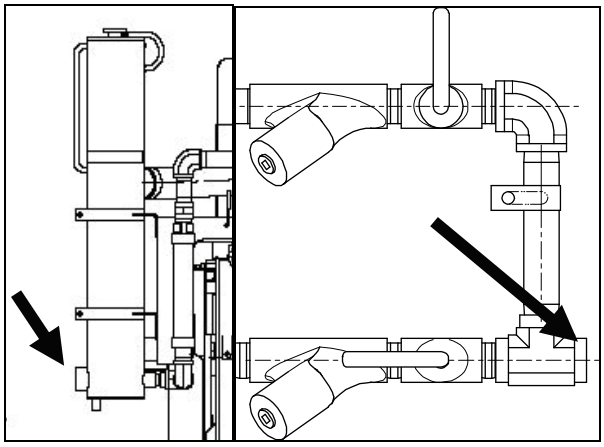

Raw Water Supply Installation (Cont)

Check Raw Water Pressure Regulator Setpoints

NOTE: Adapt this procedure to the actual installation if a Cummins raw water manifold is not supplied.

Temporarily remove the raw water inlet piping from the engine coolant heat exchanger. Refer to Drawing 9634 in Section 13.

Temporarily remove the raw water supply piping from the fire pump to the manifold.

Temporarily supply an alternate source of raw water to the inlet to the raw water manifold. The temporary water supply pressure should exceed 414 kPa [60 psig].

Provide temporary drain piping at the raw water manifold outlet.

If closed, open the pressure gauge isolation valve.

NOTE: The normal line has the solenoid valve. The bypass line does not.

If open, close the normal line inlet valve. Open the bypass line inlet and outlet valves.

Apply water pressure to the raw water manifold.

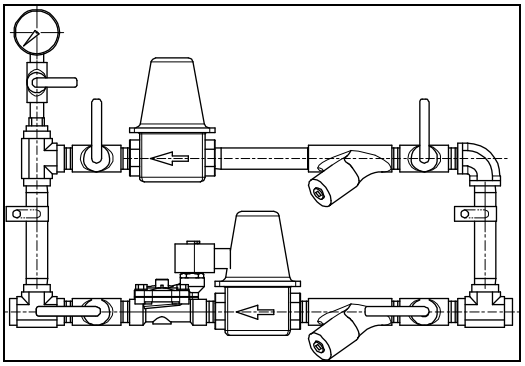

Raw Water Supply Installation (Cont)

Check Raw Water Pressure Regulator Setpoints (Cont)

NOTE: The heat exchanger is rated at 414 kPa [60 psig].

Adjust the bypass pressure regulator for 414 kPa [60 psig] or slightly less.

Close the bypass line inlet valve.

NOTE: Use the correct voltage for unit.

Provide a temporary 12 VDC standard (24 VDC optional) power source for the solenoid valve at Pin 13 and Pin 17. Refer to Drawing 10423 Sheet 1 in Section 13.

Open the normal line inlet and outlet valves.

Adjust the normal pressure regulator for 414 kPa [60 psig] or slightly less.

Remove the power jumper and reconnect the wiring.

Re-install the raw water piping from the manifold to the heat exchanger. Refer to Drawing 9634 in Section 13.

Test the pressure regulator setpoints with water flowing through the heat exchanger. Trim the setpoints if required.

Remove the temporary water supply to the manifold.

Re-install the raw water piping at the pump.

Battery and Electrical Installation

Overview

Two redundant sets of batteries must be supplied for the selected operating voltage (12 VDC standard or 24 VDC optional).

Batteries must meet the requirement listed in Electrical System Specifications in Section 10.

Batteries may be supplied by Cummins FirePower as an option or may be supplied by the customer.

Refer to National Fire Protection Association NFPA20-2003 Chapter 11 for battery and battery charger requirements for installations in the USA.

Battery Installation

Install the redundant sets of batteries in a well ventilated or otherwise protected location. Provide adequate room for servicing or replacing the batteries. Provide protection from extremes of temperature and weather.

Locate the batteries near the engine or increase the size of the conductors as required by applicable codes.

Ensure that the batteries are configured properly for either 12 VDC standard or 24 VDC optional operations as appropriate.

Battery Wiring Installation

NOTE: Install the wiring in accordance with applicable codes and specifications.

Install the Loose Wire Kit wires. Refer to Drawing 9767 in Section 13.

If purchased, install the optional battery cable kit (Cummins FirePower Part No. 9609). Otherwise, install equivalent customer supplied wiring.

Signal and Control Installation

NOTE: Install signal and control wiring at Terminal Board TB. Refer to Drawing 10423 Sheet 1 in Section 13.

Ensure that the fire control system is properly installed and configured as per the manufacturer's instructions.

Complete the customer-supplied fire pump controller wiring as per the manufacturer's instructions.

NOTE: Do not connect more than two wires at any point on the fire pump engine control panel terminal board. If necessary, add a grounding terminal board at the fire control system.

Connect the control power from the fire pump controller at TB-1 (+) and TB-11 (-). This power source is necessary for fire pump operations while in the AUTO mode.

Connect the two redundant crank signals from the fire pump controller to TB-9 (Crank Battery A) and to TB-10 (Crank Battery B). Connect the signal ground to TB-11.

Connect the Crank Terminate input to the fire pump controller from TB-2 with signal ground at TB-11. This 12 or 24 VDC signal is present when the engine is running. This signal indicates that the engine has started and that the crank command from the fire pump controller should stop immediately.

Connect the remote overspeed alarm input to the fire pump controller from TB-3. This 12 or 24 VDC signal is present when the overspeed switch has operated. If this event occurs, the fire pump engine will stop. The local RESET button must be pressed in order to restart the engine.

Connect the Low Oil Pressure alarm input to the fire pump controller from TB-5. This 0 VDC grounded signal is present when the oil pressure has dropped below the 110 kPa [16 PSIG] setpoint. The engine will continue to operate but immediate attention is necessary in order to prevent excessive damage to the engine or catastrophic engine failure.

Connect the High Water Temperature alarm input to the fire pump controller from TB-5. This 0 VDC grounded signal is present when the engine is running and the coolant temperature has risen above the 93 ^{o}C [200 ^{o}F] setpoint. The engine will continue to operate but immediate attention is necessary in order to prevent excessive damage to the engine or catastrophic engine failure.

If used, provide permanently installed redundant battery charging systems with connections at TB 6 and TB-8 (+) and TB-11 (-). TB-6 (+) and TB-8 (+) and TB-11 (-) should also be used for remote battery voltage indications at the fire control system or elsewhere.

Ensure electrical continuity and adequate insulation resistance for the installed wiring.

Provide the initial charge on the redundant batteries as per the battery charger's instructions.

Check that both voltmeters on the local control panel indicate the approximate battery voltage.

Coolant System Preparation

Check Cooling System Integrity

NOTE: Refer to Drawing 8704 (CFP59-F10, F20, F40, F50), Drawing 8705 (CFP59-F15, F25) Drawing 8706 (CFP59-F45), or Drawing 8713 (CFP59-F55) in Section 13 for hose arrangement.

Check that all coolant hoses are properly installed and that the clamps are tight.

Check that the aftercooler vent valve is open.

Check that the coolant drain petcock is closed.

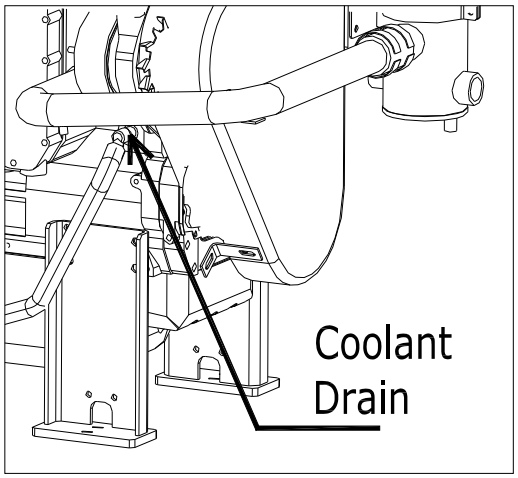

Add Coolant

Remove the pressure cap (Cummins Fire Power Part Number 11407) from the heat exchanger.

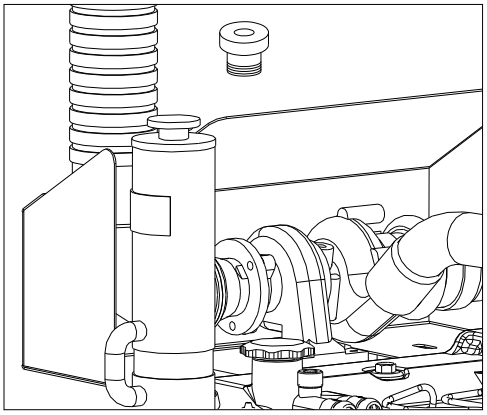

Refer to Cooling System Specifications and Coolant Recommendations and Specifications in Section 10.

NOTE: Use a mixture of at least 50 percent antifreeze and 50 percent water.

NOTE: Close the aftercooler coolant vent when coolant level reaches the vent.

Add coolant until the coolant level is just below the fill tube in the coolant heat exchanger.

Check for leaks. Correct any leaks.

Install the pressure cap on the heat exchanger.

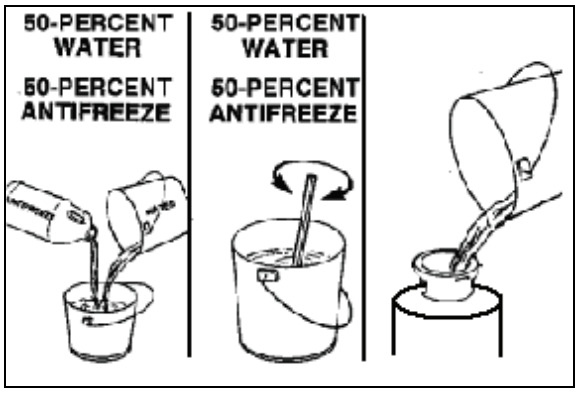

Coolant System Preparation (Cont)

Check Raw Water Supply Lineup

CAUTION

The raw water lines to and from the fire pump must be open, and there must be sufficient water to the heat exchanger when the engine has started. Insufficient water supply will cause overheating, resulting in engine failure.

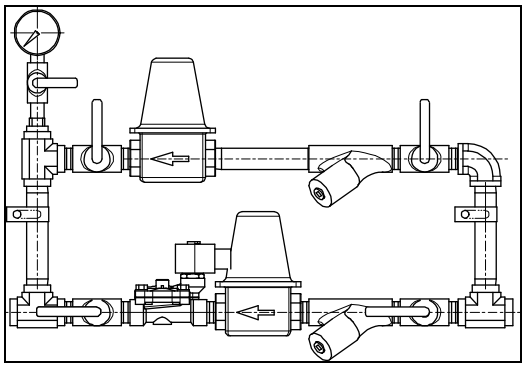

Check that the pressure gauge isolation valve is open.

NOTE: The upper line is the bypass line. The lower line with the solenoid valve is the normal line.

Check that the bypass line outlet valve is closed.

Check that the normal line inlet valve is open.

Check that the normal line outlet valve is open.

Lubricating Oil System Preparation

Add Lubricating Oil

NOTE: For oil requirements, refer to Lubricating Oil System Specifications and Lubricating Oil Recommendations and Specifications in Section 10. No change in oil viscosity or type is needed for new or newly rebuilt engines.

Fill the crankcase with lubricating oil to the “H” (high) mark on the dipstick.

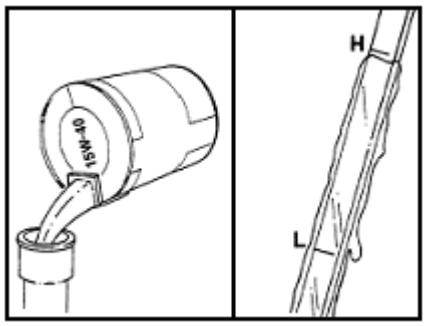

Prime the Turbocharger

CAUTION

New turbochargers must be pre-lubricated before startup. Failure to pre-lube the turbochargers will result in turbocharger bearing failure.

Remove the air intake filter assembly. Refer to Intake Air Filter Removal/Installation in Section 7.

Remove the turbocharger oil inlet line from the turbocharger bearing housing.

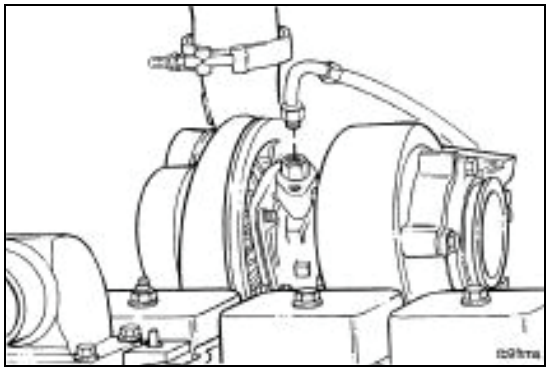

NOTE: Rotate the turbine wheel to allow oil to enter the bearing housing. Any excess oil will drain through the oil drain line.

Lubricate the bearings by pouring 59 to 89 ml [2 to 3 oz] of clean engine lubricating oil into the turbocharger oil supply line fitting.

Reconnect the turbocharger oil inlet line.

Tighten the oil supply line.

Torque Value: 24 N•m [18 ft-lb]

Install the air intake filter assembly. Refer to Intake Air Filter Removal/Installation in Section 7.

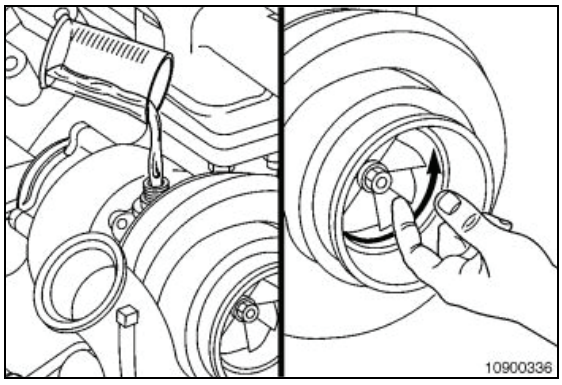

Fuel System Preparation (CFP59-F10, F20, F40, F50 Only)

Fill the Fuel Filter

Unscrew the combination fuel filter assembly and remove it from the engine.

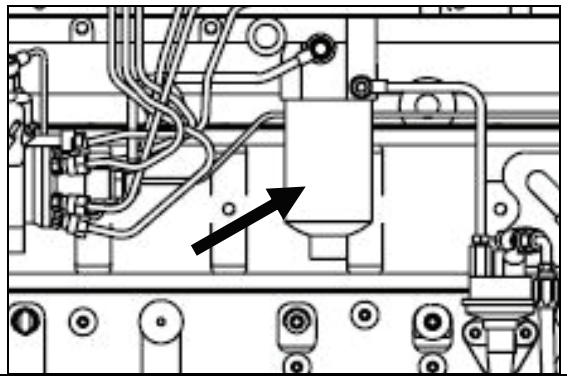

If open, close the air/water separator drain cock.

Lubricate the o-ring seal with clean lubricating oil.

NOTE: Refer to Fuel Recommendations and Specifications in Section 10 for fuel requirements.

Fill the fuel element with diesel fuel.

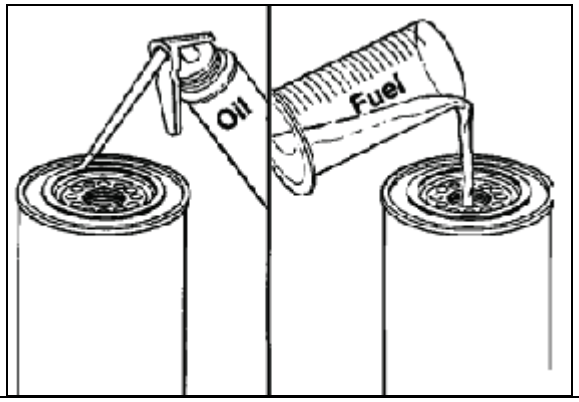

CAUTION

Mechanical over-tightening will distort the threads, filter element seal or filter can.

Install the filter on the filter head.

Tighten the filter until the gasket contacts the filter head surface.

Tighten the filter an additional one-half to three-fourths of a turn, or as specified by the filter manufacturer.

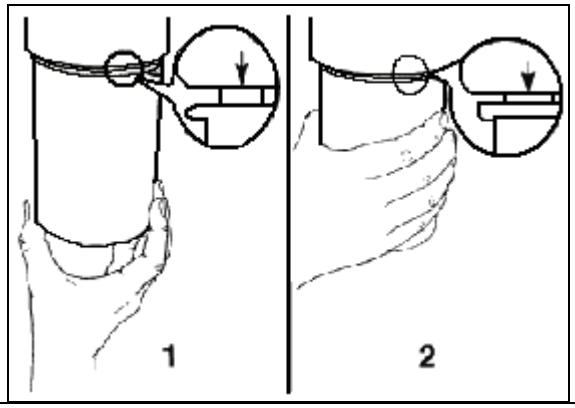

Fuel System Preparation (CFP59-F10, F20, F40, F50 Only) (Cont)

Fill the Fuel Tank

NOTE: Refer to Fuel Recommendations and Specifications in Section 10 for fuel requirements.

Ensure that the fuel tank and piping is clean.

Fill the fuel tank with fuel.

Fill the fuel lines to the engine and fill the fuel pre-filter.

Tighten all fuel supply line fittings to stop possible suction leaks.

Bleed the Engine Fuel Lines

Loosen the banjo connector bleed screw at the fuel filter housing.

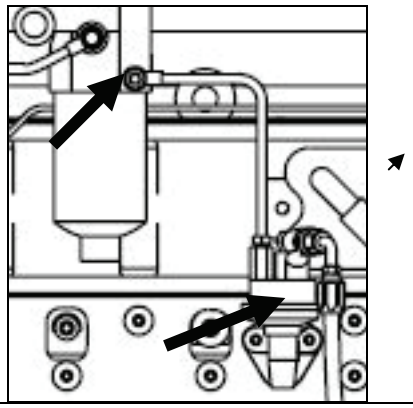

Operate the hand lever on the fuel lift pump until the fuel flowing from the bleed screw fitting is free of air.

Tighten the bleed screw.

Torque Value: 9 N•m [80 in-lb]

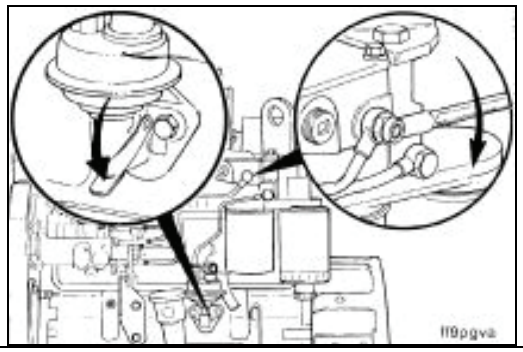

Fuel System Preparation (CFP59-F15, F25, F45 Only)

Fill the Fuel Filter

Unscrew the combination fuel filter assembly and remove it from the engine.

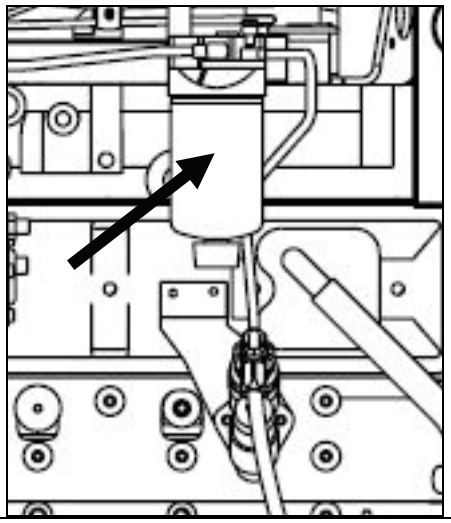

If open, close the air/water separator drain cock.

Lubricate the o-ring seal with clean lubricating oil.

NOTE: Refer to Fuel Recommendations and Specifications in Section 10 for fuel requirements.

Fill the fuel element with diesel fuel.

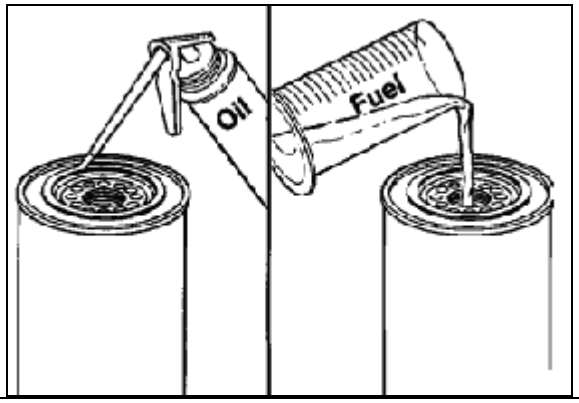

CAUTION

Mechanical over-tightening will distort the threads, filter element seal or filter can.

Install the filter on the filter head.

Tighten the filter until the gasket contacts the filter head surface.

Tighten the filter an additional one-half to three-fourths of a turn, or as specified by the filter manufacturer.

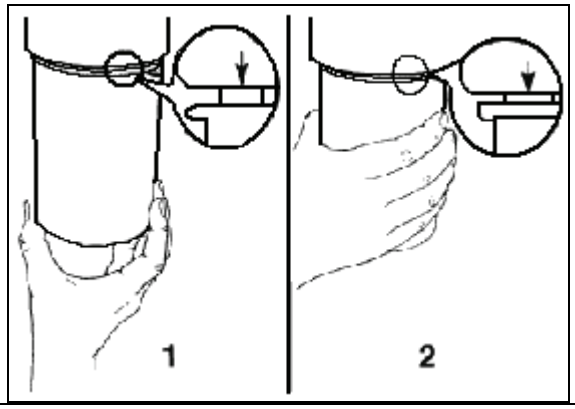

Fuel System Preparation (CFP59-F15, F25, F45 Only) (Cont)

Fill the Fuel Tank

NOTE: Refer to Fuel Recommendations and Specifications in Section 10 for fuel requirements.

Ensure that the fuel tank and piping is clean.

Fill the fuel tank with fuel.

Fill the fuel lines to the engine and fill the fuel pre-filter.

Tighten all fuel supply line fittings to stop possible suction leaks.

Bleed the Engine Fuel Lines

Loosen the banjo connector bleed screw at the fuel filter housing.

Operate the plunger on the fuel lift pump until the fuel flowing from the fitting is free of air.

Tighten the bleed screw.

Torque Value: 9 N•m [80 in-lb]

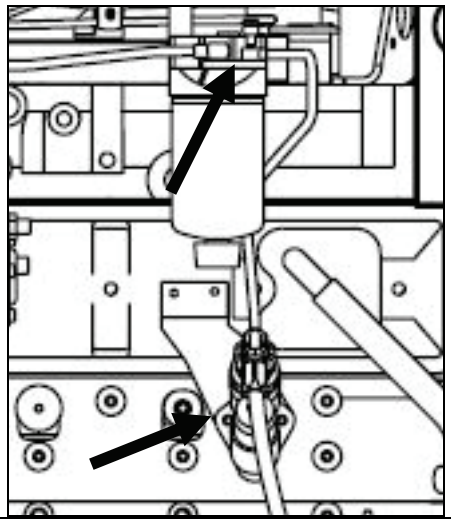

Fuel System Preparation (CFP-F55 Only)

Fill the Fuel Filter

Unscrew the combination fuel filter assembly and remove it from the engine.

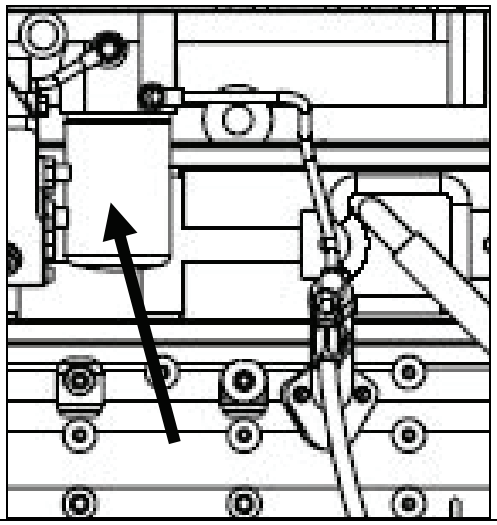

If open, close the air/water separator drain cock.

Lubricate the o-ring seal with clean lubricating oil.

NOTE: Refer to Fuel Recommendations and Specifications in Section 10 for fuel requirements.

Fill the fuel element with diesel fuel.

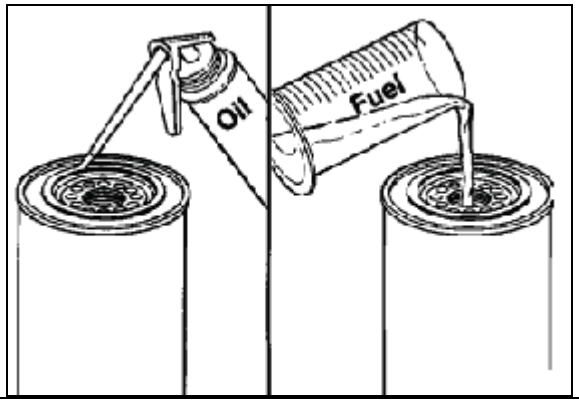

CAUTION

Mechanical over-tightening will distort the threads, filter element seal or filter can.

Install the filter on the filter head.

Tighten the filter until the gasket contacts the filter head surface.

Tighten the filter an additional one-half to three-fourths of a turn, or as specified by the filter manufacturer.

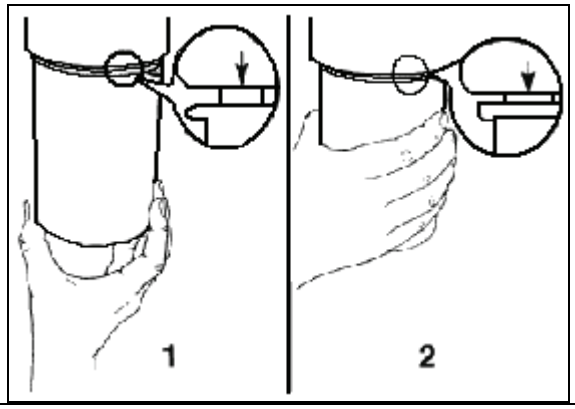

Fuel System Preparation (CFP59-F55 Only) (Cont)

Fill the Fuel Tank

NOTE: Refer to Fuel Recommendations and Specifications in Section 10 for fuel requirements.

Ensure that the fuel tank and piping is clean.

Fill the fuel tank with fuel.

Fill the fuel lines to the engine and fill the fuel pre-filter.

Tighten all fuel supply line fittings to stop possible suction leaks.

Bleed the Engine Fuel Lines

Loosen the banjo connector bleed screw at the fuel filter housing.

Operate the plunger on the fuel lift pump until the fuel flowing from the fitting is free of air.

Tighten the bleed screw.

Torque Value: 9 N•m [80 in-lb]

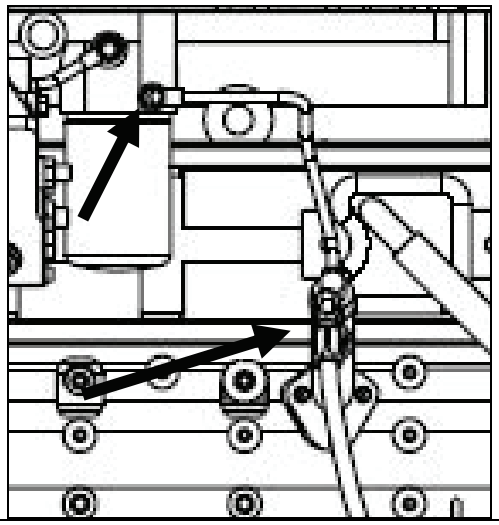

Pre-Start Inspections

Perform a visual inspection as follows:

- Check that there is no apparent damage and that all components are installed.
- Check that the drive belt is properly installed.
- Check that all hoses and tubes are properly installed.
- Check that all electrical connections are properly installed.
- Check that the fire pump is properly installed as per the pump manufacturer's instructions, is correctly aligned, and is free to rotate.

Pre-Lubricate the Engine

Disconnect the connector at the electric fuel solenoid (Fuel Shutoff Valve).

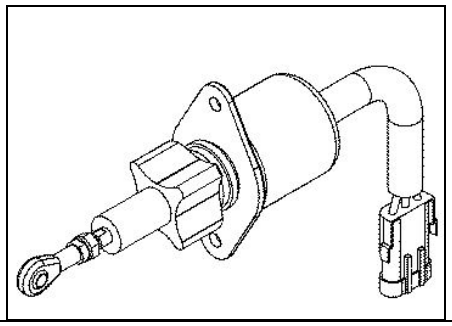

Press the MANUAL position on the AUTO/MANUAL rocker switch.

NOTE: Monitor engine oil pressure on the local control panel. Some pressure indication is expected. Also, the low oil pressure light should go off.

Crank the engine about two revolutions using either the CRANK BATT A or the CRANK BATT B switch positions.

Repeat a second time if oil pressure did not register on the gauge.

NOTE: Troubleshoot as per Lubricating Oil Pressure Low in Section 12 if oil pressure did not register on the gauge.

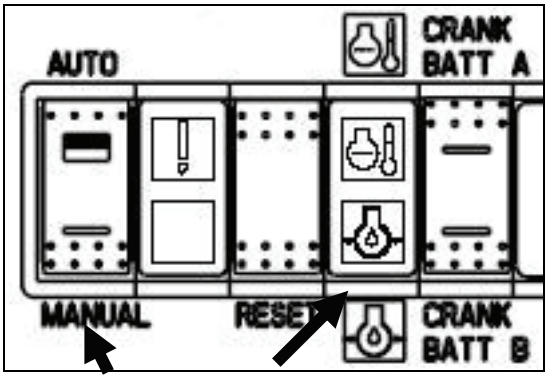

When pre-lubrication has been accomplished, reconnect the connector at the fuel injection pump solenoid (Fuel Shutoff Valve).

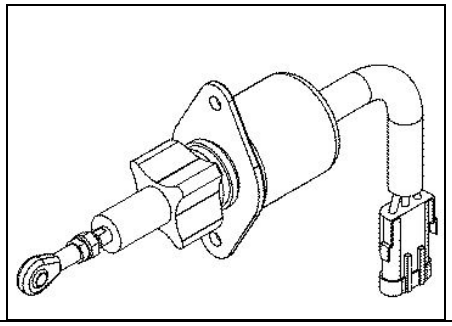

Lubricate Zerk Fittings on Auxiliary Drive Shaft

Some lubrication loss may occur during transport and storage. It is recommended that all drive shafts be re-lubricated upon installation.

Grease zerk fittings as shown.

See Lubricating Oil Recommendations and Specifications in Section 10 for grease specifications.

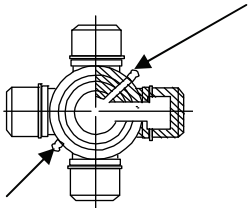

Check Engine to Pump Alignment

Ensure engine position is centered on Frame side to side within +-1/32”, by measuring outside of frame side to engine support leg mounting pad. (Compare two front engine supports and Two back engine supports).

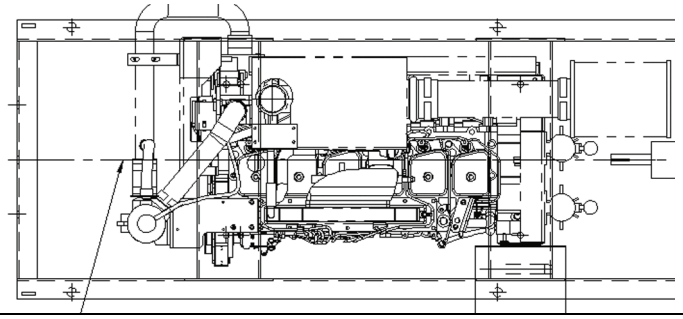

Align engine centerline to pump centerline within +-1/32”.

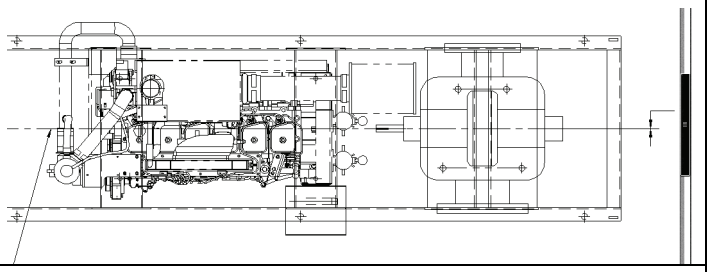

The pump centerline to the engine crank centerline (in vertical plane) is to be ½” +0, -1/4” offset.

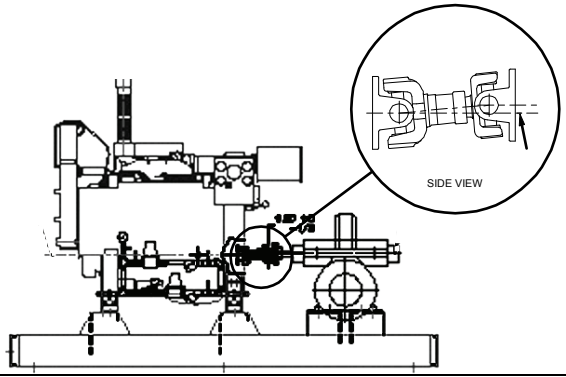

Auxiliary Drive shaft mounting flanges must be parallel within 1.5 degrees.

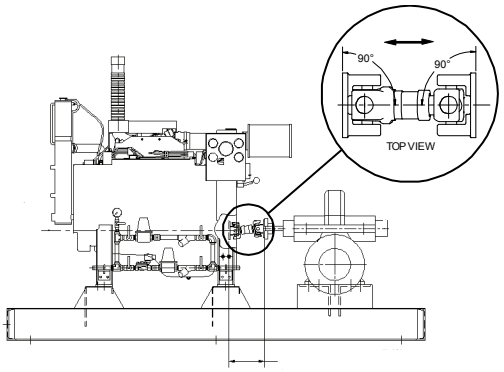

Initial Start-Up

NOTE: Contact personnel responsible for the fire protection system before starting and to obtain approval to service or repair the system.

Check the Raw Water Valves

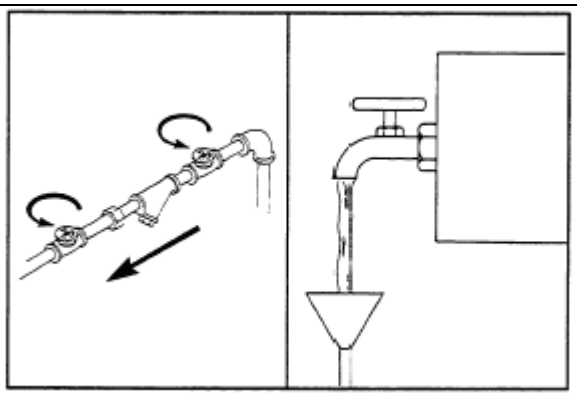

CAUTION

The raw water lines to and from the fire pump must be open, and there must be sufficient water to the heat exchanger when the engine has started. Insufficient water supply will cause overheating, resulting in engine failure.

Align raw water supply to the raw water supply valves.

Align drainage from the heat exchanger raw water outlet.

Open the raw water supply valves as shown.

Check the Engine Coolant Supply

Close all cooling system drains.

Verify that the vents are opened.

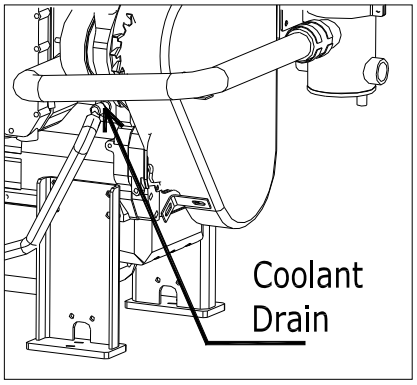

Remove the coolant tank cap.

Check coolant level.

Cold coolant level should be between the bottom of the tube and above the top of the heat exchange coils.

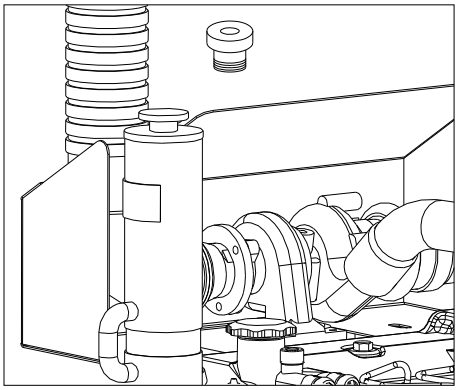

Initial Start-Up (Cont)

Add coolant if necessary. Use a mixture of at least 50 percent antifreeze and 50 percent water.

Replace the coolant tank cap.

Make a visual check for coolant leaks.

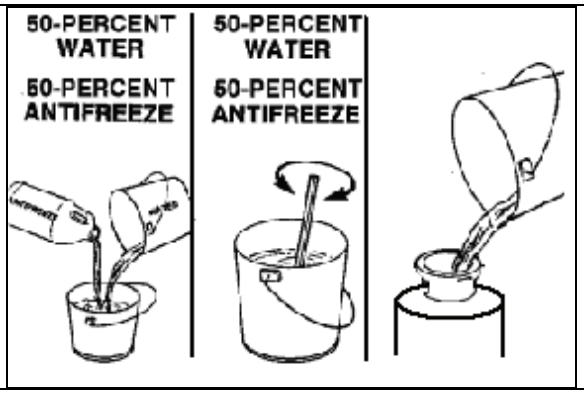

Prime the Fuel System:

Fill the fuel filter (see Fuel Recommendations and Specifications in Section 10).

Remove the fuel pump suction line and wet the gear pump gears with clean lubricating oil.

Check and fill the fuel tanks.

Check the injectors to be sure they are properly adjusted.

Check Initial Crankcase Oil Level:

CAUTION

Never operate the engine with the oil level below the low ("L") mark or above the high ("H") mark on the dipstick.

Check the oil level.

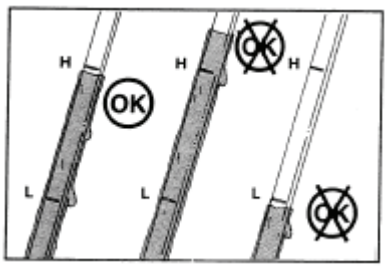

NOTE: No change in oil viscosity or type is needed for new or newly rebuilt engines.

If below the low mark, fill the crankcase to the low "L" (low) mark on the dipstick.

See Lubricating Oil Recommendations and Specifications in Section 10 for oil specifications.

See the Lubricating Oil System Specification for quantity that may be required.

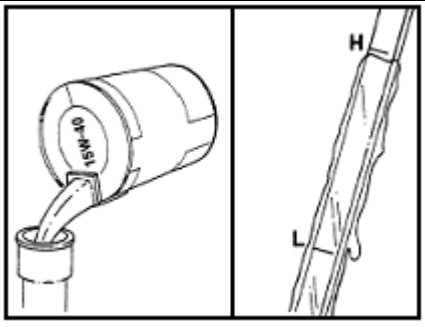

Initial Start-Up (Cont)

Pre-Lubricate the Turbocharger:

CAUTION

New turbochargers must be pre-lubricated before startup. Failure to pre-lube the turbochargers will result in turbocharger bearing failure.

Remove the turbocharger oil inlet line.

Pre-lubricate the housing by adding 50 to 60 cc (2 to 3 oz.) of clean engine lubricating oil.

Replace the line.

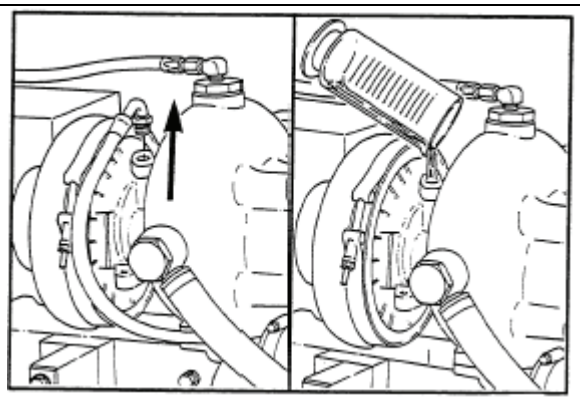

Pre-Lubricate the Engine

NOTE: Do not prime the engine lubricating system from the by-pass filter.

On the top of the fuel pump, disconnect the electric fuel solenoid. Make sure that the fuel pump solenoid wire terminal does not touch the engine.

Close the fuel shutoff valve from the fuel tank to prevent the engine from starting.

Prime the engine lubricating system until a 30 psi [207 kPa] minimum pressure is obtained.

NOTE: Use the fire pump controller or manual setting from the gauge panel to crank the engine through two cranking cycles.

Crank the engine at least 15 seconds, while maintaining the external oil pressure at a minimum of 15 psi [103kPa].

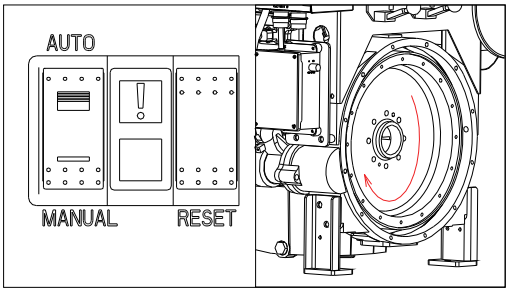

Initial Start-Up (Cont)

CAUTION

Never operate the engine with the oil level below the low (“L”) mark or above the high (“H”) mark on the dipstick.

Check the oil level again.

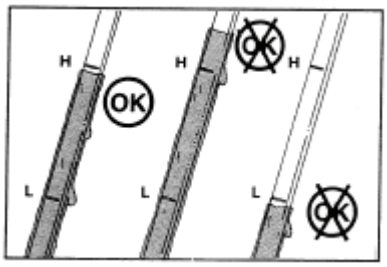

NOTE: No change in oil viscosity or type is needed for new or newly rebuilt engines.

If below the high mark, fill the crankcase to the high “H” (high) mark on the dipstick.

See Lubricating Oil Recommendations and Specifications in Section 10 for oil specifications.

See the Lubricating Oil System Specification for quantity that may be required.

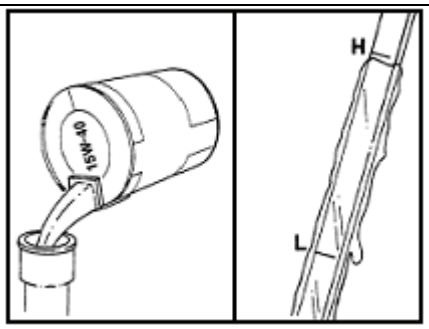

Initial Test Run

Move the throttle lever to mid-speed position.

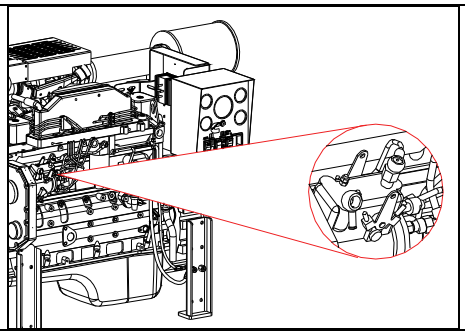

Initial Start-Up (Cont)

Start the engine.

Immediately move the throttle to the low idle position.

Allow the engine to operate at low idle speed (700 RPM).

Check the lubricating oil pressure within 15 seconds after the engine starts.

Operate the engine at set point for 8 to 10 minutes.

Check for leaks, unusual noises, or other indications of incorrect operation. Shut off the engine and correct any problems found during the inspection before proceeding.

After 8 to 10 minutes, stop the engine.

Check the engine oil and expansion tank coolant levels. Top off if necessary.

Clean the raw water strainer.

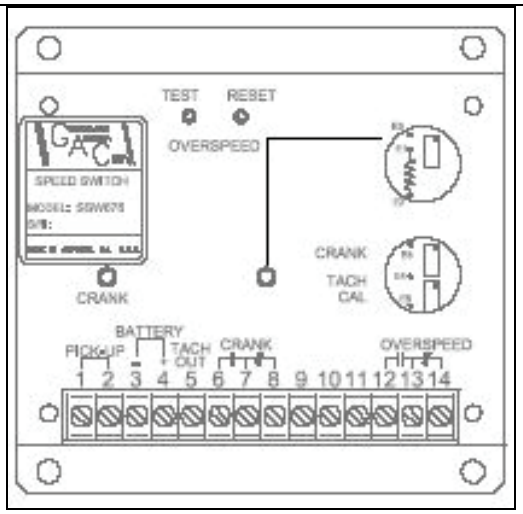

Supplemental Test Run

Start the engine.

Bring it to the fire pump required operating speed.

Adjust the raw water pressure regulator to obtain the required pressure.

Readjust the engine speed if necessary.

Initial Start-Up (Cont)

Overspeed Adjustment Procedure:

NOTE: Overspeed is already set at factory.

Resolve whether or not overspeed testing as per NFPA 20 is required. Verify that the overspeed is factory set for the specific speed (1760, 2100, 2360, 2600) as per the Factory Setting Tag.

Remove the calibrating screw cover from the electronic overspeed switch.

Turn the small screw on the potentiometer near the word “OVERSPEED” clockwise to increase trip speed.

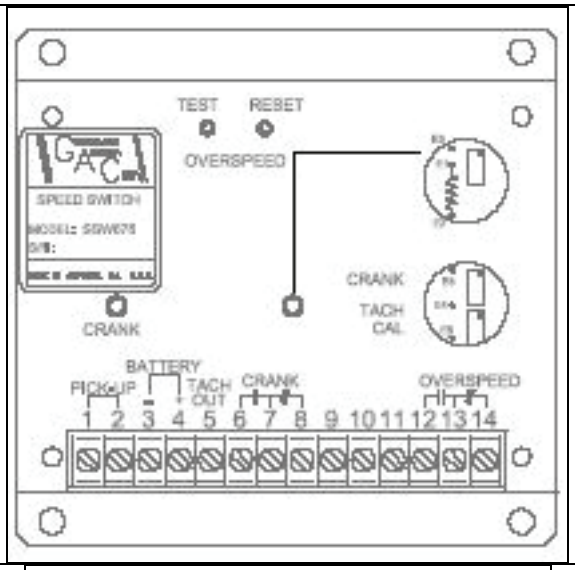

Move the throttle to the half throttle position. Start the engine and move the throttle to the minimum position.

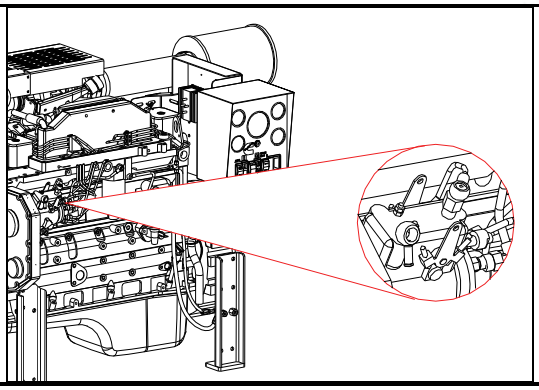

NOTE: Test button triggers overspeed at 10% below normal.

Depress the “TEST” button push-button on the inside of the panel.

Turn the screw to increase speed.

Verify overspeed trip/indications.

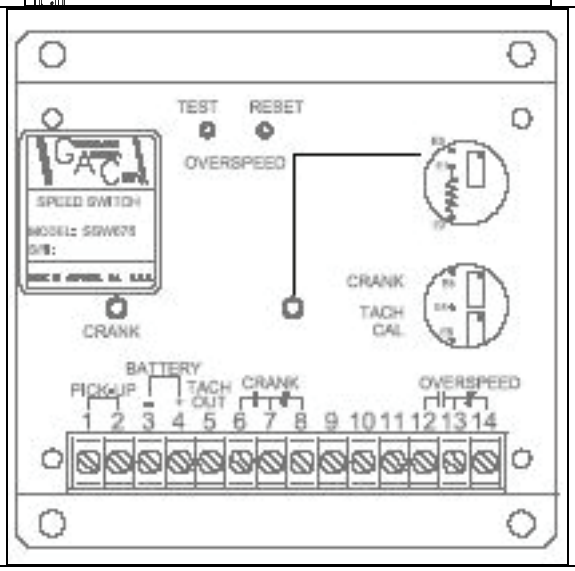

Initial Start-Up (Cont)

Operate the RESET switch on the front of the engine control panel.

Repeat if necessary to further adjust the overspeed stop setting.

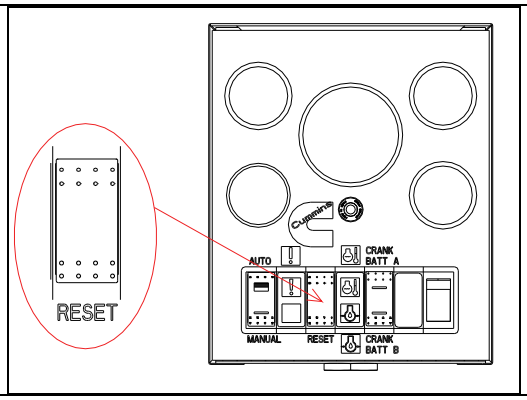

Start the engine.

Check operation at rated speed.

Shut off the engine.

Press the “AUTO” button so the fire pump will be ready to start automatically.

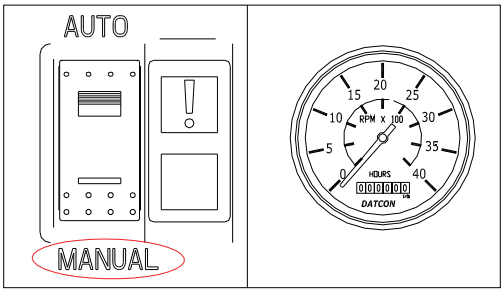

Completion

Support fire pump testing as per NFPA or applicable requirements.

Contact operating personnel responsible for fire protection system that engine is ready for service.

Obtain authorized signature of acceptance.

Initial Start

NOTE: The object of this test is to check that the engine starts and operates normally with oil pressure being displayed and raw water flow being established to the coolant heat exchanger. Operation at the factory-adjusted rated speed is also checked.

NOTE: If the engine does not start, vent the fuel system. Refer to Air in Fuel in Section 7, for instructions on how to vent the fuel system.

NOTE: If the engine still will not start, troubleshoot as per Engine Cranks But Will Not Start (No Exhaust Smoke) or Engine Difficult to Start or Will Not Start - Exhaust Smoke Present in Section 12.

NOTE: When the engine starts, immediately check that oil pressure is displayed. It should be on-scale within a few seconds. Stop the engine if oil pressure is not displayed within about 15 seconds.

NOTE: When the engine starts, immediately check that raw water flow is established through the coolant heat exchanger. Raw water flow should be established immediately but some delay may occur before the flow exits the heat exchanger drain connection.

NOTE: Rated speed is displayed on the Factory Setting Tag described in Section 2.

NOTE: If the engine fully loaded, it should operate at rated speed. Unloaded, it may operate about 10% faster. If it becomes necessary to adjust the engine's actual speed to match the rated value, refer to Rated Speed Setpoint Adjustment in this section.

FACTORY SETTING

ENGINE SPEED SETTING: _____
(@ HP SETTING)

OVERSPEED SWITCH SETTING: _____

Initial Start (Cont)

Start the engine using either the CRANK BATT A or the CRANK BATT B switch positions.

Check that the engine starts and operates at about rated speed.

NOTE: If oil pressure is not present or if the Low Oil Pressure Light does not go out, stop the engine and troubleshoot as per Lubricating Oil Pressure Low in Section 12.

Check that lubricating oil pressure is displayed within 15 seconds after the engine starts.

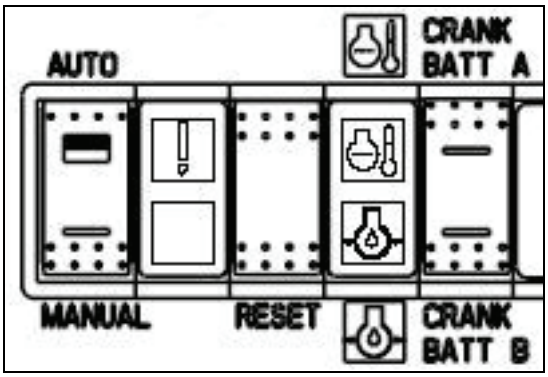

NOTE: Raw water should be flowing through the heat exchanger and water pressure shown on the local pressure gauge should be no more than 414 kPa (60 psig).

Check that raw water is flowing through the heat exchanger.

Check that raw water supply pressure is correctly adjusted.

Operate the engine for 8 to 10 minutes.

Initial Start (Cont)

Check for leaks, unusual noises, or other indications of incorrect operation.

Shut off the engine by pressing the AUTO position on the AUTO/MANUAL rocker switch and by momentarily pressing the RESET switch.

Check that raw water flow stops automatically shortly after the engine stops.

Correct any problems found during the inspection before proceeding.

Check the engine lubricating oil level. Refer to Check Lubricating Oil Level in Section 5. Top off if necessary.

Check the coolant heat exchanger's coolant level. Refer to Check Coolant Level in Section 5. Top off if necessary.

Check the raw water strainer. Clean the strainer if necessary.

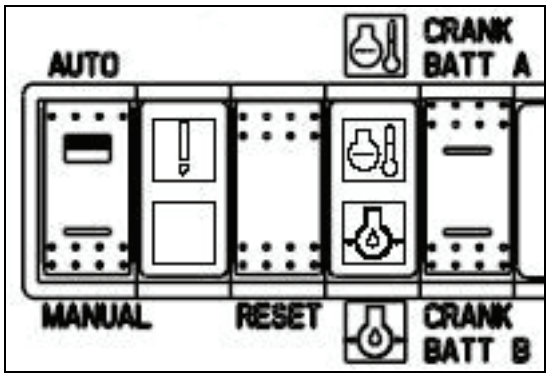

Second Start

NOTE: The object of this test is to check that the engine operates normally with coolant temperature being maintained. Oil pressure is checked at rated speed.

NOTE: Adjust engine operating speed as per Rated Speed Setpoint Adjustment in this section.

Start the engine and observe that it is operating at rated speed.

Check that the oil pressure is as specified in Lubricating Oil System Specifications in Section 10.

NOTE: If oil pressure is not within the rated range, troubleshoot as per Lubricating Oil Pressure High or Lubricating Oil Pressure Low in Section 12.

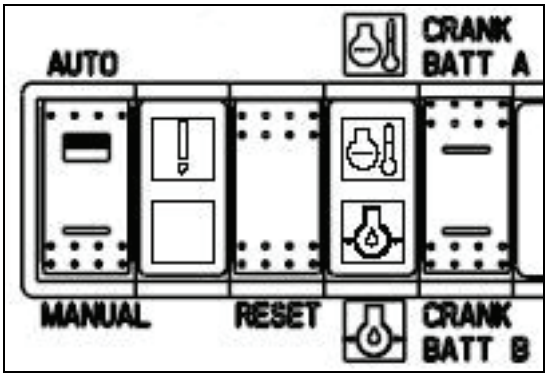

NOTE: If temperature does not stabilize, stop the engine and refer to Coolant Temperature Above Normal or Coolant Temperature Below Normal (Engine Running) in Troubleshooting Section 12.

Check that engine operating temperature stabilizes between about 82 and 95 ^{o}C [180 and 203 ^{o}F].

Shut off the engine.

Correct any problems found before proceeding.

Check the engine lubricating oil level. Refer to Check Lubricating Oil Level in Section 5. Top off if necessary.

Check the coolant heat exchanger's coolant level. Refer to Check Coolant Level in Section 5. Top off if necessary.

Check the raw water strainer. Clean the strainer if necessary.

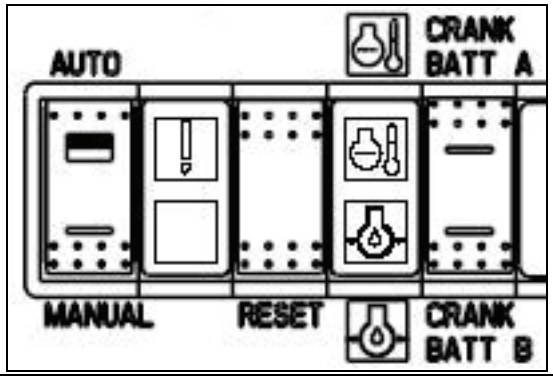

Rated Speed Setpoint Adjustment (CFP59-F10, F20, F40, F50 Only)

NOTE: If required, use this section to adjust the normal operating speed to the nameplate value.

NOTE: Rated speed is displayed on the Factory Setting Tag described in Section 2.

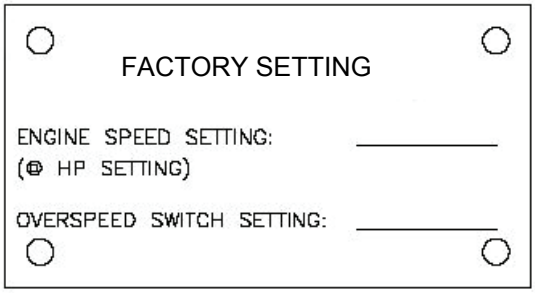

Start the engine.

Observe that the engine starts and accelerates the currently adjusted speed setpoint.

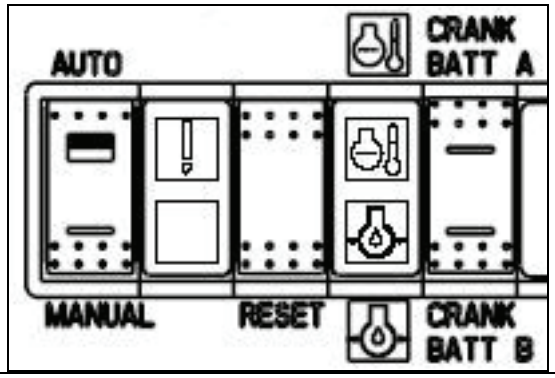

Adjust the speed setpoint to rated speed.

NOTE: Rated speed is adjusted by locating the threaded bolts on each side of the throttle bracket on the fuel pump side of the engine.

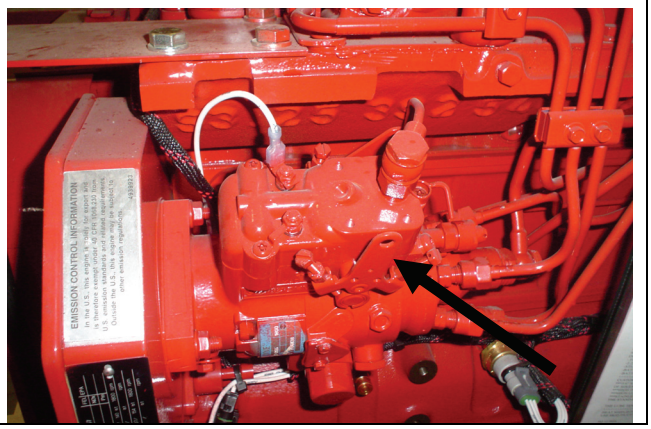

Rated Speed Setpoint Adjustment (CFP59-F10, F20, F40, F50 Only) (Cont)

To increase the speed, turn the bolt clockwise on the left side of the throttle bracket. The adjustment of the bolt will pivot the throttle bracket clockwise and will allow more fuel through the pump to speed up the engine.

The bolt on the right side of the bracket is for maximum speed and may also need to be adjusted if maximum speed cannot be reached.

Loosen lock nut and turn bolt counter-clockwise to increase speed. When rated speed is correct, tighten lock nut against stop.

To decrease the speed, turn the bolt counter-clockwise on the left side of the throttle bracket. The adjustment of the bolt will pivot the throttle bracket counter-clockwise and will allow less fuel to flow through the pump to slow down the engine.

When rated speed is correct, tighten the locking nuts against the stops.

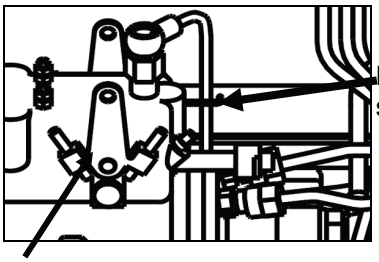

Note for rated speed adjustment

Emergency start as above location.

Stop the engine.

Start the engine.

Observe that the engine starts and accelerates to the rated speed setpoint.

Stop the engine. Repeat the above adjustment until the desired speed is attained.

Rated Speed Setpoint Adjustment (CFP59-F15, F25, F45 Only)

NOTE: If required, use this section to adjust the normal operating speed to the nameplate value.

NOTE: Rated speed is displayed on the Factory Setting Tag described in Section 2.

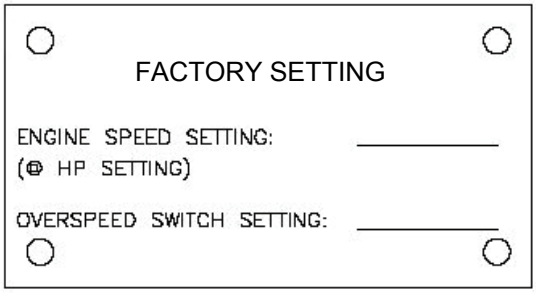

Start the engine.

Observe that the engine starts and accelerates the currently adjusted speed setpoint.

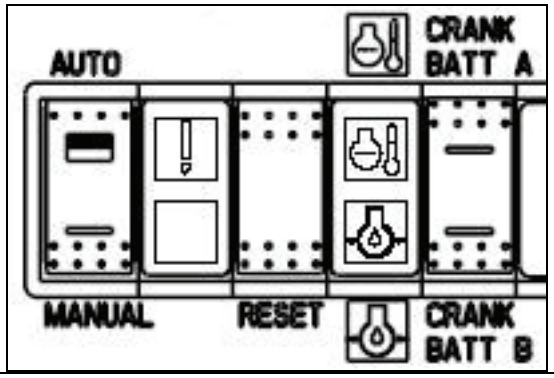

Adjust the speed setpoint to rated speed.

NOTE: Rated speed is adjusted by locating the threaded linkage rod on the fuel pump side of the engine.

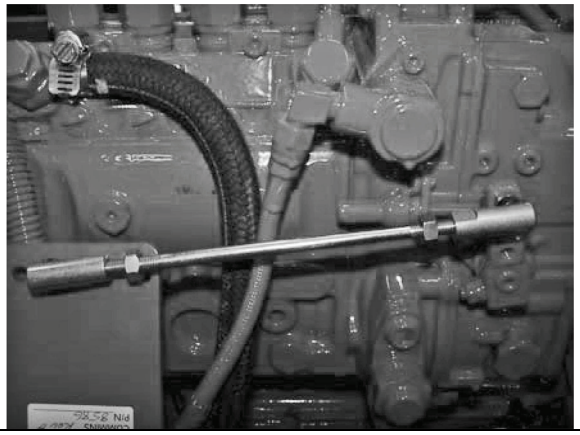

Rated Speed Setpoint Adjustment (CFP59-F15, F25, F45 Only) (Cont)

Loosen the locking nuts against the stops on the outside of the threaded rod. To increase the speed, turn the rod upwards toward the engine. The adjustment of the rod upward and towards the engine increases the actual length of the rod, thus allowing more fuel through the pump to speed up the engine.

To decrease the speed, turn the rod downward towards the floor. The adjustment of the rod towards the floor decreases the actual length of the rod, thus allowing less fuel through the pump to slow down the engine.

When rated speed is correct, tighten the locking nuts against the stops.

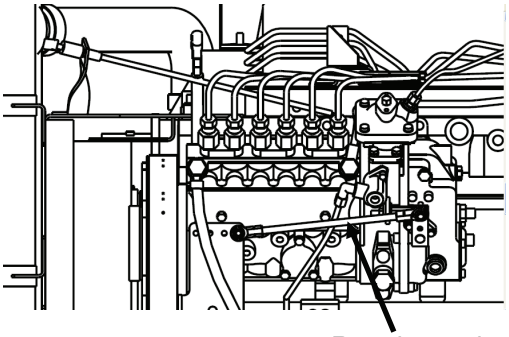

Stop the engine.

Start the engine.

Observe that the engine starts and accelerates to the rated speed setpoint.

Stop the engine. Repeat the above adjustment until the desired speed is attained.

Rated Speed Setpoint Adjustment (CFP59-F45 Only)

NOTE: If required, use this section to adjust the normal operating speed to the nameplate value.

NOTE: Rated speed is displayed on the Factory Setting Tag described in Section 2.

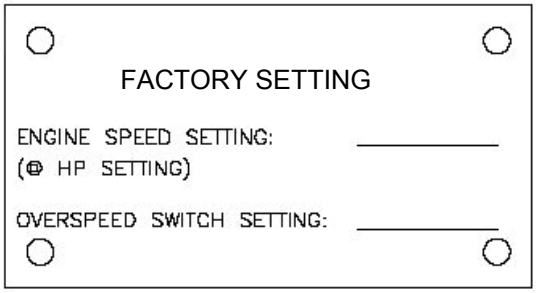

Start the engine.

Observe that the engine starts and accelerates the currently adjusted speed setpoint.

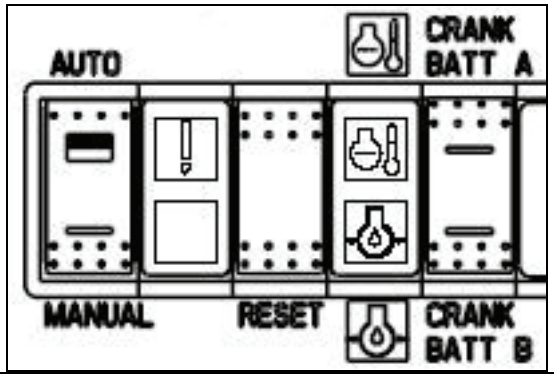

Adjust the speed setpoint to rated speed.

NOTE: Rated speed is adjusted by locating the threaded linkage rod on the fuel pump side of the engine.

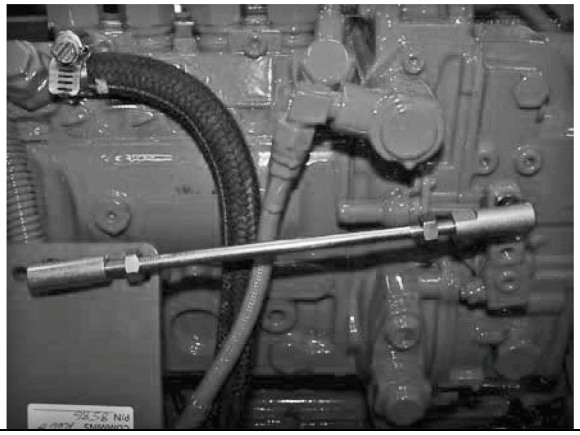

Rated Speed Setpoint Adjustment (CFP59-F45 Only) (Cont)

Loosen the locking nuts against the stops on the outside of the threaded rod. To increase the speed, turn the rod upwards toward the engine. The adjustment of the rod upward and towards the engine increases the actual length of the rod, thus allowing more fuel through the pump to speed up the engine.

To decrease the speed, turn the rod downward towards the floor. The adjustment of the rod towards the floor decreases the actual length of the rod, thus allowing less fuel through the pump to slow down the engine.

When rated speed is correct, tighten the locking nuts against the stops.

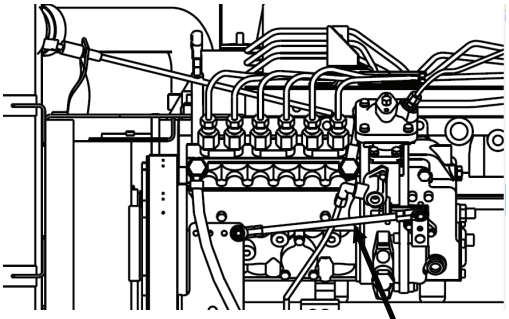

Stop the engine.

Start the engine.

Observe that the engine starts and accelerates to the rated speed setpoint.

Stop the engine. Repeat the above adjustment until the desired speed is attained.

Rated Speed Setpoint Adjustment (CFP59-F55 Only)

Note: If required, use this section to adjust the normal operating speed to the nameplate value.

NOTE: Rated speed is displayed on the Factory Setting Tag described in Section 2.

NOTE: Engine speed may be monitored by the tachometer located on the engine control panel. The tachometer indication can be checked mechanically using a mechanical tachometer or strobe light. It also may be checked electrically by monitoring the pulse input at the control panel. Refer to Drawing 10423 Sheet 1 in Section 13 for wiring information.

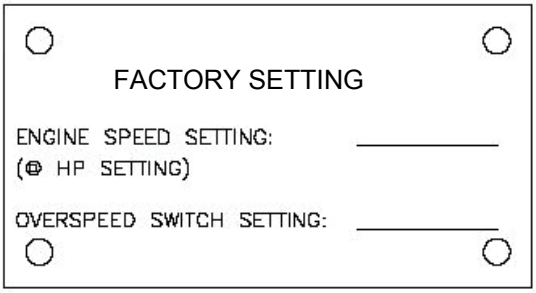

CAUTION

Adjust the engine for rated operating speed only when the pump is operating at rated flow. An unloaded pump will cause the engine to operate at up to 10% over rated speed.

Start the engine.

Observe that the engine starts and accelerates the currently adjusted speed setpoint.

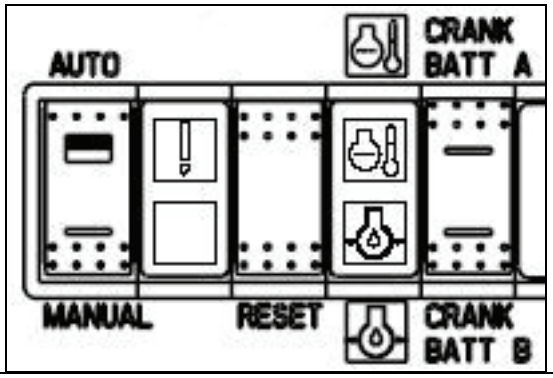

Loosen the backing nut (not shown) on the actuator stud.

NOTE: Tightening the nut (clockwise) on the actuator stud increases engine operating speed.

Adjust the adjusting nut while monitoring engine RPM.

When rated speed is obtained, tighten the backing nut.

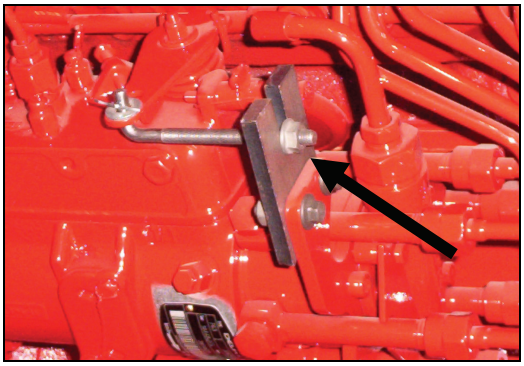

Stop the engine.

Start the engine.

NOTE: Repeat the adjustment procedure if required to obtain better adjustment.

Observe that the engine starts and accelerates to the rated speed setpoint.

Stop the engine.

Overspeed Setpoint Adjustment and Testing

Overview

Overspeed setpoint adjustment and testing is a repetitive process. Use the Adjustment Procedure to change the setpoint. Use the Test Procedure to check the setpoint. Repeat the adjustments and checks until the desired setpoint is demonstrated. When the overspeed setpoint is successfully demonstrated, then check that the engine operates normally while not being tested.

NOTE: The overspeed trip setpoint is displayed on the Factory Setting Tag described in Section 2.

NOTE: The overspeed setpoint must be set at between 115 and 120% of the engine's rated speed.

The speed switch located on the engine's local control panel has a TEST button which lowers the currently adjusted overspeed by 10%. Thus, an overspeed setpoint of 2112 rpm would be reduced to (2112 * 0.9 =) 1901 RPM when the test button is pressed.

FACTORY SETTING

ENGINE SPEED SETTING: _____
(@ HP SETTING)

OVERSPEED SWITCH SETTING: _____

Adjust the Speed Switch:

Lower the cover on the engine's local control panel.

Disconnect the engine speed sensor signal from PICK-UP terminals 1 and 2.

Connect a signal generator capable of providing between 0.25 to 120 VAC RMS signal to the switch. The signal must be proportional to the engine's rated speed.

Provide an overspeed signal at the specified overspeed switch setting frequency.

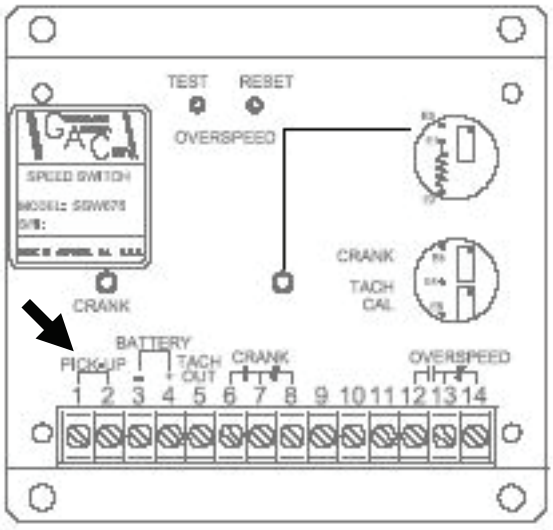

Overspeed Setpoint Adjustment and Testing (Cont)

Remove the calibrating screw cover from the electronic overspeed switch.

NOTE: Turn the small screw on the potentiometer near the word “OVERSPEED” clockwise to increase trip speed. Turn it counter-clockwise to reduce trip speed.

If the OVERSPEED light is illuminated with the signal present, perform the following steps:

Reduce the signal frequency.

Press the RESET button.

Turn the potentiometer clockwise to raise the setpoint.

Increase the signal frequency to setpoint.

With the OVERSPEED light off, slowly turn the potentiometer counter-clockwise until the light is just illuminated.

NOTE: Repeat the adjustments as required to make the finest adjustment practical.

When the setpoint is adjusted, perform the following steps:

Replace the screw cover at the potentiometer.

Disconnect the signal generator.

Reset the light.

Reconnect the speed sensor input.

Perform the Test Procedure below to check the effect of the adjustment.

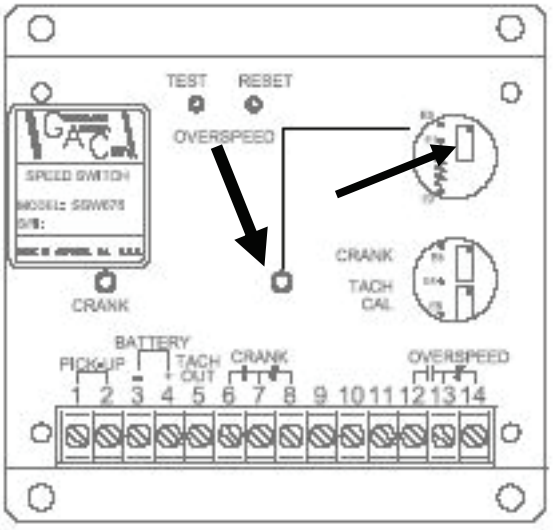

Overspeed Setpoint Adjustment and Testing (Cont)

Test Procedure

NOTE: The overspeed trip setpoint is displayed on the Factory Setting Tag described in Section 2.

FACTORY SETTING

ENGINE SPEED SETTING: _____
(@ HP SETTING)

OVERSPEED SWITCH SETTING: _____

Start the engine.

Observe that the engine starts and operates at about rated speed.

NOTE: Monitor engine speed on the tachometer. Record the observed engine speed when it trips. It must trip between 115 and 120% of rated speed.

NOTE: Do not exceed 120% of rated speed. If the engine does not trip at or below 120%, stop the engine and Adjust the Speed Switch.

Adjust the mechanical throttle adjustment to increase engine speed to the setpoint.

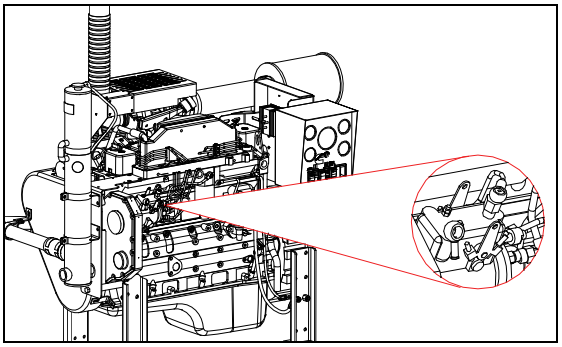

Observe that the engine stops automatically and that the overspeed trip light is illuminated.

Verify that the engine tripped at a speed between 115 and 120% of rated speed.

Press the RESET button on the speed switch.

Press the RESET switch on the front of the engine control panel.

Observe that the overspeed light has extinguished.

NOTE: If required by the local authority, restart the engine at the current mechanical throttle setpoint to demonstrate a run-away overspeed shutdown as specified by Underwriter's Laboratory UL 1247.

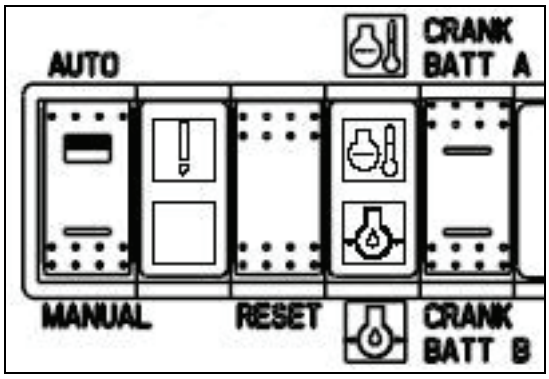

Overspeed Setpoint Adjustment and Testing (Cont)

Set/Check Normal Operation

Start the engine.

Adjust engine speed for rated value. Refer to Rated Speed Setpoint Adjustment in this section.

Stop the engine.

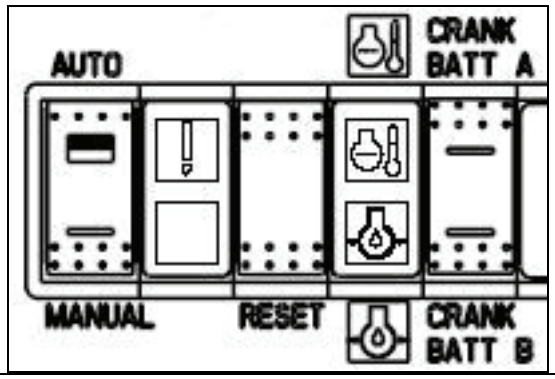

Crank Terminate Adjustment and Testing

NOTE: The crank terminate signal to the remote fire pump controller informs the controller that the engine has started. This allows the controller to terminate the selected crank signal to the engine. This crank terminate signal is produced by the overspeed switch in the engine's local control panel. The setpoint for the crank terminate signal is adjusted at the factory to a value above normal idling speeds but less than the rated speed. The setpoint should not require adjustment unless it is necessary to test the switch operation or to replace the overspeed speed switch.

NOTE: If using this procedure for troubleshooting, perform the test portion prior to making any adjustments.

Prepare

Place the fire protection system in a safe mode for engine service.

Place the AUTO/MANUAL rocker switch in the MANUAL position.

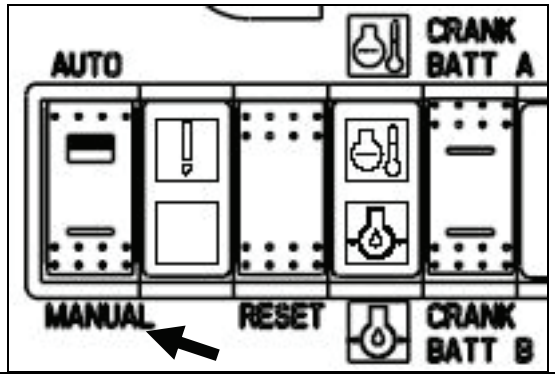

REMOVE BATTERY POWER BEFORE SERVICING ENGINE OR CONTROLS.

For safety reasons, both batteries must be disconnected before performing service on the Firepump Engine or on any of its controls. Before disconnecting the batteries, place the Firepump Controller in its appropriate service position in order to avoid a "Battery Failure" alarm.

Wear safety glasses when disconnecting batteries!

Next, disconnect both batteries at their terminals.

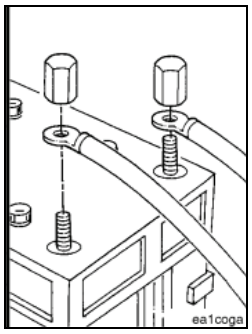

Crank Terminate Adjustment and Testing (Cont)

Adjust

NOTE: Refer to Drawing 10423 Sheet 1 in Section 13.

Open the engine's local control panel cover.

Disconnect the GRAY/RED (MPU +) wire from PICK-UP terminal 1 at the speed switch.

Disconnect the GRAY/BLK (MPU -) wire from PICK-UP terminal 1 at the speed switch.

Connect a signal or pulse generator to the switch inputs with the same signal polarity.

Adjust the pulse generator to about 1100 cycles or pulses per second.

Remove the cover from the speed switch CRANK/TACH CAL potentiometers.

If, with this signal, the CRANK LED is illuminated on the speed switch, turn the CRANK potentiometer E5 clockwise until the LED extinguishes.

Then, turn the CRANK potentiometer E5 slowly counterclockwise until the CRANK LED illuminates.

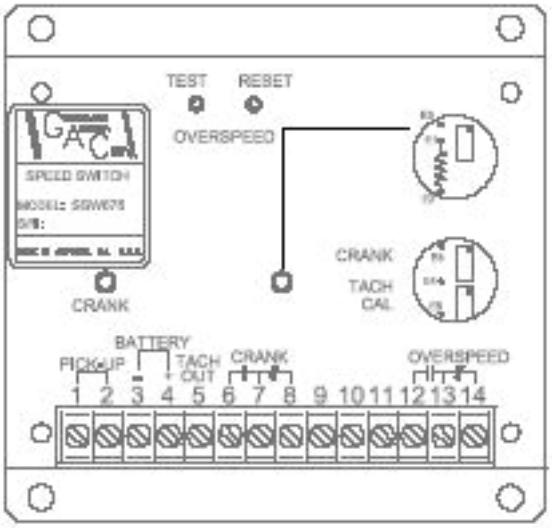

Replace the cover on the speed switch.

Remove the signal generator.

Connect the GRAY/RED (MPU +) wire at PICK-UP terminal 1 at the speed switch.

Connect the GRAY/BLK (MPU -) wire at PICK-UP terminal 1 at the speed switch.

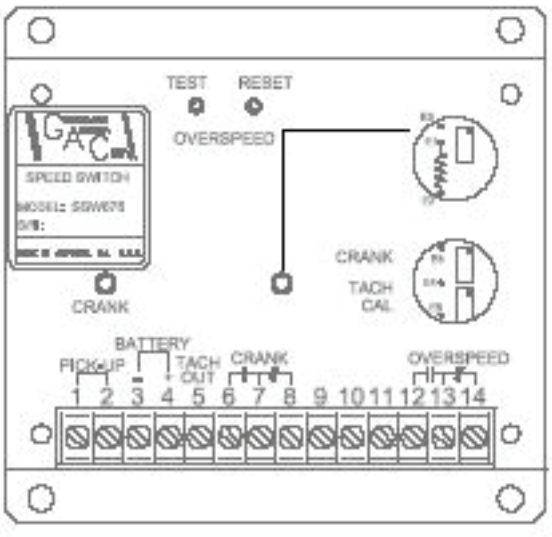

Crank Terminate Adjustment and Testing (Cont)

For safety reasons, both batteries must be re-connected before putting the engine and fire protection system controller back in service.

Wear safety glasses when reconnecting batteries!

Reconnect the batteries at their terminals after all service work has been completed.

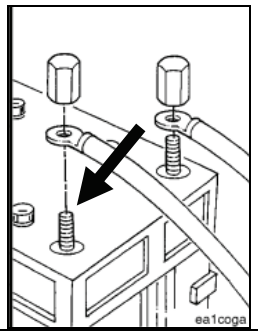

Test

NOTE: Monitor fire pump controller operations from the controller. Check for the crank terminate signal at the input terminals and observe that the controller removes the crank output to the engine.

Connect a digital voltmeter at crank terminate output of the local control panel between TB2 (+) and TB11 (-). Refer to Drawing 10423 Sheet 1 in section 13.

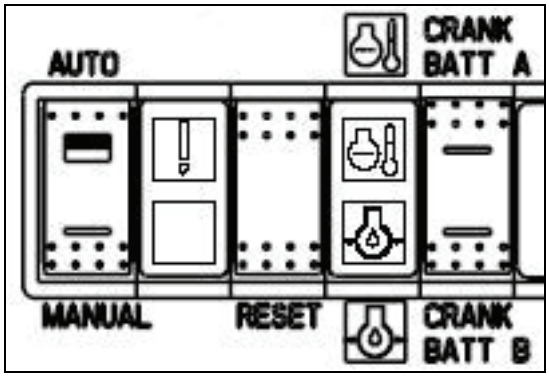

NOTE: The engine's rated speed is displayed on the Factory Setting Tag described in Section 2.

Place the AUTO/MANUAL rocker switch in the AUTO position.

Start the engine from the fire pump controller.

Observe that the engine starts and accelerates to about rated speed.

Observe that the CRANK terminal LED on the speed switch is illuminated.

Check that the local digital voltmeter indicates the 12 VDC standard (24 VDC optional) signal output voltage.

When testing is done, stop the engine.

Remove the digital voltmeter.

Close the cover on the engine control panel.

Isolated Acceptance Testing

Demonstrate the manual local start, operation, and shutdown of the fire pump from the engine's local starter-solenoid controls. Demonstrate that the engine will operate in the event of blown fuses or other faults in the local control panel. Demonstrate manual engine speed control. Manual raw water valve operations are required.

Demonstrate the manual local start, operation, and shutdown of the fire pump from the engine's control panel. Demonstrate that the engine starts, operates at speed, and stops in the event that the fire pump controller is not functioning.

Demonstrate the start of the fire pump engine using each battery set separately.

Demonstrate that the fire pump engine alternator operates while the engine is running. Demonstrate that any customer supplied battery charging systems operate when the engine is not running.

Integrated Acceptance Testing

Demonstrate the start-up, operation, and shutdown of the fire pump engine in response to operations of the customer-installed fire pump controller. Perform this testing with the testing of the fire pump controller.

Demonstrate that the fire pump controller provides design indications and/or alarms for simulated engine oil pressure, water temperature, and overspeed faults.

Demonstrate the actual operation of the crank terminate output from the overspeed switch.

Participate in any flushing, pressure testing, flow testing, or capacity testing required for the fire protection system.

Complete the Cummins Fire Power Start-Up Inspection (SUI) Checklist. This is available on the Cummins FirePower web site (www.cumminsfirepower.com/startup).

When these items have been demonstrated, contact operating personnel responsible for fire protection system that engine is ready for service.

General Operating Information

Cummins fire pumps are tested before being shipped from the factory and are ready to put to work in application regarding to fire emergencies.

Correct care of your engine will result in longer life, better performance, and more economical operation.

Follow the daily maintenance checks listed in Maintenance Guidelines, Section 4.

Check the water temperature and oil pressure indicators, warning lights, and other gauges daily to make sure they are operational.

Normal Remote Starting Procedure

The fire pump engine starts automatically upon receipt of the start command from the customer installed fire control panel. The remote command starts the engine when the AUTO/MANUAL rocker switch at the local; control panel is in the AUTO position. The remote start command consists of either the Crank A or the Crank B signal. Only one should be selected.

The engine continues to operate as long as the run signal is present. When the run signal is lost, the engine promptly stops.

When the engine starts, the crank terminate signal is sent to the fire control panel to indicate that the engine is running. How this is displayed depends upon the fire control panel manufacturer. This indication should be checked in the event that an automatic start is initiated. If the signal is not present, the engine can be started locally by using the Emergency Starting Procedure in this section.

The engine may be stopped locally by selecting the manual position on the AUTO/MANUAL rocker switch and by pressing the local RESET switch.

⚠CAUTION⚠

To prevent damage to the starter, do not engage the starting motor more than 15 seconds. Wait 15 seconds between each attempt to start.

Position the fuel shutoff, electrical switch, or mechanism control to the run position.

If the engine does not start after three attempts, check the fuel supply system. Absence of blue or white exhaust smoke during cranking indicates no fuel is being delivered.

Move the throttle position to idle as soon as the engine starts.

Engine oil pressure must be indicated on the gauge within 15 seconds after starting.

When starting a cold engine, increase the engine speed (rpm) slowly to make sure adequate lubrication is available to the bearings.

⚠CAUTION⚠

Do not idle the engine for excessively long periods. Long periods of idling (more than 10 minutes) can damage an engine because combustion chamber temperatures drop so low the fuel will not burn completely. This will cause carbon to clog the injector spray holes and piston rings, and can cause the valves to stick. If the engine coolant temperature becomes too low (60°C [140°F]), raw fuel will wash the lubricating oil off the cylinder walls and dilute the crankcase oil; therefore, all moving parts of the engine will not receive the correct amount of lubrication.

Engines used in fire pumps or standby service are expected to transition from crank to full load within a short period of time.

Normal Remote Starting Procedure (Cont)

WARNING

Do not operate a diesel engine where there are or can be combustible vapors. These vapors can be sucked through the air intake system and cause engine acceleration and overspeeding, which can result in a fire, an explosion, and extensive property damage. Numerous safety devices are available, such as air intake shutoff devices, to minimize the risk of overspeeding in which an engine, because of application, might operate in a combustible environment (from a fuel spill or gas leak, for example). Cummins Engine Company, Inc., does not know how you will use your engine. The equipment owner and operator, therefore, is responsible for safe operation in a hostile environment. Consult your Cummins Authorized Repair Location for further information.

CAUTION

Do not operate the engine at low idle for long periods. Long periods at low idle, more than 10 minutes, can damage an engine because combustion chamber temperatures will decrease and the fuel will not completely burn. This will cause carbon to build up around the injector spray holes and piston rings, which can cause the valves to stick. To avoid damage, operate the engine at higher idle.

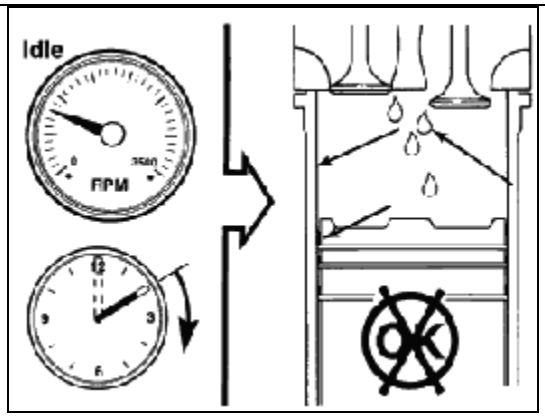

WARNING

Batteries can emit explosive gases. To avoid personal injury, always ventilate the compartment before servicing the batteries. To avoid arcing, remove the negative (-) battery cable first and attach the negative (-) battery cable last.

Normal Local Starting Procedure

Overview

The fire pump engine is started locally for testing and maintenance. Local starts for testing will be performed at rated speed. That is, the engine starts and promptly ramps up to operating speed. If it is necessary to operate the engine at idle speed for maintenance or troubleshooting, the engine speed must be manually reduced. After maintenance or troubleshooting, the speed must be manually reset to the rated value shown on the Factory Setting Tag in see Section 2.

Local Starting Procedure for Testing

⚠CAUTION⚠

To prevent damage to the starter, do not engage the starting motor more than 15 seconds. Wait 15 seconds between each attempt to start (electrical starting motors only).

Normal Local Starting Procedure (Cont)

Local Starting Procedure for Testing (Cont)

Start the Engine

Press the MANUAL position on the AUTO/MANUAL rocker switch.

Observe the battery voltages displayed on the engine control panel. Use the battery with the highest indicated voltage.

NOTE: Depress the selected switch for up to 15 seconds or until the engine starts. Repeat up to three times if necessary.

Start the engine using either the CRANK BATT A or the CRANK BATT B rocker switch positions.

NOTE: If the engine does not start after three attempts, check the fuel supply system. Absence of blue or white exhaust smoke during cranking indicates no fuel is being delivered.

Engine oil pressure must be indicated on the gauge within 15 seconds after starting.

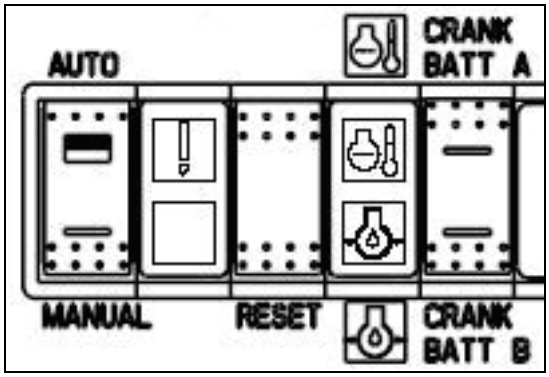

Stop the Engine

To stop the engine, select the AUTO position on the AUTO/MANUAL rocker switch and press the RESET switch.

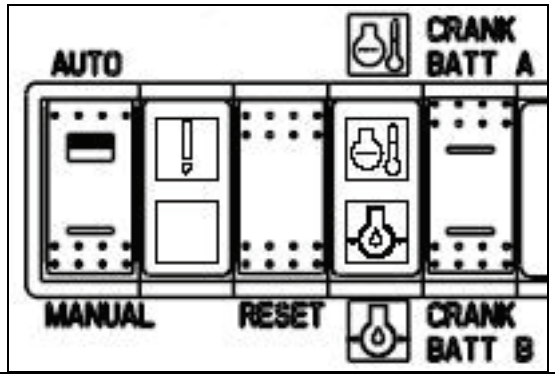

Normal Local Starting Procedure (Cont)

Local Starting Procedure for Maintenance or Troubleshooting

Engines used in fire pumps or standby service are expected to transition from crank to full load within a short period of time.

⚠CAUTION⚠

Do not idle the engine for excessively long periods. Long periods of idling (more than 10 minutes) can damage an engine because combustion chamber temperatures drop so low the fuel will not burn completely. This will cause carbon to clog the injector spray holes and piston rings, and can cause the valves to stick. If the engine coolant temperature becomes too low (60°C [140°F]), raw fuel will wash the lubricating oil off the cylinder walls and dilute the crankcase oil; therefore, all moving parts of the engine will not receive the correct amount of lubrication.

Adjust the fuel pump as per instructions to get idle speed.

Manually position the fuel pump at mid throttle position.

Press the MANUAL position on the AUTO/MANUAL rocker switch.

⚠CAUTION⚠

To prevent damage to the starter, do not engage the starting motor more than 15 seconds. Wait 15 seconds between each attempt to start (electrical starting motors only).

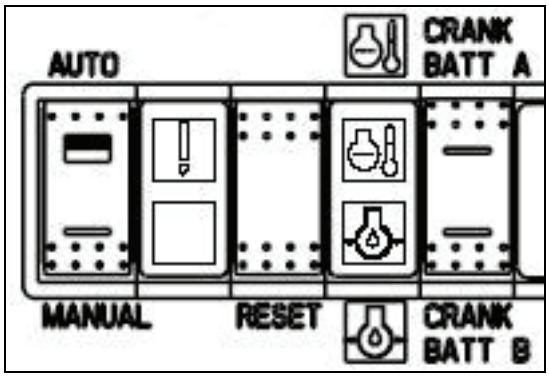

Start the engine using either the CRANK BATT A or the CRANK BATT B switch positions.

NOTE: If the engine does not start after three attempts, check the fuel supply system. Absence of blue or white exhaust smoke during cranking indicates no fuel is being delivered.

Engine oil pressure must be indicated on the gauge within 15 seconds after starting.

Normal Local Starting Procedure (Cont)

Local Starting Procedure for Maintenance or Troubleshooting (Cont)

CAUTION

Do not operate the engine at low idle for long periods. Long periods at low idle, more than 10 minutes, can damage an engine because combustion chamber temperatures will decrease and the fuel will not completely burn. This will cause carbon to build up around the injector spray holes and piston rings, which can cause the valves to stick. To avoid damage, operate the engine at higher idle.

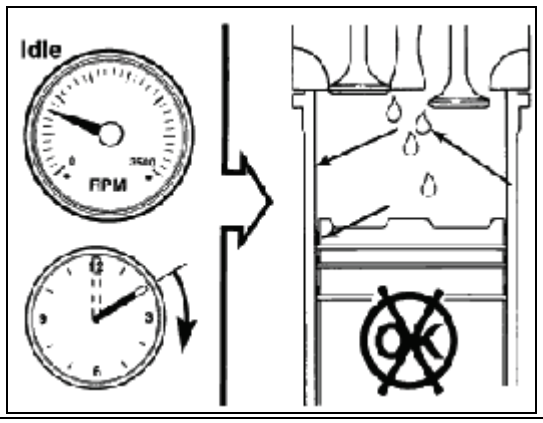

When the engine starts, immediately position the throttle linkage to an idle speed setting of about 700 RPM.

To stop the engine, select the AUTO position on the AUTO/MANUAL rocker switch and press the RESET switch.

Adjust the engine to operate at rated speed as per instructions in this section.

Jumpering the Batteries

NOTE: If a battery charging system is not provided, the engine can be started using known good batteries to provide a temporary power source. Once the engine is started, disconnect the added batteries and allow the engine's alternator to charge the existing batteries. It may take some time to charge the batteries with this method.

NOTE: For maintainable lead acid batteries as supplied by Cummins NPower, check the state of charge by the measurement of battery cell specific gravity. Refer to Battery Testing in Section 7 for more information.

WARNING

Batteries can emit explosive gases. To avoid personal injury, always ventilate the compartment before servicing the batteries. To avoid arcing, remove the negative (-) battery cable first and attach the negative (-) battery cable last.

CAUTION

When using jumper cables to start the engine, make sure to connect the cables in parallel: Positive (+) to positive (+) and ground (-) to ground (-).

The accompanying illustration shows a typical parallel battery connection. This arrangement, positive (+) to positive (+), doubles the cranking amperage.

Use this type of connection to jump start the engine.

For a 24 VDC system, two or more 12 VDC batteries are connected in the parallel connection as shown. If jumpering a 24 VDC battery setup, another 24 VDC battery pair is required as the source.

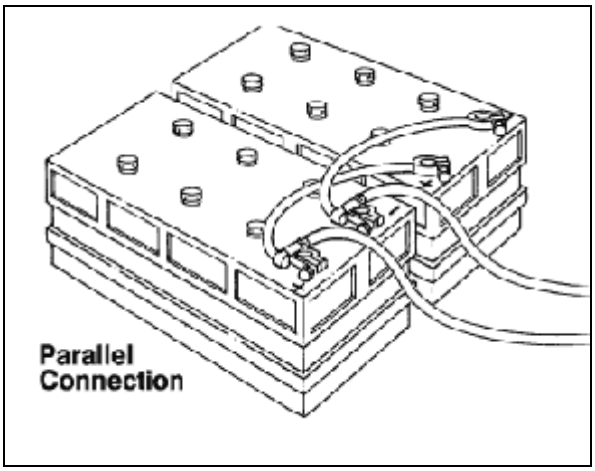

The accompanying illustration shows a typical series battery connection.

This arrangement, positive (+) to negative (-), doubles the voltage.

Do not use this type of connection to jump start the engine using a second 12 VDC battery.

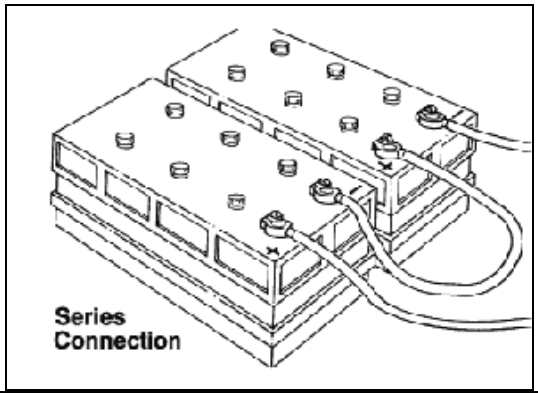

Operating the Engine

Monitor Operating Values Frequently

Monitor the oil pressure and coolant temperature gauges frequently. Refer to Lubricating Oil System Specifications or Cooling System Specifications in Section 10 for recommended operating pressures and temperatures. Shut off the engine if any pressure or temperature does not meet the specifications.

Do not exceed a maximum coolant temperature (93°C [220°F]). The pressure cap (or radiator cap) must meet the minimum pressure of 48 kPa [7 psi].

CAUTION

Continuous operation with low coolant temperature (below 60°C [140°F]) or high coolant temperature (above 100°C [212°F]) can damage the engine.

Verify raw water coolant pressure and flow.

Monitor Engine Condition Periodically

Most engine failures give an early warning. Look and listen for changes in performance, sound, or engine appearance that can indicate service or engine repair is needed. Some changes to look for are as follows:

- Engine misfires
- Vibration
- Unusual engine noises
- Fuel, oil, or coolant leaks
- Sudden changes in engine operating temperature or oil pressure
- Excessive smoke
- Loss of power
- An increase in oil consumption
- An increase in fuel consumption

Emergency Manual Starting Procedures

Overview

The engine starts automatically in the event of a fire emergency. However, if it fails to start automatically, the engine can be started locally by either of two means. The Normal Local Starting Procedure in this section can be used to start the engine if it fails to start because of a failure in the remote fire control system. Operating the engine with this procedure will automatically control raw water flow.

Additionally, manual means are available to start the engine in the event of some local failures. This procedure requires the manual operation of the raw water valves and the use of the manual starting lever on either of the two starting solenoids.

Use the following procedures as specified:

If the red low lube oil pressure light is illuminated, attempt an Emergency Manual Mode Electrical Start.

If the red low lube oil pressure light is not illuminated, attempt an Emergency Manual Mode Non-Electrical Start.

Also, if the fuel shutoff valve is known to be faulted, attempt an Emergency Manual Mode Non-Electrical Start.

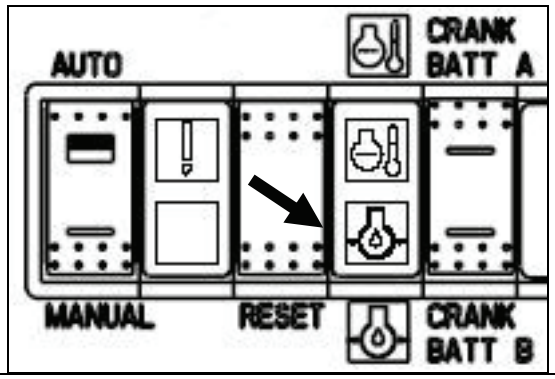

Emergency Manual Mode Electrical Start

Starting the Engine

Open both manual valves in the raw water bypass supply piping.

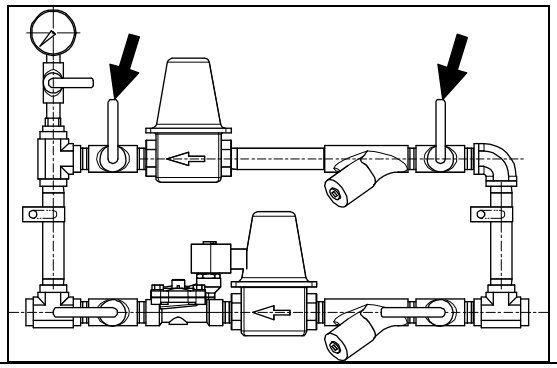

Press the MANUAL position on the AUTO/MANUAL rocker switch.

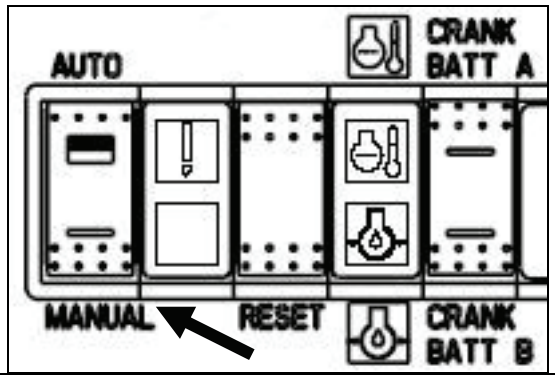

NOTE: Use the lever on either solenoid. If one does not crank the engine, then use the other.

Depress the lever on the selected solenoid to start the engine.

When the engine starts, release the lever.

If the engine cranks but does not start, try the Emergency Manual Mode Non-Electrical Start procedure in this section.

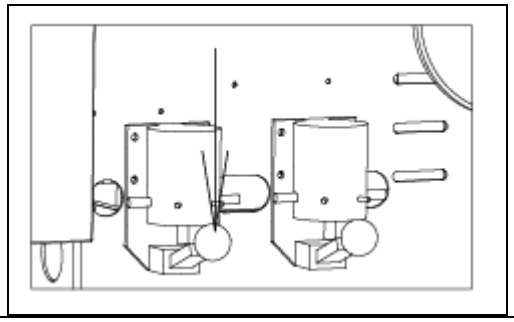

Emergency Manual Mode Electrical Start (Cont)

Stopping the Engine

When emergency operation is done, stop the engine by pressing the AUTO position on the AUTO/MANUAL rocker switch and then press the RESET switch.

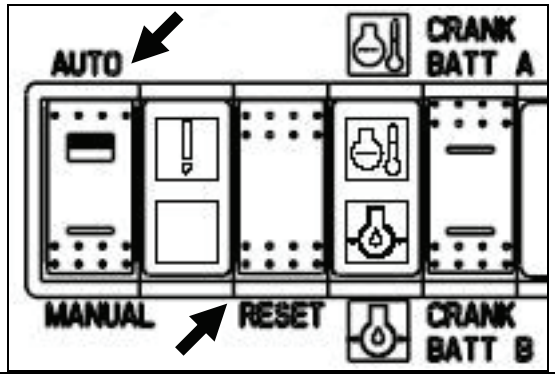

Emergency Manual Mode Non-Electrical Start (CFP59-F10, F20, F40, F50 Only)

Starting the Engine

Open both manual valves in the raw water bypass supply piping.

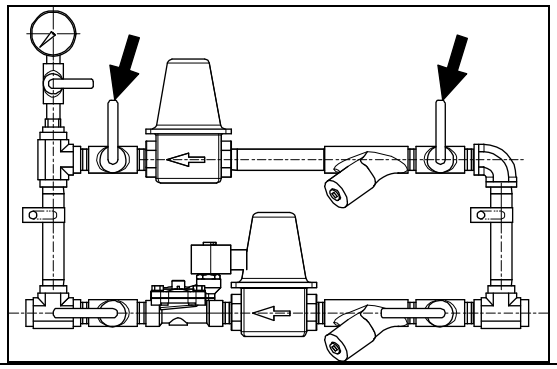

Throttle actuator lever is provided to allow the operator to start the unit in manual mode.

The throttle actuator lever assembly is located on the fuel pump side of the engine and is attached to the fuel pump lever which activates the fuel solenoid shut-off (FSO).

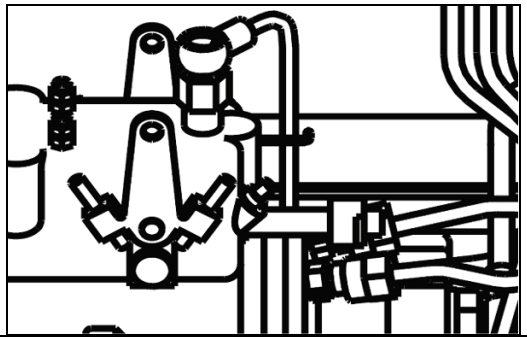

Emergency Manual Mode Non-Electrical Start (CFP-F10, F20, F40, F50 Only) (Cont)

In the event the automatic start is not operational, depress and turn the throttle actuator lever assembly which will move the lever to the run position to start the engine.

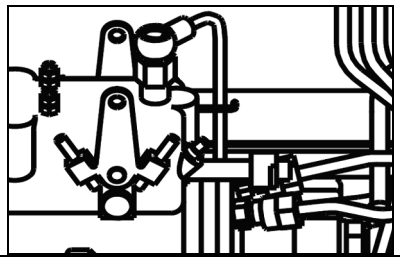

Press down on the crank solenoid lever to engage the starter while in manual mode. Depress until engine starts.

NOTE: If first crank solenoid lever does not engage the starter, repeat on second crank solenoid lever.

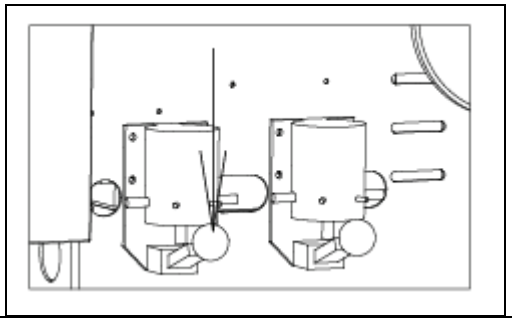

Stopping the Engine

Once engine is operational in automatic mode, be sure to retract the throttle actuator to the closed or automatic position to allow the engine to start in automatic mode.

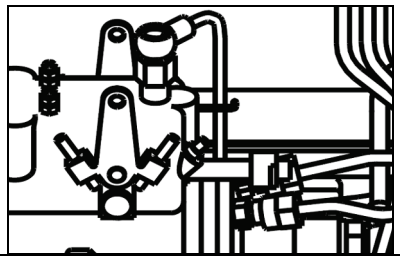

Emergency Manual Mode Non-Electrical Start (CFP59-F15, F25, F45 only)

Starting the Engine

Open both manual valves in the raw water bypass supply piping.

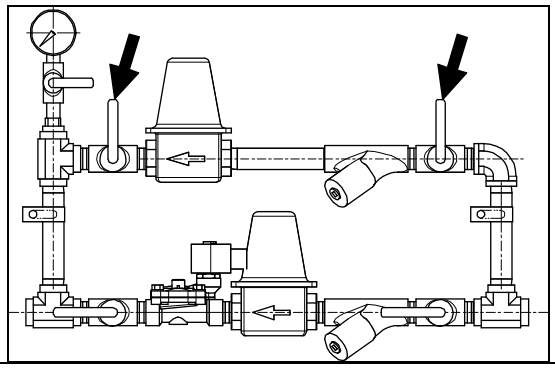

Throttle cable assembly is provided to allow the operator to start the unit in manual mode.

The Throttle cable assembly is located on the fuel pump side of the engine and has a pull handle that is attached to the fuel pump lever which activates the fuel solenoid shut-off (FSO).

The throttle cable assembly is factory installed and is securely fastened to the fuel pump lever in position shown to allow engine to run in closed/automatic mode.

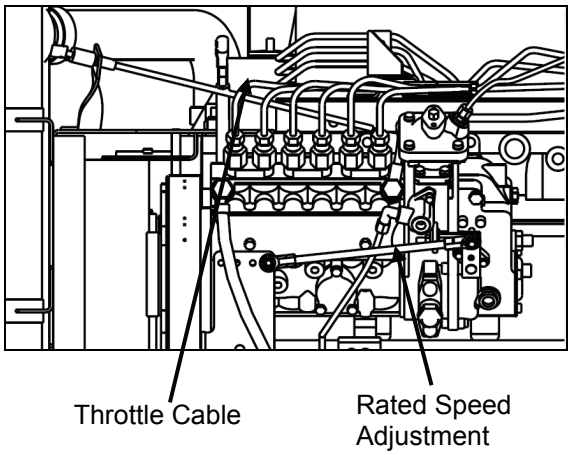

In the event the automatic start is not operational, pull on the throttle handle assembly which will move the lever to the run position to start the engine.

Turn handle assembly to lock throttle cable assembly in position to allow the engine to run in manual mode.

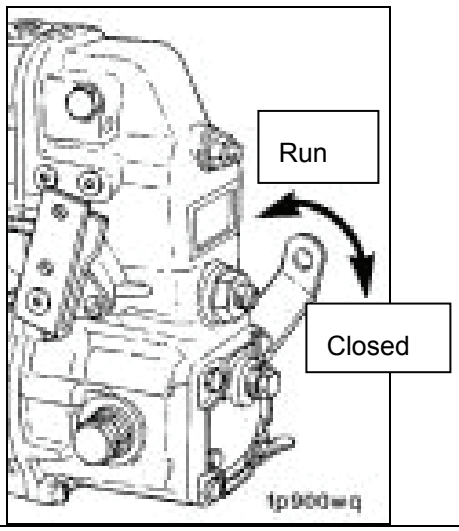

Emergency Manual Mode Non-Electrical Start (CFP59-F15, F25, F45 only) (Cont)

Press down on the crank solenoid lever to engage the starter while in manual mode. Depress until engine starts.

NOTE: If first crank solenoid lever does not engage the starter, repeat on second crank solenoid lever.

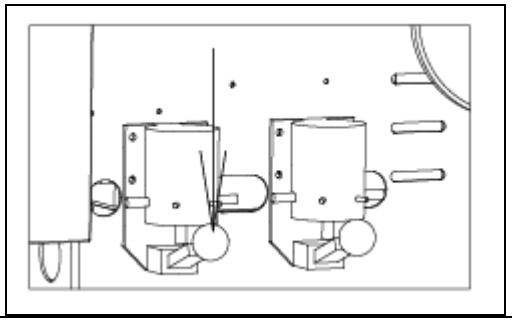

Stopping the Engine

Once engine is operational in automatic mode, be sure to retract the throttle cable to the closed or automatic position to allow the engine to start in automatic mode.

NOTE: If throttle cable assembly does not retract to correct closed position, manually push the lever to the closed or automatic position and adjust the throttle cable assembly so that when activated, it opens and closes the FSO lever accordingly.

Periodic inspection of the throttle cable assembly is recommended.

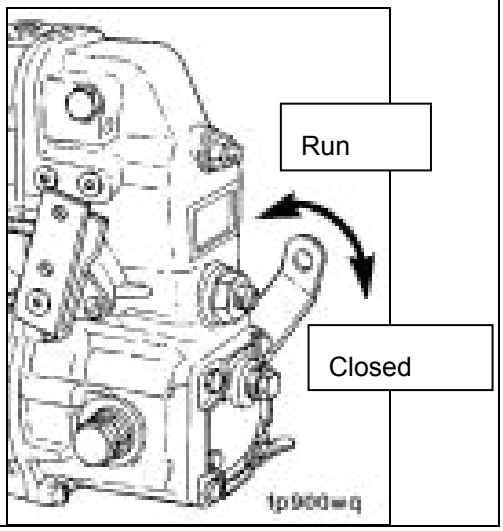

Starting Procedure - After Extended Shutdown or Oil Change

Complete the following steps after each oil change, or after the engine has been shut off for more than 30 days to make sure the engine receives the correct oil flow through the lubricating oil system:

- Disconnect the electrical wire from the fuel pump solenoid valve.
- Rotate the crankshaft, using the starting motor, until oil pressure appears on the gauge, or the warning light goes out.
- Connect the electrical wire to the fuel pump solenoid valve.
- Start the engine; refer to Normal Local Starting Procedure in this section.
- Refer to Air in Fuel in Section 7 for instructions on how to vent the fuel system.

Emergency Manual Stopping Procedure

Disconnect the connector at the electric fuel solenoid (Fuel Shutoff Valve).

Reconnect the connector after the engine as stopped.

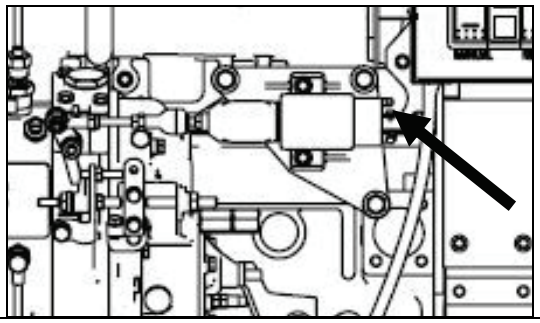

Section 4 - Maintenance Guidelines

Section Contents

Page

Overview 4-3

Tool Requirements 4-4

Maintenance Schedule 4-5

Maintenance Record Form 4-6

THIS PAGE INTENTIONALLY LEFT BLANK

Overview

Cummins Inc. recommends that the engine must be maintained according to the Maintenance Schedule in this section.

If the engine is operating in ambient temperatures below -18°C [0°F] or above 38°C [100°F], perform maintenance at shorter intervals. Shorter maintenance intervals are also required if the engine is operated in a dusty environment or if frequent stops are made. Contact your local Cummins Authorized Repair Location for recommended maintenance intervals.

Some of these maintenance procedures require special tools or must be completed by qualified personnel. Contact your local Cummins Authorized Repair Location for detailed information.

If your engine is equipped with a component or accessory not manufactured by Cummins Inc., refer to the component manufacturer's maintenance recommendations.

Use the form provided in this section as a convenient way to record maintenance performed.

NOTE: If the engine is equipped with a component or an accessory not manufactured by Cummins, refer to the component manufacturer's maintenance recommendations.

Tool Requirements

Most of the maintenance operations described in this manual can be performed with common hand tools (metric and S.A.E. wrenches, sockets, and screwdrivers).

The following is a list of special service tools required for some maintenance operations:

Tool Part Number	Description
CC-2802	Coolant test kit
CC-2800	Refractometer
ST-1273	Pressure gauge
3375045	Torque wrench (0 to 175 ft-lb)
3375049	Oil filter wrench
3376807	Engine coolant and fuel filter wrench
3377161	Digital multimeter
3822524	Belt tension gauge, click type (v-belts and ribbed with 4 or 5 ribs)
3822525	Belt Tension Gauge, Click-type (for V-ribbed with 6 to 12 ribs)
3824556	Charge air cooler (CAC) pressure kit
3824591	Engine barring gear
3824783	Torque wrench (0 to 300 in-lb)
3824842	M10 Compuchek® fitting
3825157	Fuel Injector Connector Puller
3825156	Fuel Injector Puller

Contact your nearest Cummins Authorized Repair Location for the required service tools.

Sockets	Wrenches	Other
10 mm	8 mm	Engine Barring Gear, Part No. 3377371
12 mm	13 mm	Allen Wrench (8 mm)
13 mm	15 mm	Breaker Bar (3/8-in drive)
15 mm	19 mm	Flat Screwdriver
17 mm	22 mm	Ratchet (3/8-in drive)
18 mm	24 mm	Ratchet (1/2-in drive)
19 mm	17 mm (open end)	Filter Wrenches (75 to 80 mm, 90 to 95 mm, and 118 to 131 mm)
22 mm		Pliers
27 mm		Torque Wrench
		T-Bar Puller (75 mm)

Maintenance Schedule

Activity (as per engine specifications)			Trimonthly													
	Daily	Weekly	1	2	3	4	5	6	7	8	9	10	11	12	Procedure #	Page #
Check Air Intake Filter and Piping	x	x	x	x	x	x	x	x	x	x	x	x	x	x	1	5-4
Check Coolant Level	x	x	x	x	x	x	x	x	x	x	x	x	x	x	2	5-4
Check Crankcase Breather Tube	x	x	x	x	x	x	x	x	x	x	x	x	x	x	3	5-5
Check Lubricating Oil Level	x	x	x	x	x	x	x	x	x	x	x	x	x	x	4	5-5
Drain Fuel-Water Separator	x	x	x	x	x	x	x	x	x	x	x	x	x	x	5	5-6
Inspect Aftercooler (CFP59-F10, F20, F40, F50) Inspect Aftercooler Piping (CFP59-F45) Inspect Charge Air Cooler Piping (CFP59-F55)	x	x	x	x	x	x	x	x	x	x	x	x	x	x	6	5-7 5-8 5-9
Check Coolant Heat Exchanger Piping	x	x	x	x	x	x	x	x	x	x	x	x	x	x	7	5-10
Check Coolant Heater Piping	x	x	x	x	x	x	x	x	x	x	x	x	x	x	8	5-10
Bleed Fuel Tanks		x	x	x	x	x	x	x	x	x	x	x	x	x	9	5-11
Clean Raw Water Strainers		x	x	x	x	x	x	x	x	x	x	x	x	x	10	5-11
Check Battery Condition		x	x	x	x	x	x	x	x	x	x	x	x	x	11	5-11
Test Run Engine		x	x	x	x	x	x	x	x	x	x	x	x	x	12	5-12
Check Hose Condition			x	x	x	x	x	x	x	x	x	x	x	x	13	5-14
Check Engine Coolant Heater			x	x	x	x	x	x	x	x	x	x	x	x	14	5-14
Inspect Heat Exchanger Zinc Plug			x	x	x	x	x	x	x	x	x	x	x	x	15	5-14
Inspect Electrical Components			x	x	x	x	x	x	x	x	x	x	x	x	16	5-15
Check Turbocharger Mounting Nuts			x	x	x	x	x	x	x	x	x	x	x	x	17	5-15
Check Engine Mounting Bolts			x	x	x	x	x	x	x	x	x	x	x	x	18	5-15
Check Cooling System Condition			x	x	x	x	x	x	x	x	x	x	x	x	19	5-16
Check Air Cleaner Service Indicator			x	x	x	x	x	x	x	x	x	x	x	x	20	5-17
Inspect Air Intake System Piping			x	x	x	x	x	x	x	x	x	x	x	x	21	5-17
Check Fuel Pump															22	5-18
Change Lubricating Oil and Filters			x	x	x	x	x	x	x	x	x	x	x	x	23	5-18
Change Fuel Filter (Spin-on Type)			x	x	x	x	x	x	x	x	x	x	x	x	24	5-23
Clean Charge Air Cooler			x	x	x	x	x	x	x	x	x	x	x	x	25	5-25
Lubrication of Output Shafts															26	5-26
Drain and Flush Cooling System				x		x		x		x		x		x	27	5-27
Change Coolant Filter				x		x		x		x		x		x	28	5-31
Vent Fuel Supply Lines				x		x		x		x		x		x	29	5-33
Vent Injection Pump				x		x		x		x		x		x	30	5-34
Check Overspeed Switch Operation						x				x				x	31	5-35
Check Drive Belt, Tensioner Bearing and Belt Tension						x				x				x	32	5-35
Adjust Valve Lash Clearance						x				x				x	33	5-41
Inspect Turbocharger										x					34	5-46
Inspect Vibration Damper										x					35	5-47
Inspect Water Pump										x					36	5-47
Engine Steam Cleaning										x					37	5-47
Inspect Overhead Set															38	5-48

Refer to Maintenance Procedures in Section 5 for instructions.

Maintenance Record Form

Engine Serial No.			Engine Model		
Owner's Name			Equipment Name/Number		
Date	**Hours or Time Interval**	**Actual Hours**	**Check Performed**	**Performed By**	**Comments**

Section 5 - Maintenance Procedures

Section Contents

Page

Daily 5-3
Weekly 5-11
Every Three Months or 250 Hours 5-14
Every Six Months or 500 Hours 5-27
Every Year or 1000 Hours 5-35
Every Two Years or 2000 Hours 5-47
Every Four Years or 5000 Hours 5-48

THIS PAGE INTENTIONALLY LEFT BLANK

DAILY

General Information

Preventative maintenance begins with day-to-day awareness of the engine and its system.

On a daily basis, inspect the engine for the following issues:

- Leaks
- Loose or damaged parts
- Worn or damaged belts
- Any change in engine appearance
- Odor of fuel
- Correct any problems as per the instructions in this manual.
- Perform the specific checks in this section only after the engine has been stopped. Do not perform this section if the fire pump is in operation.

Engine Operation Report

The engine must be maintained in top mechanical condition if the operator is to get optimum satisfaction from its use. The maintenance department needs daily running reports from the operator to make necessary adjustments in the time allocated. The daily running report also helps to make provisions for more extensive maintenance work as the reports indicate the necessity.

Comparison and intelligent interpretation of the daily report, along with a practical follow-up action, will eliminate most failures and emergency repairs.

Report to the maintenance department any of the following conditions:

- Low lubricating oil pressure
- Low power
- Power increases or engine surge
- Erratic or no accelerator control or response
- Any warning lights flashing or staying on
- Abnormal water or oil temperature
- Unusual engine noise
- Excessive smoke
- Excessive use of coolant, fuel, or lubricating oil
- Any fuel, coolant, or lubricating oil leaks
- Loose or damaged parts
- Worn or damaged belts

Unusual Engine Noise

During daily maintenance checks, listen for any unusual engine noise that can indicate that service is required.



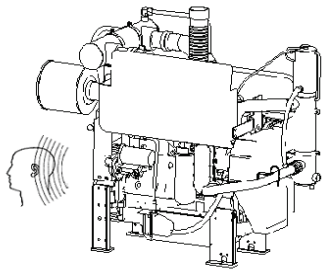

Procedure 1 **Check Air Intake Filter and Piping**

Visually inspect the air intake filter and piping daily for wear points and damage to piping, loose clamps, or punctures.

Replace damaged air filter or pipes, and tighten loose clamps, as necessary, to prevent the air system from leaking. Refer to Adjustment, Repair and Replacement in Section 7 for replacement procedures.

Check for corrosion under the clamps and hoses of the intake system piping. Corrosion can allow corrosive products and dirt to enter the intake system.

Disassemble and clean, as required. Refer to Adjustment, Repair and Replacement in Section 7 for replacement procedures.

Torque loosened clamps.

Torque Value: 8 N•m [72 in-lb]

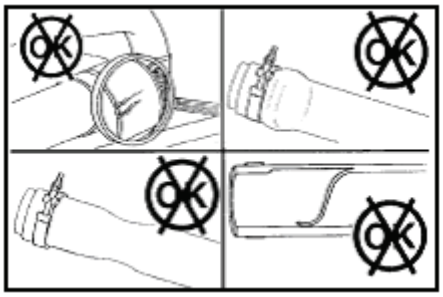

Procedure 2 **Check Coolant Level**

WARNING

Do not remove a pressure cap from a hot engine. Wait until the coolant temperature is below 50°C [120°F] before removing the pressure cap (Cummins Fire Power Part No. 11407). Heated coolant spray or steam can cause personal injury.

CAUTION

Never use a sealing additive to stop leaks in the cooling system. This can result in cooling system plugging and inadequate coolant flow, causing the engine to overheat.

CAUTION

Do not add cold coolant to a hot engine. Engine castings can be damaged. Allow the engine to cool to below 50°C [120°F] before adding coolant.

Press down, unscrew and remove the pressure cap (Cummins Fire Power Part No. 11407).

NOTE: Coolant level should be at the bottom of the fill neck. It must be above the raw water tubes.

Check coolant level.

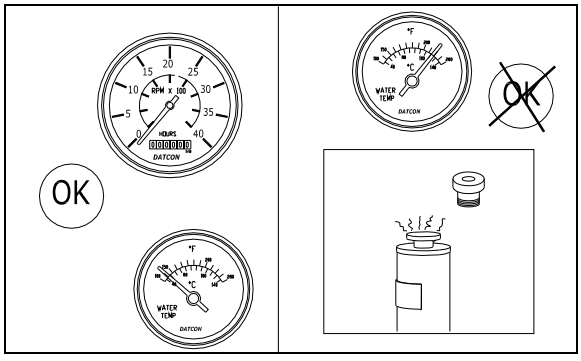

NOTE: Make up coolant added to the engine must be mixed with the correct proportions of antifreeze, supplemental coolant additive and water to avoid engine damage.

Coolant specifications can be found in Coolant Recommendations and Specifications in Section 7.

If required, prepare a coolant solution.

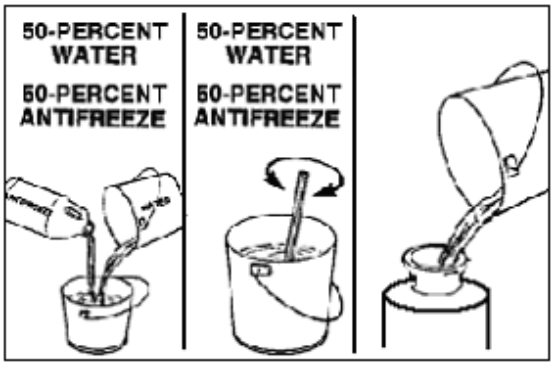

Fill the cooling system with coolant to the bottom of the fill neck in the coolant heat exchanger.

When done, press down and screw in the pressure cap (Cummins Fire Power Part No. 11407).

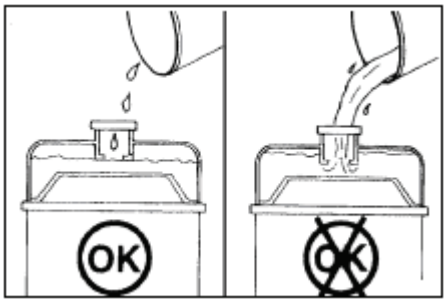

Procedure 3 **Check Crankcase Breather Tube**

Inspect the breather tube for sludge, debris, or ice in the tube.

If the breather tube is obstructed or blocked, clean it.

Inspect the tube more frequently in icy conditions.

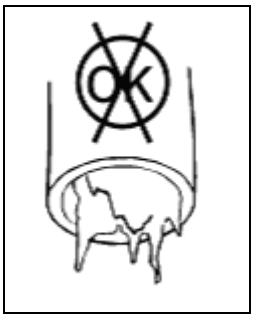

Procedure 4 **Check Lubricating Oil Level**

CAUTION

Never operate the engine with oil level below the L (low) mark or above the H (high) mark. Poor engine performance or engine damage can occur.

NOTE: Wait at least 15 minutes after shutting off the engine to check the oil level. This allows time for the oil to drain into the oil pan.

The engine must be level when checking the oil level to make sure the measurement is correct.

Check the oil level on the dipstick.

NOTE: If the lube oil is excessively high, troubleshoot as per Oil Level Rises in Section 7.

If the lube oil level is greater than the high mark, drain the excessive oil. Refer to Drain Oil in Change Lubricating Oil and Filters in Section 7.

If the lube oil level is below the low mark, add oil. Refer to Fill Oil in Change Lubricating Oil and Filters later in this Section.

NOTE: If the lube oil is excessively low, troubleshoot as per Lubricating Oil Consumption Excessive in Section 12.

Oil Capacity (Low to High Mark Oil): 3.8 liters [4 U.S. qt]

For additional lubricating oil recommendations and oil pan capacity information, refer to Lubricating Oil Recommendations and Specifications and Lubricating Oil System Specifications in Section 7.

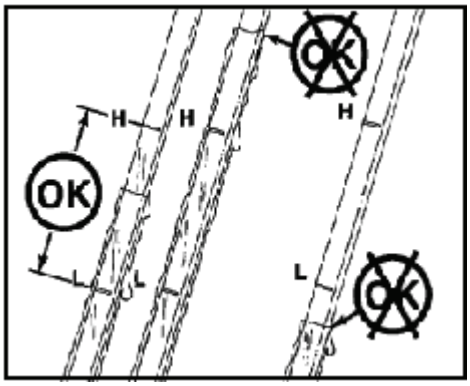

Procedure 5 Drain Fuel-Water Separator

Cummins Inc. requires a fuel-water separator or fuel filter be installed in the fuel supply system. Drain the water and sediment from the separator daily.

WARNING

Drain the water-fuel separator into a container and dispose of in accordance with local environmental regulations.

Spin-on Type

NOTE: If more than 59 ml (2 oz) is drained, refilling of the filter is required to prevent hard starting.

Use your hand to open the drain valve. Turn the valve counterclockwise approximately 3½ turns until the valve drops down 25.4 mm [1 in] and draining occurs.

Drain the filter sump until clear fuel is visible.

CAUTION

When closing the drain valve, do not over-tighten the valve. Over-tightening can damage the threads.

Close the valve by lifting the valve and turning it clockwise until it is hand-tight.

If required, refill the filter. Refer to Change Fuel Filter later in this section for removal and installation instructions.

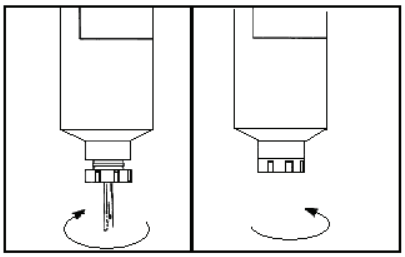

Procedure 6a **Inspect Aftercooler Piping (CFP59-F10. F20, F40, F50)**

Inspect the charge air piping and hoses daily for holes, cracks, or loose connections.

Tighten the hose clamps, if necessary.

Refer to the manufacturer's specifications for the correct torque value.

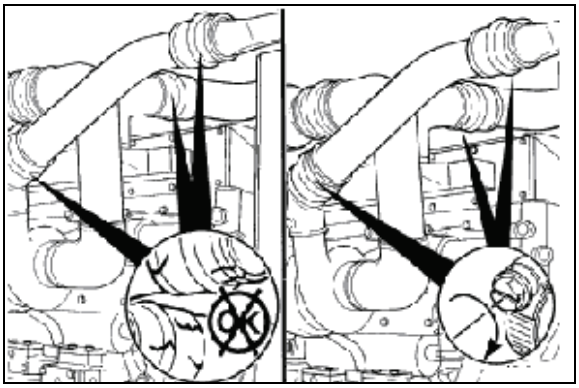

Inspect the charge air cooler for dirt and debris blocking the fins.

Check for cracks, holes, or other damage.

If damage is found, refer to Section 7 of this manual.

Inspect the intake piping daily for wear points and damage to piping, loose clamps, or punctures that can damage the engine.

Replace damaged pipes and tighten loose clamps as necessary to prevent the air system from leaking.

Torque Value: 8 N•m [72 in-lb]

Check for corrosion under the clamps and hoses of the intake system piping. Corrosion can allow corrosive products and dirt to enter the intake system. Disassemble and clean as required.

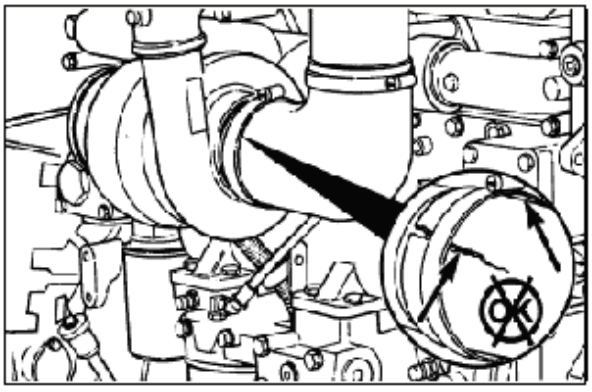

Procedure 6b **Inspect Aftercooler Piping (CFP59-F45)**

Inspect the charge air piping and hoses daily for holes, cracks, or loose connections.

Tighten the hose clamps, if necessary.

Refer to the manufacturer's specifications for the correct torque value.

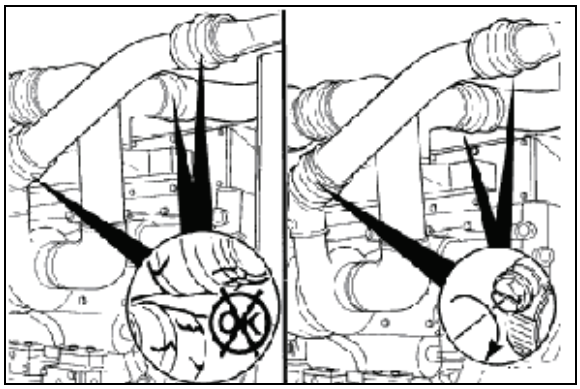

Inspect the charge air cooler for dirt and debris blocking the fins.

Check for cracks, holes, or other damage.

If damage is found, refer to Section 7 of this manual.

Inspect the intake piping daily for wear points and damage to piping, loose clamps, or punctures that can damage the engine.

Replace damaged pipes and tighten loose clamps as necessary to prevent the air system from leaking.

Torque Value: 8 N•m [72 in-lb]

Check for corrosion under the clamps and hoses of the intake system piping. Corrosion can allow corrosive products and dirt to enter the intake system. Disassemble and clean as required.

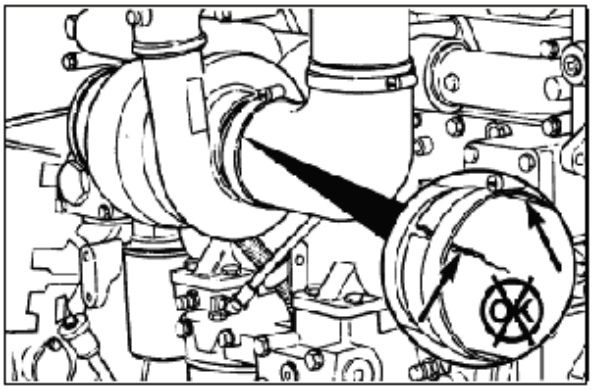

Procedure 6c **Inspect Charge Air Cooler Piping (CFP59-F55)**

Inspect the charge air piping and hoses daily for holes, cracks, or loose connections.

Tighten the hose clamps, if necessary.

Refer to the manufacturer's specifications for the correct torque value.

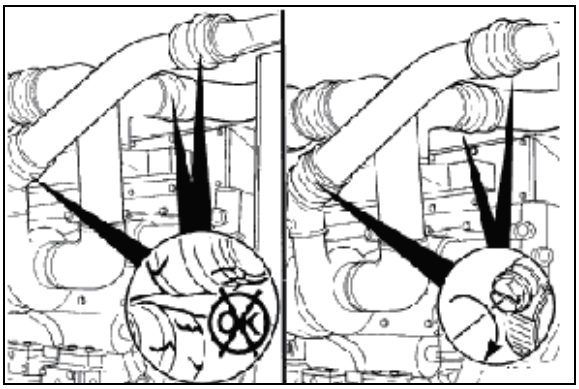

Inspect the charge air cooler for dirt and debris blocking the fins.

Check for cracks, holes, or other damage.

If damage is found, refer to Section 7 of this manual.

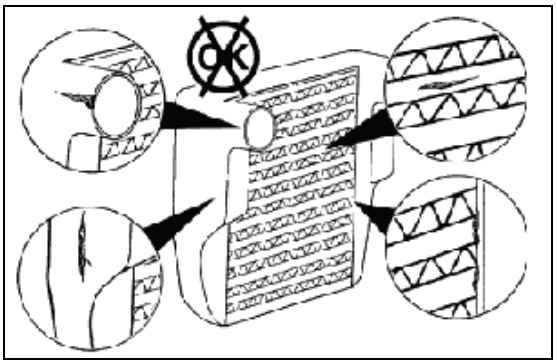

Inspect the intake piping daily for wear points and damage to piping, loose clamps, or punctures that can damage the engine.

Replace damaged pipes and tighten loose clamps as necessary to prevent the air system from leaking.

Torque Value: 8 N•m [72 in-lb]

Check for corrosion under the clamps and hoses of the intake system piping. Corrosion can allow corrosive products and dirt to enter the intake system. Disassemble and clean as required.

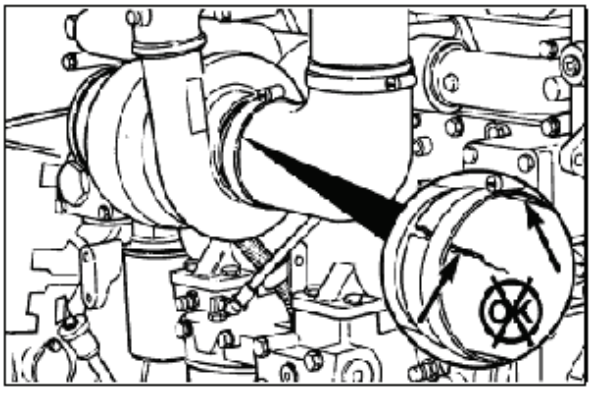

Procedure 7 **Check Coolant Heat Exchanger Piping**

Visually inspect the coolant heat exchanger and piping daily for wear points and damage to piping, loose clamps, or punctures.

Replace damaged tubes, clamps, or pipes, and tighten loose clamps, as necessary, to prevent the coolant system from leaking. Refer to Adjustment, Repair and Replacement in Section 7 for replacement procedures.

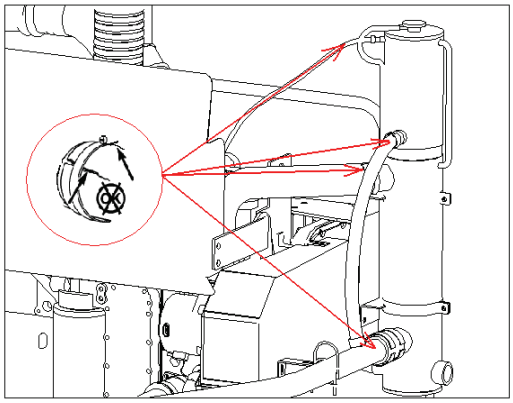

Procedure 8 **Check Coolant Heater Piping**

Visually inspect the engine coolant heater hoses and piping daily for wear points and damage to piping, loose clamps, or punctures.

Replace damaged tubes, clamps, or pipes, and tighten loose clamps, as necessary, to prevent the coolant system from leaking. Refer to Adjustment, Repair and Replacement in Section 7 for replacement procedures.

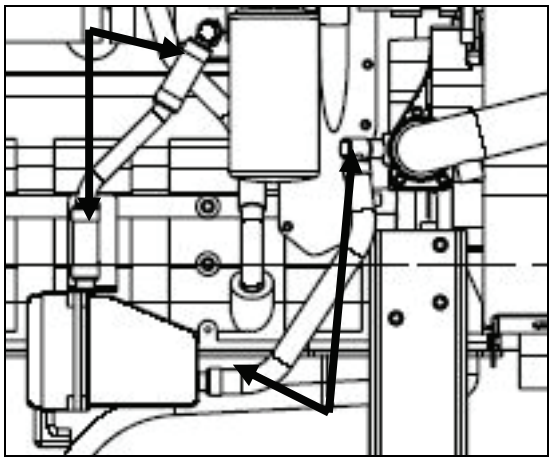

WEEKLY

General Information

With the engine not running, perform the daily maintenance checks plus the following:

Procedure 9 Bleed Fuel Tanks

Loosen the fuel tank drain plug or open the drain valve.

Drain approximately 1 cup of fuel to remove water and sediment.

Close the drain valve or tighten the drain plug.

Dispose of the waste fuel in accordance with applicable requirements.



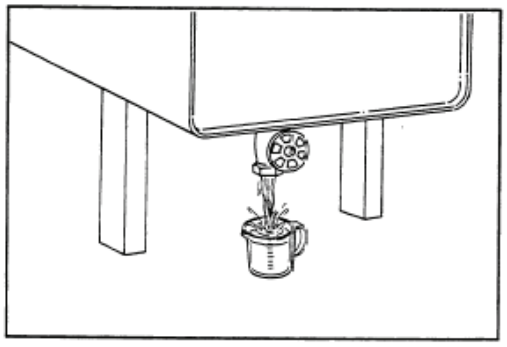

Procedure 10 Clean Raw Water Strainers

For each raw water strainer, remove the plug.

Inspect and remove any debris.

Install the strainer plugs.

Unless otherwise directed, ensure that the bypass line valves are closed and the normal line valves are open.





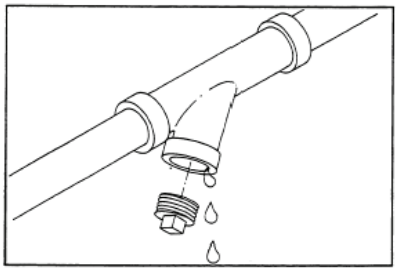

Procedure 11 Check Battery Condition

Inspect the condition of the batteries.

Refer to Section 7 for inspection and maintenance procedures.





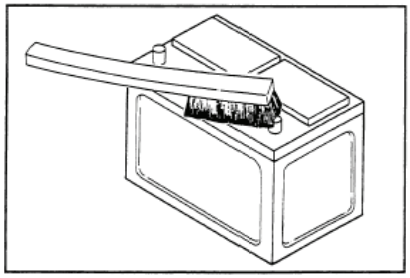

Procedure 12 **Test Run Engine**

Start Test Run

Select the **MANUAL** position on the AUTO/MANUAL Switch.

Press the **CRANK A** or **CRANK B** switch.

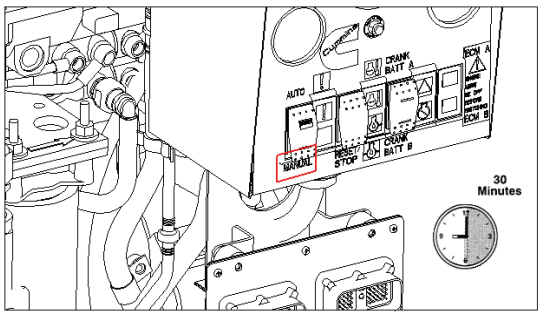

Check Unusual Engine Noise

Run the engine no less than 30 minutes to attain normal running temperature.

During the weekly maintenance check, listen for any unusual engine noise which can indicate that service is required.

Check running indications.

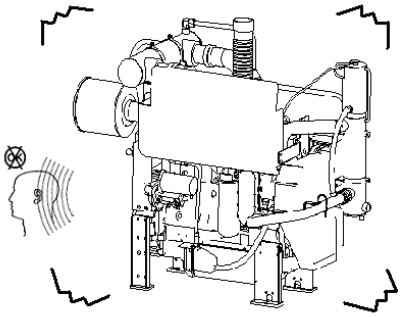

Observe that the engine is operating at test speed as follows:

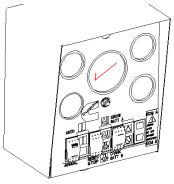

Check oil pressure is greater than 10 PSI.

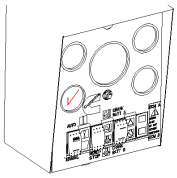

Check coolant temperature is between 140°F and 212°F.

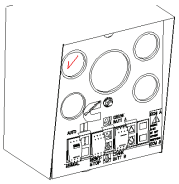

Check that both battery voltmeters indicate 12 VDC standard (24 VDC optional) depending upon the application.

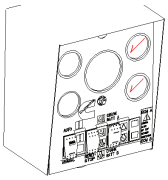

Check that the inlet air restriction indicator has not popped-up. Red plunger would be popped as shown.

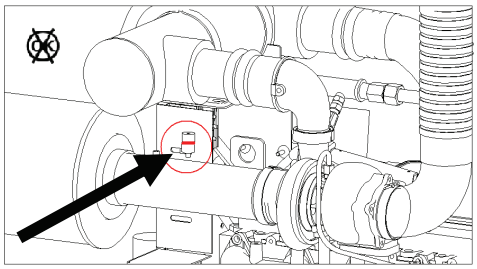

Check that the Fuel Injection Failure (F.I.F.) light is not turned on.

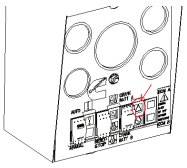

End Test Run

Select the **AUTO** position on the AUTO/MANUAL Switch.

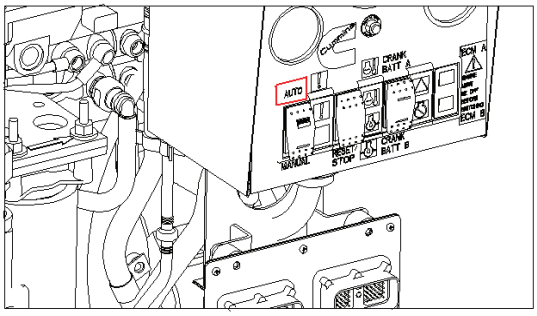

Every Three Months or 250 Hours

General Information

All checks or inspections listed under daily or previous maintenance intervals must also be performed at this time, in addition to those listed under this maintenance interval.

Procedure 13 Check Hose Condition

Inspect the lubricating, fuel, and cooling system hoses and hose connection for leaks or deterioration. Particles of deteriorated hose can be carried through the cooling system and slow or partially stop circulation.

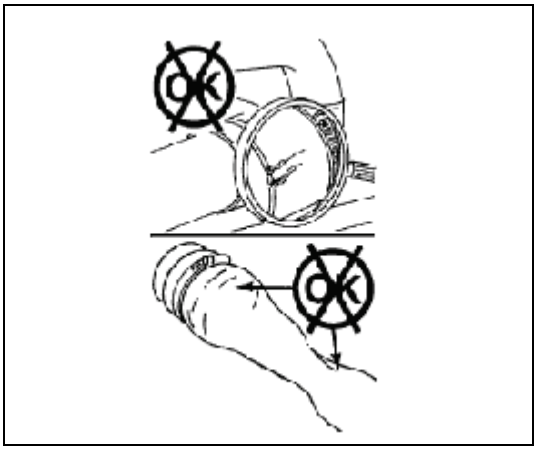

Procedure 14 Check Engine Coolant Heater

NOTE: Do not perform this inspection procedure until 24 hours after shutting off the engine.

The engine coolant heater must maintain an engine coolant temperature of 49 °C (120 °F) or above. The engine block must be warm to the touch in the water jacket areas.

If the heater does not appear to be working correctly, contact a Cummins Authorized Repair Location.

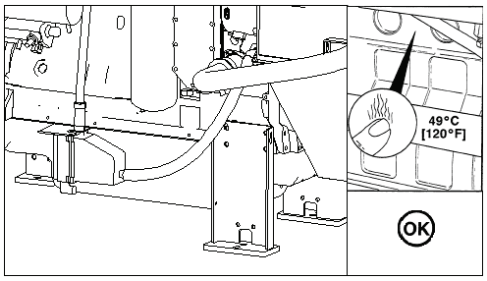

Procedure 15 Inspect Heat Exchanger Zinc Plug

Remove the zinc plug.

Inspect the plug. If it has eroded over 50 percent, replace the plug (Cummins Fire Power Part No. 9750) and brass fitting (Cummins Fire Power Part No. 9751).

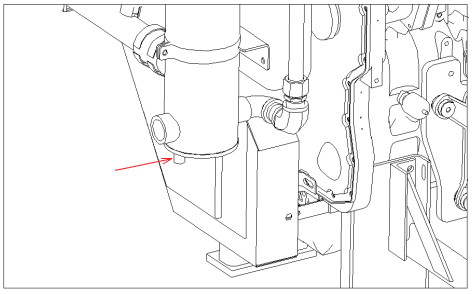

Procedure 16 Inspect Electrical Components

Clean and tighten any loose electrical connections.

Follow the manufacturer's recommended procedures for servicing the electrical components and batteries.



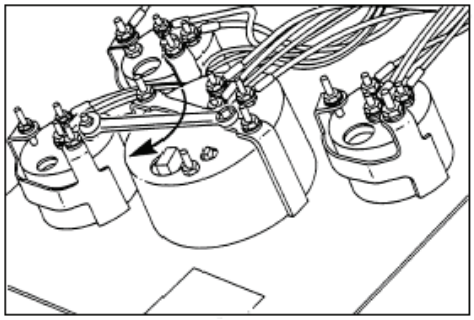

Procedure 17 Check Turbocharger Mounting Nuts

Check the turbocharger mounting nuts. Tighten the mounting nuts.

Torque Value: 65 N•m (50 ft-lb)



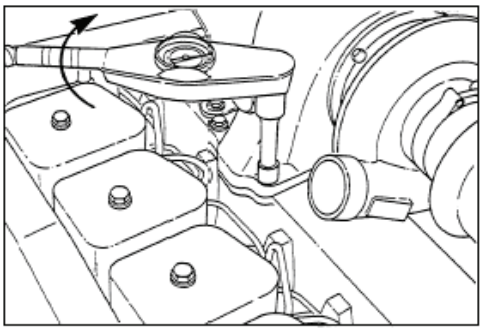

Procedure 18 Check Engine Mounting Bolts

CAUTION

Damaged engine mounts and brackets can cause engine misalignment. Driveline component damage can result in vibration complaints.

Inspect all rubber-cushioned mounts for cracks or damage.

Inspect all mounting brackets for cracks or damaged bolt holes.

Check the torque on the engine mounting nuts and bolts. Tighten any that are loose.



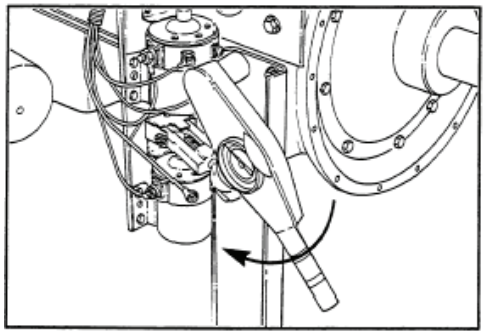

Procedure 19 **Check Cooling System Condition**

WARNING

Check the coolant level only when the engine is stopped. Wait until the coolant temperature is below 50 °C (120 °F) before removing the pressure cap (Cummins Fire Power Part No. 11407). Failure to do so can cause personal injury from heated coolant spray.

Supplemental Coolant Additive(SCA)

Check the SCA concentration level:

~At least twice a year

~At every subsequent oil drain interval if the concentration is above 3 units

~Whenever coolant is added to the cooling system between filter changes.

Use Fleetguard® coolant test kit, Part No. CC2602, to check the SCA concentration level. Instructions are included with the test kit. Refer to Coolant Recommendations and Specifications in Maintenance Specifications (Section V) for the correct SCA and antifreeze level.

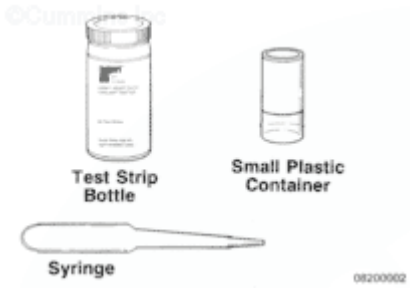

Antifreeze

CAUTION

Over concentration of antifreeze or use of high-silicate antifreeze can damage the engine.

Check the antifreeze concentration.

Use a mixture of 50-percent water and 50-percent ethylene glycol-base antifreeze to protect the engine to -37°C [-34°F] year-around.

Antifreeze is essential in any climate. It broadens the operating temperature range by lowering the coolant freezing point and raising its boiling point.

The corrosion inhibitors also protect the cooling system components from corrosion and provide longer component life.

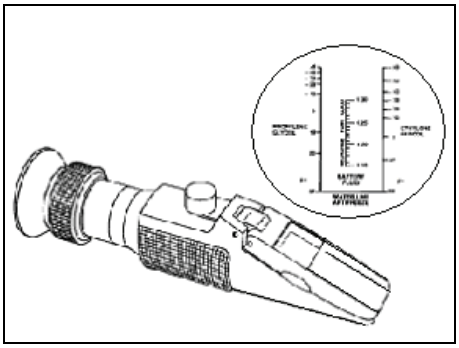

Procedure 20 Check Air Cleaner Service Indicator

CAUTION

Never operate the engine without an air cleaner. Unfiltered foreign objects could cause engine damage.

Maximum intake air restriction is 762 mm H2O [30.0 in H2O] for turbocharged engines.

Turbocharged engines must be operated at rated RPM and full load to check maximum intake air restriction. Replace the air cleaner element when the restriction reaches the maximum allowable limit, or clean according to the manufacturer's recommendations.

NOTE: Follow the manufacturer's instructions when cleaning or replacing the air cleaner element.

NOTE: Do not remove the felt washer from the indicator. The felt washer absorbs moisture**.**

Check the air cleaner service indicator, if equipped.

A mechanical restriction indicator is available to indicate excessive air restriction through a dry-type air cleaner. This instrument can be mounted in the air cleaner outlet or on the instrument panel.

Change the filter element when the red indicator flag (2) is at the raised position in the window (1).

After the air cleaner has been serviced, push the button (3) to reset the service indicator.

NOTE: Never operate the engine without an air cleaner. Intake air must be filtered to prevent dirt and debris from entering the engine and causing premature wear.

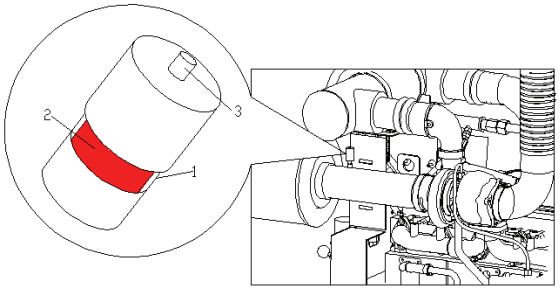

Procedure 21 Inspect Air Intake System Piping

Inspect the intake piping for cracked hoses, loose clamps, or punctures that can allow dirt and debris to enter the engine.

Tighten or replace parts as necessary to make sure the air intake system does not leak.

Check for corrosion of the intake system piping under the clamps and hoses. Corrosion can allow corrosive products and dirt to enter the intake system.

Disassemble and clean as required.

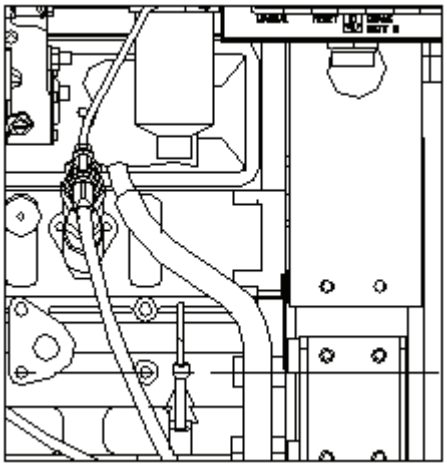

Procedure 22 **Check Fuel Pump**

Inspect the fuel injection pump mounting nuts, including the support bracket, for loose or damaged hardware.

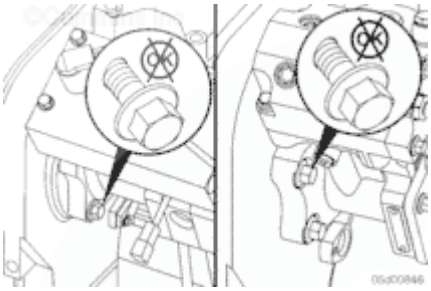

Procedure 23 **Change Lubricating Oil and Filters**

WARNING

To reduce the possibility of personal injury, avoid direct contact of hot oil with your skin.

WARNING

Some state and federal agencies have determined that used engine oil can be carcinogenic and cause reproductive toxicity. Avoid inhalation of vapors, ingestion, and prolonged contact with used engine oil. If not reused, dispose of in accordance with local environmental regulations.

WARNING

If no oil pressure is noted within 15 seconds after the engine is started, shut down the engine to reduce the possibility of internal damage.

CAUTION

For composite oil pans, always use a new sealing washer on the oil drain plug. Hold the external locking nut in place while tightening the oil drain plug.

Lubricating Oil and Filter Change Interval

Engine oil becomes contaminated and essential oil additives are depleted with use. The amount of contamination is related to the total amount of fuel and oil consumed.

The oil change interval for turbocharged engines is every 3 months or 250 hours. Change the oil and the filters to remove the contaminants suspended in the oil.

NOTE: If the lubricating oil is drained from the oil pan to make an engine repair, new oil must be used. Do not use oil after it has been drained from the oil pan.

Laboratory and field tests have determined that, when using the recommended quality oils and filters, a turbocharged engine in good condition and equipped with a by-pass oil filter can consume 255 U.S. gallons of fuel for each U.S. gallon of oil in the oil system before the maximum level of oil contamination is reached.

NOTE: Cummins Engine Co. Inc, does not recommend exceeding 25,000 miles and/or 600 hours on oil change intervals.

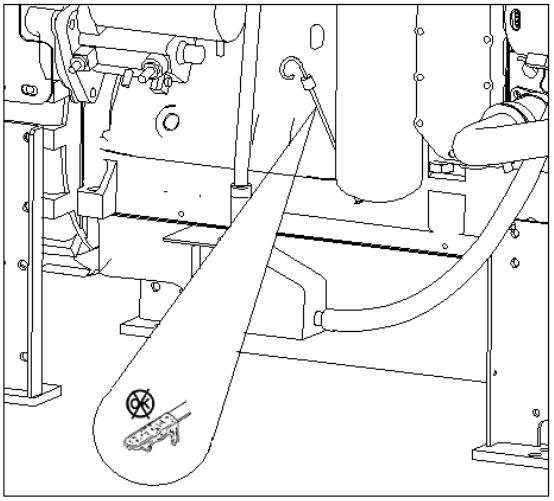

Drain

CAUTION

Avoid prolonged and repeated skin contact with used engine oils. Such prolonged and repeated contact can cause skin disorders or other bodily injury. Wash thoroughly after contact. Keep out of reach of children.

NOTE: If the engine is in service, the oil drain interval of 250 hours or 3 months must be observed.

PROTECT THE ENVIRONMENT: Handling and disposal of used engine oil is subject to federal, state, and local laws and regulations. Use authorized waste disposal facilities, including civic amenity sites and garages providing authorized facilities for receipt of used oil. If in doubt, contact state and local environmental authorities or the Environmental Protection Agency for guidance as to proper handling and disposal of used engine oil.

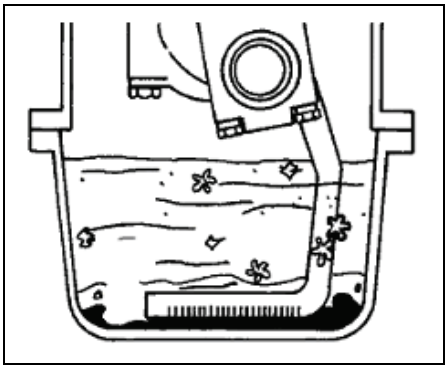

Change the oil and filters to remove the contaminants suspended in the oil.

NOTE: Drain the oil only when it is hot and the contaminants are in suspension.

CAUTION

Hot oil can cause personal injury.

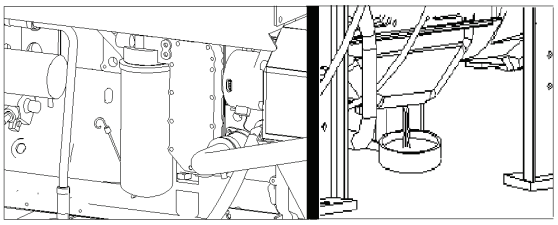

Operate the engine until the water temperature reaches 60°C [140°F].

Shut the engine off.

NOTE: Use a container that can hold at least 20 liters [21.1 qt] of oil.

NOTE: For composite oil pans, hold the external locking nut in position with a separate wrench while removing the drain plug. This will prevent the bulkhead from loosening during drain plug removal.

Remove the oil drain plug.

Drain the oil immediately to make sure all the oil and suspended contaminates are removed from the engine.

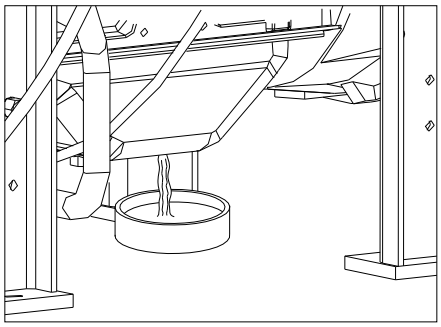

Remove

Clean the area around the lubricating oil filter head. Using an oil filter wrench, remove the filter. Clean the gasket surface of the filter head with a clean lint-free cloth.

NOTE: The o-ring can stick on the filter head. Make sure it is removed before installing the new filter.

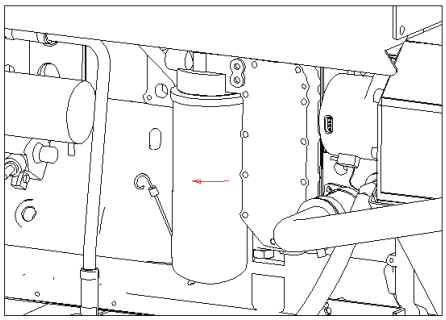

Install

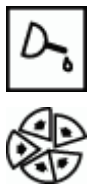

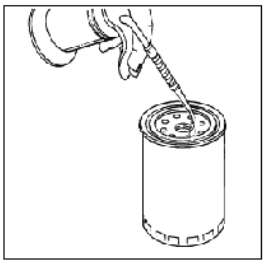

CAUTION

The lubricating oil filter should be full of oil at start-up to prevent engine damage.

Apply a light film of lubricating oil to the gasket sealing surface before installing the filters.

Use clean 15W-40 oil to coat the gasket surface of the filter.

Fill the filter with clean 15W-40 oil.

CAUTION

Mechanical over tightening can distort the threads or damage the filter element seal.

Install the filter on the oil filter head. Tighten the filter until the gasket contacts the filter head surface.

Install the filter as specified by the filter manufacturer.

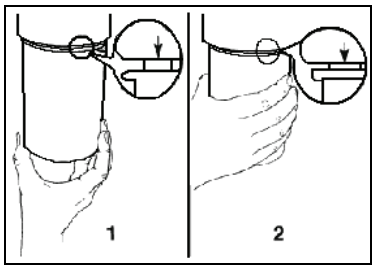

Check and clean the oil drain plug threads and sealing surface.

Install the oil drain plug.

Torque Value: 50 N•m [37 ft-lb]



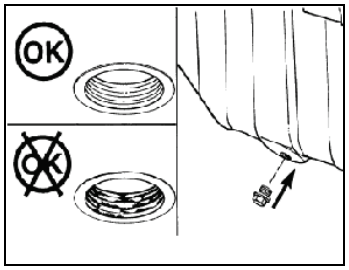

NOTE: Use a high-quality 15W-40 multiviscosity lubricating oil, such as Cummins Premium Blue®, or its equivalent, in Cummins engines. Choose the correct lubricating oil for your operating climate as outlined in Section 5.





Fill the engine with clean oil to the proper level.

NOTE: Capacities assume standard pan. Total system assumes standard pan plus filter.

NOTE: When filling the oil pan, use the fill tube on the side of the engine rather than on top of the rocker lever cover.

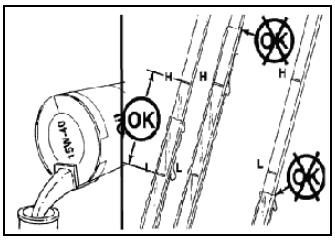

WARNING

If no oil pressure is noted within 15 seconds after the engine is started, shut down the engine to reduce the possibility of internal damage

Operate the engine at idle to inspect for leaks at the filters and the drain plug.

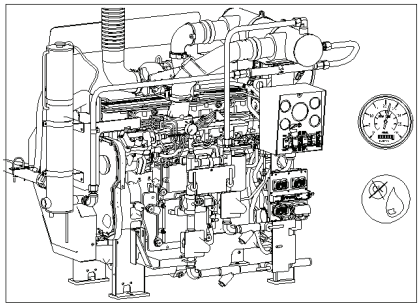

Stop the engine.

Wait approximately 15 minutes to let the oil drain from the upper parts of the engine.

Check the oil level again.

Add oil as necessary to bring the oil level to the H (high) mark on the dipstick.

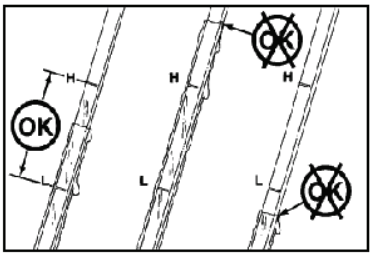

Procedure 24 **Change Fuel Filter (Spin-on Type)**

WARNING

Fuel is flammable. Keep all cigarettes, flames, pilot lights, arcing equipment, and switches out of the work area and areas sharing ventilation to reduce the possibility of severe personal injury or death when working on the fuel system.

CAUTION

Use caution when disconnecting or removing fuel lines, replacing filters and priming the fuel system that fuel is not spilled or drained into the bilge area. Do not drop or throw filter elements into the bilge area. The fuel and fuel filters must be discarded in accordance with local environmental regulations.

CAUTION

Mechanical overtightening can distort the threads as well as damage the filter element seal or filter canister.

Remove

NOTE: Close any OEM fuel valves (if equipped) to prevent fuel from draining or siphoning.

Clean the area around the fuel filter head. Remove the filters. Clean the gasket surface of the filter head.

Replace the o-ring.



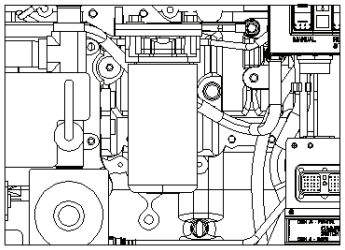

Install

Fill the new filter(s) with clean fuel, and lubricate the o-ring seal with clean lubricating oil.

Fuel-water separator - used in single-filter applications.



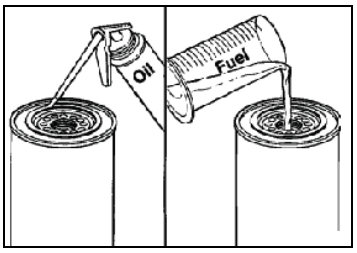

It will be necessary to fill the 10-micron water stripping (suction side) fuel filter with fuel.

Do **not** fill the 10-micron (pressure side) fuel filter with fuel before installation; instead, prime the fuel system using the fuel lift pump.

Be sure the center seal ring is installed onto the filter spud.

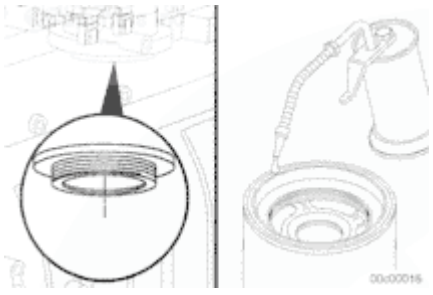

CAUTION

Mechanical over-tightening will distort the threads, filter element seal or filter can.

Install the filter as specified by the filter manufacturer.

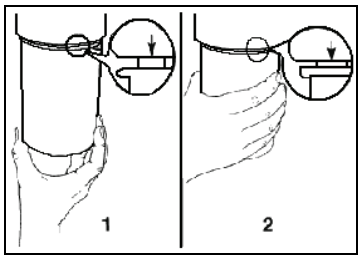

Finishing Steps

Once the engine is started, slowly increase the engine speed while air is purged from the fuel plumbing.

Procedure 25 Clean Charge Air Cooler

If the engine experiences a turbocharger failure or any other occasion where oil or debris is put into the charge air cooler, the charge air cooler must be cleaned.

Remove charge air cooler from the engine. Refer to the manufacturer's instructions.

WARNING

When using solvents, acids, or alkaline materials for cleaning, follow the manufacturer's recommendations for use. Wear goggles and protective clothing to avoid personal injury.

CAUTION

Do not use caustic cleaners to clean the charge air cooler. Damage to the charge air cooler will result.

Flush the charge air cooler internally with solvent in the opposite direction of normal airflow. Shake the charge air cooler and lightly tap on the end tanks with a rubber mallet to dislodge trapped debris. Continue flushing until all debris or oil is removed.

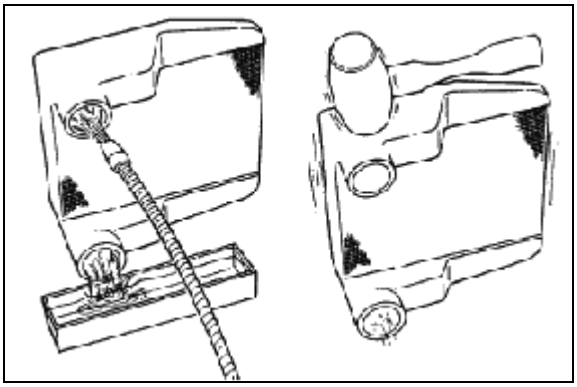

WARNING

Wear appropriate eye and face protection when using compressed air. Flying debris and dirt can cause personal injury.

After the charge air cooler has been thoroughly cleaned of all oil and debris with solvent, wash the charge air cooler internally with hot, soapy water to remove the remaining solvent. Rinse thoroughly with clean water.

Blow compressed air into the charge air cooler in the opposite direction of normal airflow until the charge air cooler is dry internally.

Refer to the manufacturer's instructions for installation procedures.

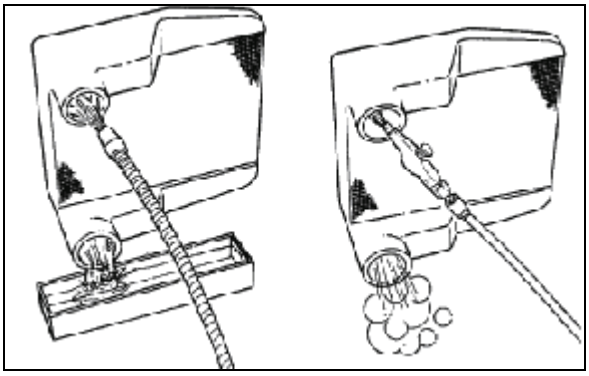

Procedure 26 **Lubrication of Output Shafts**

It is recommended that proper lubrication to drive shafts and output shafts is to be completed on a regular schedule.



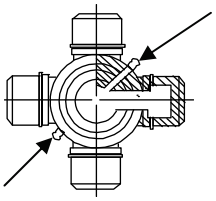

Grease zerk fittings as shown.

See Lubricating Oil Recommendations and Specifications in Section 10 for grease specifications.

Every Six Months or 500 Hours

General Information

All checks or inspections listed under daily or previous maintenance intervals must also be performed at this time, in addition to those listed under this maintenance interval.

Procedure 27 Drain and Flush Cooling System

The cooling system must be clean to work correctly.

Drain the system and flush with clean water.

If the system shows mineral buildup, scale, rust or oil, clean with a heavy duty engine coolant cleaner and follow the manufacturer's directions.

Drain

CAUTION

Avoid prolonged and repeated skin contact with used antifreeze. Such prolonged, repeated contact can cause skin disorders or other bodily injury.

CAUTION

Wait until the temperature is below 50°C [120°F] before removing the coolant system pressure cap, (Cummins Fire Power Part No. 11407). Failure to do so can cause personal injury from heated coolant spray.

Avoid excessive contact - wash thoroughly after contact.

Keep out of reach of children.

Protect the environment: Handling and disposing of used antifreeze can be subject to federal, state, and local laws and regulations. Use authorized waste disposal facilities, including civic amenity sites and garages providing authorized facilities for the receipt of used antifreeze. If in doubt, contact local authorities or the EPA for guidance as to proper handling of used antifreeze.

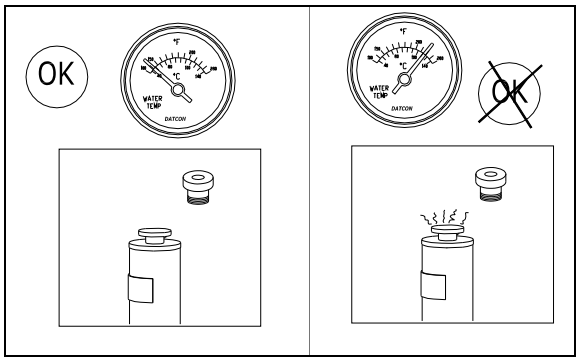

Drain the cooling system by opening the drain valve on the heat exchanger and removing the plug in the bottom of the water inlet.

A drain pan with a capacity of 20 liters [5 gal] will be adequate in most applications.

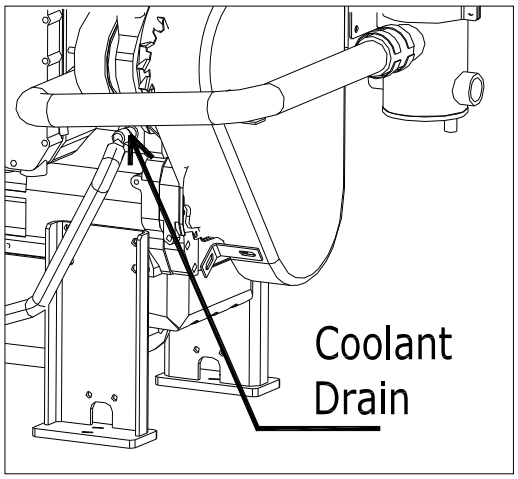

Check for damaged hoses and loose or damaged hose clamps.

Replace as required.

Check the heat exchanger for leaks, damage, and buildup of dirt.

Clean and repair as required.

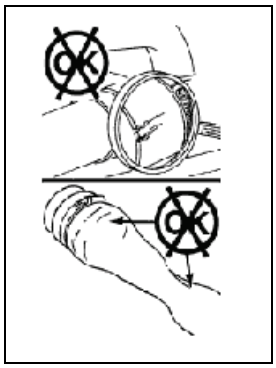

Flush

CAUTION

During filling, air must be vented from the engine coolant passages. The air vents through the "jiggle pin" openings to the top heat exchanger hose and out the fill opening. Additional venting is provided for engines equipped with an after cooler. Open the petcock during filling.

NOTE: Adequate venting is provided for a fill rate of 10 liters/minute [2.6 gal/min].

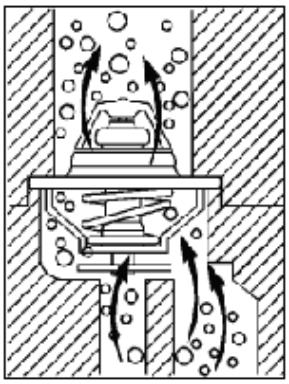

NOTE: Do not install the heat exchanger cap. The engine is to be operated without the cap for this process.

Fill the system with a mixture of sodium carbonate and water (or a commercially available equivalent).

NOTE: Use 0.5 kg [1.0 lb] of sodium carbonate for every 23 liters [6 gal] of water.

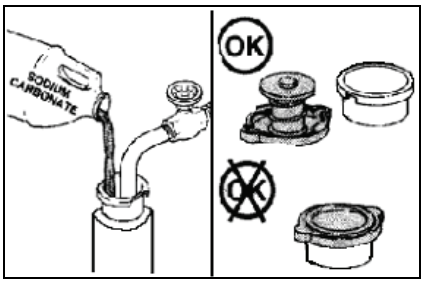

Operate the engine for 5 minutes with the coolant temperature above 82°C [180°F].

Shut the engine off, and drain the cooling system.

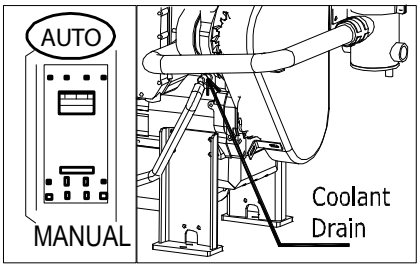

Fill the cooling system with clean water.

NOTE: Be sure to vent the engine and aftercooler for complete filling.

NOTE: Do not install the radiator cap or the new coolant filter.

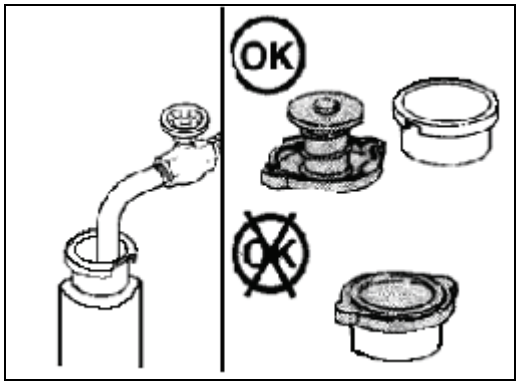

Operate the engine for 5 minutes with the coolant temperature above 82°C [180°F].

Shut the engine off.

Drain the cooling system.

NOTE: If the water being drained is still dirty, the system must be flushed again until the water is clean.

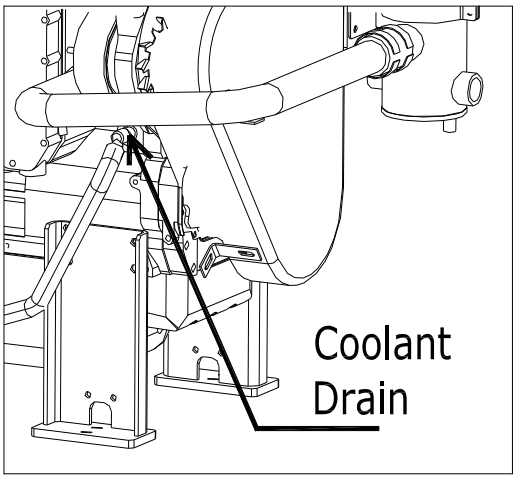

Fill

CAUTION

The system must be filled properly to prevent air locks. During filling, air must be vented from the engine coolant passages.

The system has a design fill rate of 10 liters/minute [2.8 gal/min].

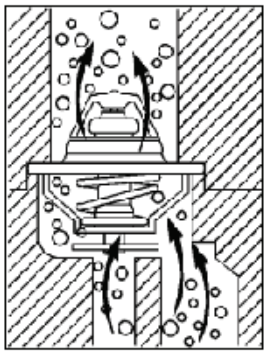

CAUTION

Never use water alone for coolant. Damage from corrosion can be the result of using water alone for coolant.

Use a mixture of 50-percent water and 50-percent ethylene glycol antifreeze to fill the cooling system.

Coolant Capacity (Engine Only): 4.50 liters [1.19 US Gal]

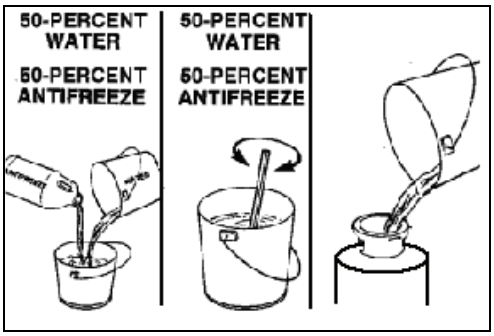

WARNING

Before removing the pressure cap, wait until the coolant temperature is below 50°C [120°F]. Failure to do so can cause personal injury from heated coolant spray.

Install the pressure cap (Cummins Fire Power Part No 11407.).

Operate the engine until it reaches a temperature of 82°C [180°F], and check for coolant leaks.

Check the coolant level again to make sure the system is full of coolant, or that the coolant level has risen to the hot level in the recovery bottle on the system, if so equipped.

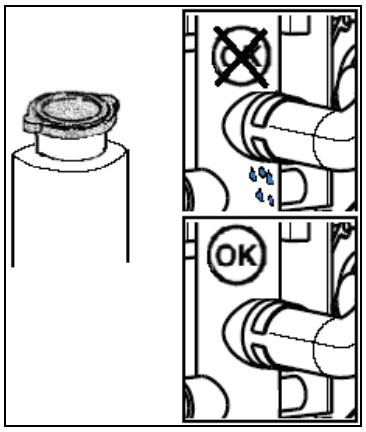

Procedure 28 Change Coolant Filter

WARNING

A small amount of coolant can leak when servicing the coolant filter with the shutoff valve in the OFF position. To reduce the possibility of personal injury, avoid contact with hot coolant.

WARNING

Coolant is toxic. Keep away from children and pets. If not reused, dispose of in accordance with local environmental regulations.

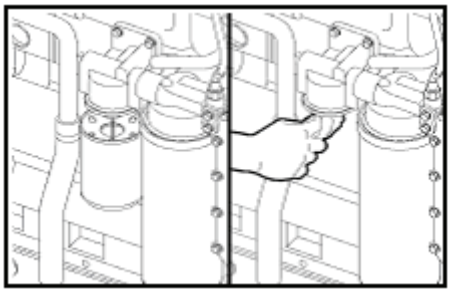

CAUTION

Use caution when draining coolant that coolant is not spilled or drained into the bilge area. Do not pump the coolant overboard. If the coolant is not reused, it must be discarded in accordance with local environmental regulations.

Remove and discard the coolant filter.

Clean

Clean the gasket surface.

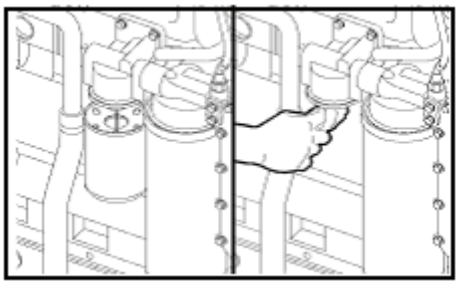

Install

CAUTION

Do not allow oil to get into the filter. Oil will damage the DCA.

CAUTION

Mechanical over-tightening can distort the threads or damage the filter head.

Apply a thin film of lubricating oil to the gasket sealing surface before installing the new coolant filter.

Install the coolant filter on the filter head. Tighten the filter until the gasket contacts the filter head surface.

Tighten the coolant filter an additional 1/2 to 3/4 of a turn, or as specified by the filter manufacturer.

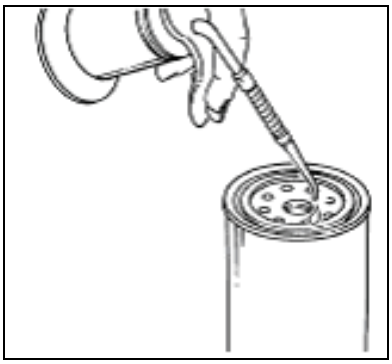

Test Run

Install the coolant system pressure cap (Cummins Fire Power Part No. 11407).

Operate the engine.

Check for coolant leaks.

After the air has been purged from the system, check the coolant level again.

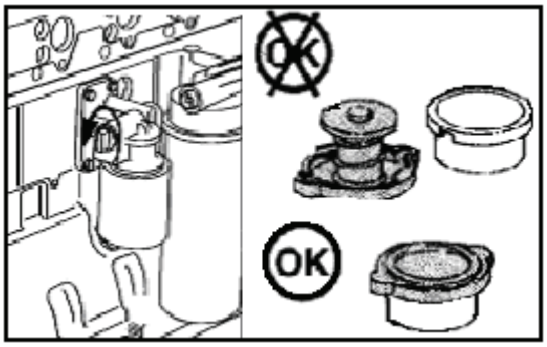

Procedure 29 **Vent Fuel Supply Lines**

General Information

Controlled venting is provided at the injection pump through the fuel drain manifold. Small amounts of air introduced by changing the filters or injection pump supply line will be vented automatically if the fuel filter is changed in accordance with the instructions. No manual bleeding of fuel lines is required.

NOTE: Manual bleeding is required if any of the following is true:

The fuel filter is not filled prior to installation.

The injection pump is replaced.

High-pressure fuel line connections are loosened or lines replaced.

Engine is initially started or started after an extended period of no engine operation.

Low Pressure Fuel Line(s)



Open the vent screw.

Allow fuel to drain until the fuel flowing from the fitting is free of air.

Tighten the vent screw.

Torque value: 8 N•m (6ft-lb)

The low pressure fuel lines are bled by pumping the hand lever on the filter head.

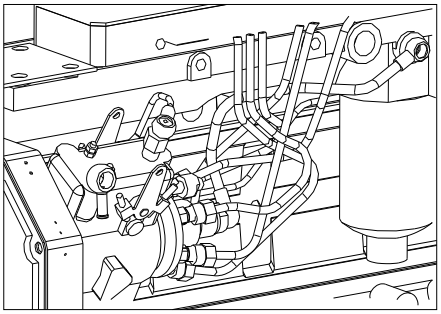

High Pressure Fuel Line(s)



WARNING

The pressure of the fuel in the line is sufficient to penetrate the skin and cause serious bodily harm.

Venting is accomplished by loosening one or more fittings at the injectors and cranking the engine to allow entrapped air to bleed from the lines.

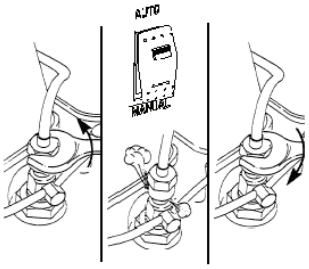

WARNING

Do not bleed a hot engine as this could cause fuel to spill onto a hot exhaust manifold creating a danger of fire.

With the engine at idle, vent one line at the time until the engine runs smoothly.

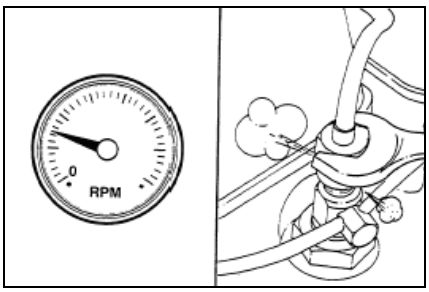

Retighten Line Fittings

Tighten the line fittings and check for leaks.

Torque Value: 22 N•m [16 ft-lb]



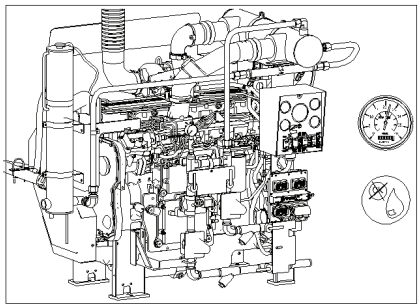

Procedure 30 Vent Injection Pump

WARNING

The pressure of the fuel in the line is sufficient to penetrate the skin and cause serious personal injury. Wear gloves and protective clothing.

Loosen the fittings at the injectors, and crank the engine to allow entrapped air to bleed from the lines. Tighten the fittings.

WARNING

It is necessary to put the engine in the run position. Because the engine could start, be sure to follow all the safety precautions. Use the normal engine starting procedure.

Start the engine and vent one line at a time until the engine runs smoothly.

NOTE: Do not engage the starter for more than 30 seconds each time when it is used to vent the system: Wait 2 minutes between engagements.

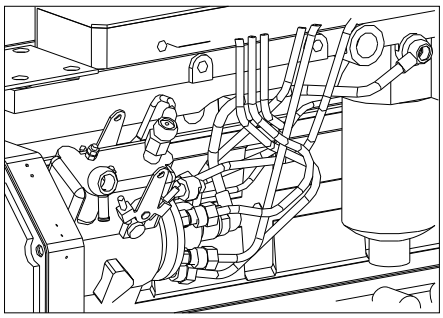

Every Year or 1000 Hours

General Information

All checks or inspections listed under daily or previous maintenance intervals must also be performed at this time, in addition to those listed under this maintenance interval, except for valve lash adjustment.

Procedure 31 Check Overspeed Switch Operation

Check the overspeed switch for operation.

Refer to Operating Instructions in Section 3 of the Operational Manual for settings.

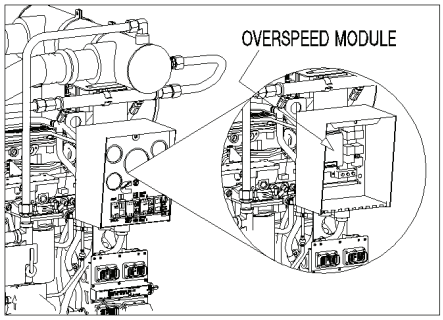

Procedure 32 Check Drive Belt, Tensioner Bearing and Belt Tension

Inspect

Remove heat exchanger, piping and hoses

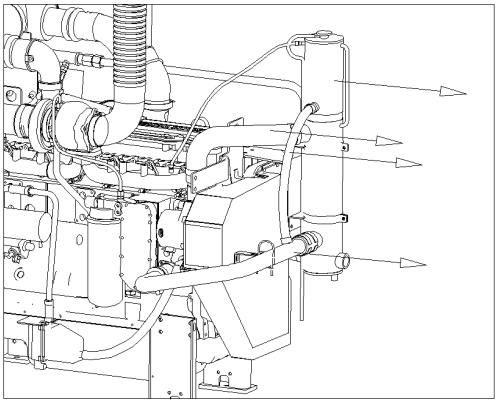

Remove the belt guard.

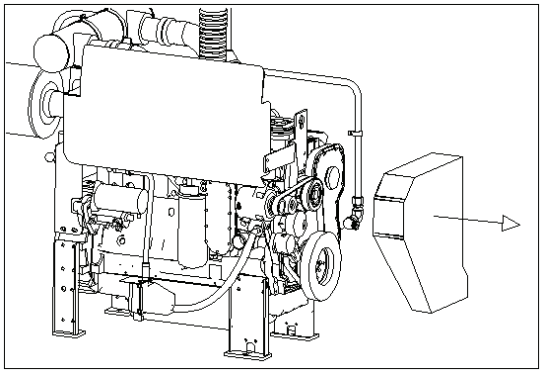

Remove the drive belt.

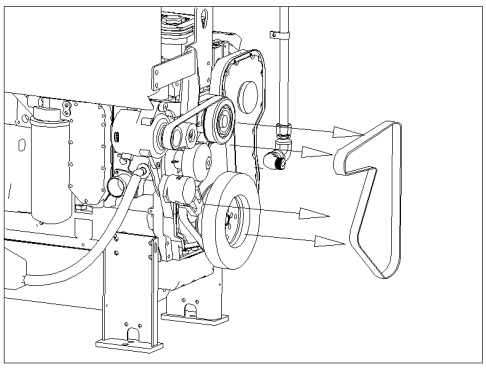

Poly-Vee Belt

Visually inspect the belt.

Check the belt for intersecting cracks. Transverse (across the belt width) cracks are acceptable. Longitudinal (direction of belt length) cracks that intersect with transverse cracks are not acceptable.

Replace the belt if it is frayed or has pieces of material missing.

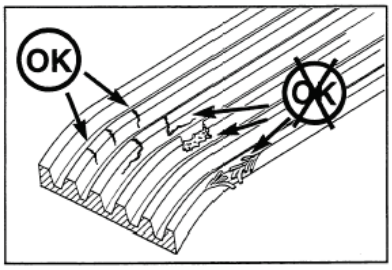

Belt damage can be caused by:

Incorrect tension

Incorrect size or length

Pulley misalignment

Incorrect installation

Severe operating environment

Oil or grease on the belts

Cogged Belt

Inspect the belts daily. Replace the belts if they are cracked, frayed, or have chunks of material missing. Small cracks are acceptable.

Adjust the belts that have a glazed or shiny surface, which indicates belt slippage. Correctly installed and tensioned belts will show even pulley and belt wear. Refer to Section A for belt adjustment and replacement procedures.

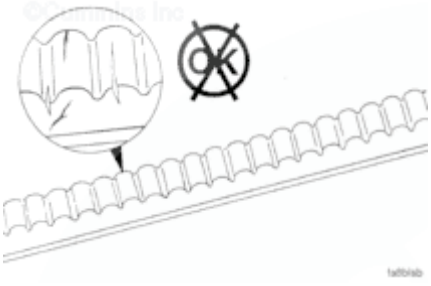

Belt damage can be caused by:

Incorrect tension

Incorrect size or length

Pulley misalignment

Incorrect installation

Severe operating environment

Oil or grease on the belts

Measure the belt tension in the center span of the pulleys.

Refer to the Belt Tension Chart in Section V for the correct gauge and tension value for the belt width used.

An alternate method (deflection method) can be used to check belt tension by applying 110 N [25 lbf] force between the pulleys on v-belts. If the deflection is more than one belt thickness per foot of pulley center distance, the belt tension must be adjusted.

Refer to Section A for adjustment.

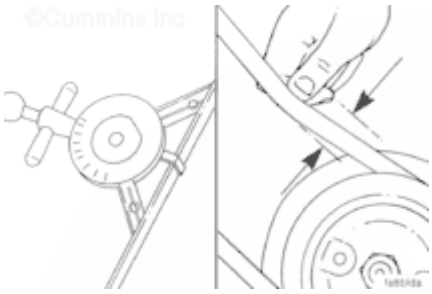

For cogged belts, make sure that the belt tension gauge is positioned so that the center tensioning leg is placed directly over the high point (hump) of a cog. Other positioning will result in incorrect measurement.

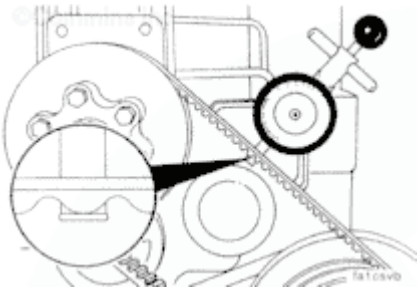

Check the tensioner bearing.

The tensioner pulley should spin freely with no rough spots detected under hand pressure.

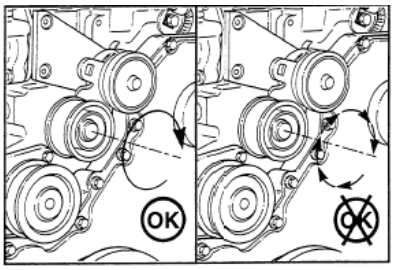

Replace tensioner or bearing if defective.

Install the drive belt.

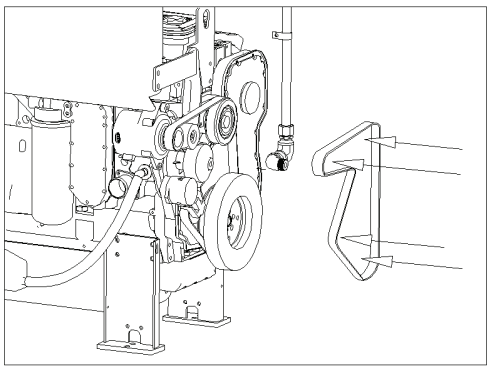

Torque Value: Tension Limit: 360 to 490 N•m [266 to 361 ft-lb]

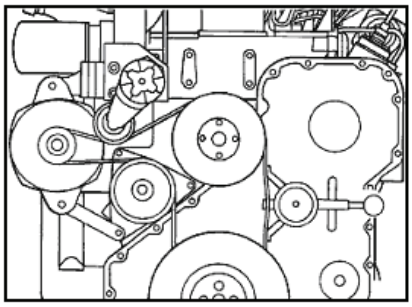

Check the location of the drive belt on the belt tensioner pulley. The belt should be centered on, or centered close to the middle of, the pulley. Unaligned belts, either too far forward or backward, can cause belt wear, belt roll-off failures, or increase uneven tensioner bushing wear.

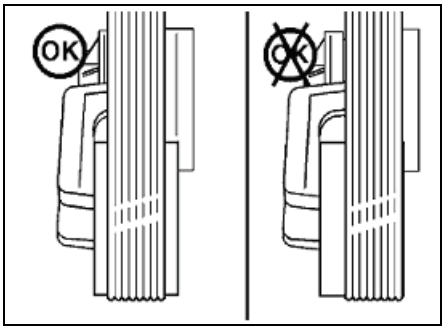

Use the Cummins belt tensioner gauge, Part No. 3822524, to measure the tension in the drive belt. This needs to be in the range of 360 to 490 N•m [266 to 361 ft-lb].

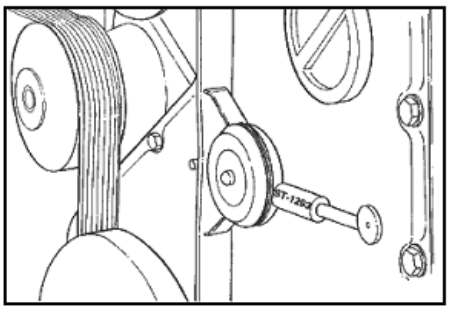

Check the tensioner arm, pulley, and stops for cracks. If any cracks are noticed, the tensioner must be replaced.

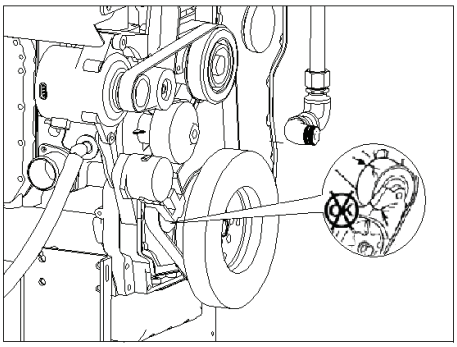

With the belt on, verify that neither tensioner arm stops are in contact with the spring casing stop. If either stop is touching, the drive belt must be replaced. After replacing the belt, if the tensioner arm stops are still in contact with the spring casing stop, replace the tensioner.

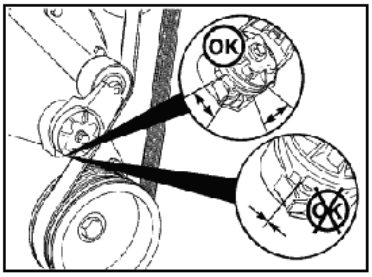

Remove the drive belt, and check the torque of the tensioner capscrew. After checking the torque, use a breaker bar with a 3/8-inch ratchet to rotate the tensioner slowly away from the area of belt contact. If the arm rotates with any roughness or hesitancy, replace the tensioner.

Torque Value: 43 N•m [32 ft-lb]

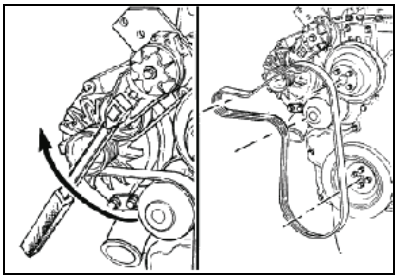

Check the belt for damage. Transverse (across the belt width) cracks are acceptable. Longitudinal (direction of the belt length) cracks that intersect with transverse cracks are not acceptable.

If the belt is frayed or has any piece of material missing, the belt is unacceptable and needs to be replaced.

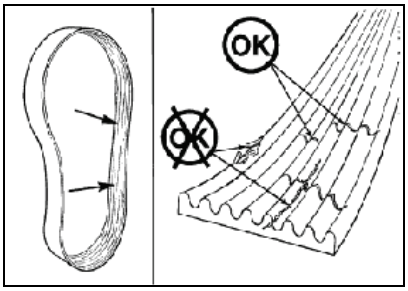

With the belt removed, verify that the tensioner arm stop is in contact with the spring case stop.

If these two are not touching, the tensioner must be replaced.

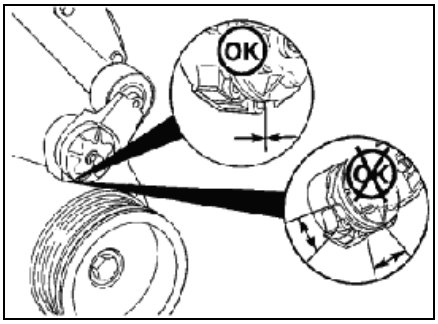

With the belt removed, check to be sure that the tensioner pulley rotates freely.

Measure the clearance between the tensioner spring case and the tensioner arm to verify tensioner wear-out and uneven bearing wear.

If the clearance exceeds 3 mm [0.12 in] at any point, the tensioner failed and must be replaced as a complete assembly.

Experience has revealed that tensioners generally will show a larger clearance gap near the lower portion of the spring case, resulting in the upper portion rubbing against the tensioner arm.

Always replace the belt when a tensioner is replaced.

Tensioner cap

Tensioner arm

Spring case

Tensioner pulley

Clearance gap

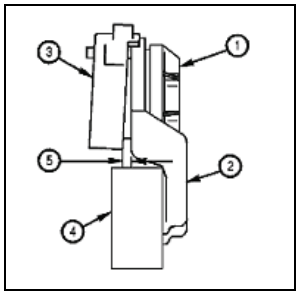

Inspect the tensioner for evidence of the tensioner arm contacting the tensioner cap.

If there is evidence of the two areas making contact, the pivot tube bushing has failed and the tensioner must be replaced.

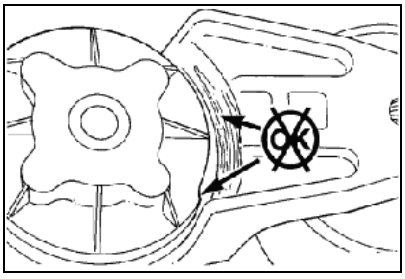

Procedure 34 **Adjust Valve Lash Clearance**

General Information

Diagnosing Component Malfunctions — Rocker Lever, Valve Stem, Push Tube, Tappet, and Camshaft

The rocker lever group consists of the rocker lever assemblies, rocker assembly oil manifold, valve cover, and crankcase breather.

Each cylinder of the engine has a separate rocker lever assembly.

The pedestal support has drillings to route the oil flow to the shaft and levers.

The rocker levers are push tube actuated and use an adjusting screw to control the clearance between the rocker lever and valve stem.

The rocker levers do not use a bushing in the bore for the rocker lever shaft.

The rocker lever must be replaced if the bore is damaged or worn beyond the specification limit.

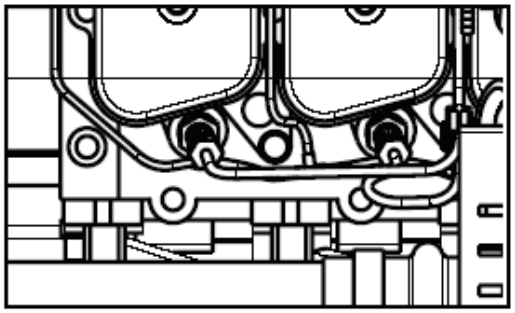

The ball end of the push tube fits into the ball socket in the tappet.

The other end of the push rod has a ball socket in which the ball end of the rocker lever adjusting screw operates.

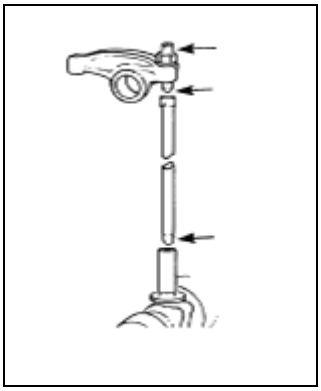

Excessive valve lash can indicate a worn valve stem, push tube, valve tappet, or rocker lever.

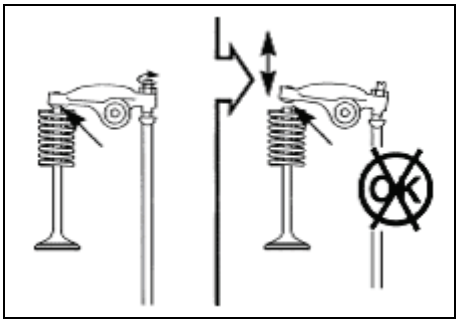

Loose rocker levers and the need to reset the valve clearance frequently can also indicate camshaft lobe or tappet wear.

If an inspection of the rocker levers, valve stems, and push tubes does not show wear, then tappet and/or camshaft lobe wear can be suspected.

Refer to a Cummins Authorized Repair Location.

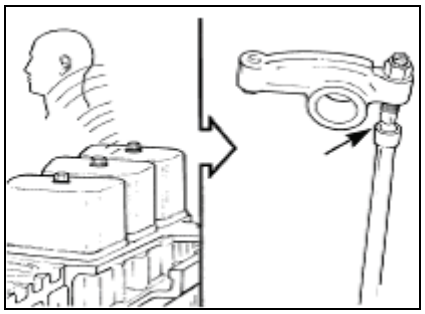

CAUTION

Anytime a new camshaft is installed, new tappets and push tubes must also be installed. Failure to do so can cause severe engine damage.

The camshaft lobes can be inspected after removing the lubricating oil pan.

The tappets can also be inspected with the lubricating oil pan removed.

Remove the push tubes, lift the tappets, and inspect the tappet faces.

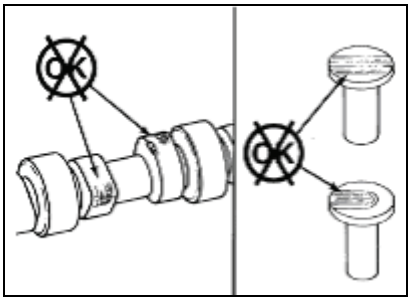

Severely damaged camshaft journal(s) can generate metal chips that will be found in the lubricating oil pan and oil filter.

NOTE: As the clearance between the camshaft bushing(s) and camshaft journal(s) increase, oil pressure and volume will decrease, causing damage to the camshaft and tappets.

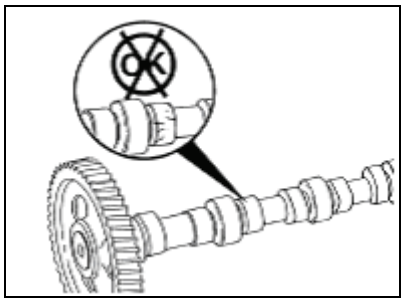

Refer to Engine Identification in Section 2.

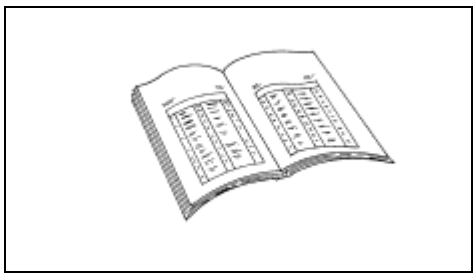

Preparatory Steps

Remove the rocker lever covers.

Locate top dead center (TDC) for cylinder number 1.

Use a 1/2-inch drive and Engine Barring Tool, Part Number 3824591, to rotate the engine (clockwise when facing the damper) until cylinder number 4 (for 4-cylinder) or cylinder number 6 (for 6-cylinder) intake rocker arm starts to open the intake valve.

NOTE: Wiggle the rocker arm while barring the engine; when the rocker arm gets tight, stop barring.

Remove the rocker lever covers.

Locate top dead center (TDC) for cylinder number 1 by barring the crankshaft slowly while pressing on the engine timing pin.

Barring the engine is recommended from the flywheel on the rear of the engine.

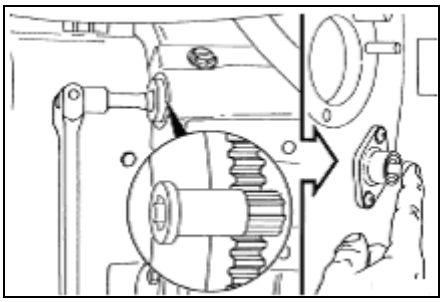

When the timing pin engages in the hole in the camshaft gear, cylinder number 1 is at TDC on the compression stroke.

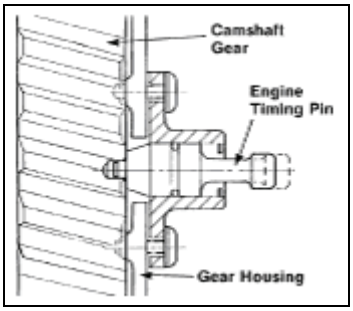

CAUTION

To reduce the possibility of engine or timing pin damage, you must disengage the timing pin after locating top dead center.

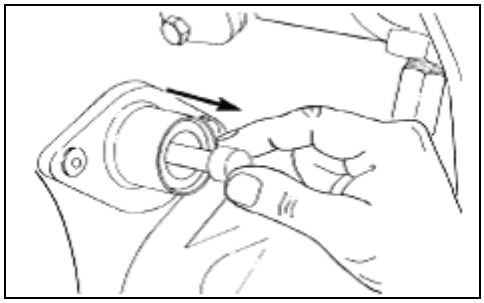

Adjust

NOTE: The clearance is correct when some resistance is “felt” when the feeler gauge is slipped between the valve stem and the rocker lever.

NOTE: Caution must be used when setting the exhaust valve lash on marine cylinder heads with rotators. The top of the valve stem is slightly recessed below the top of the valve rotator.

Measurements

- **Intake Clearance: 0.254 mm [0.010 in]**
- **Exhaust Clearance: 0.508 mm [0.020 in]**

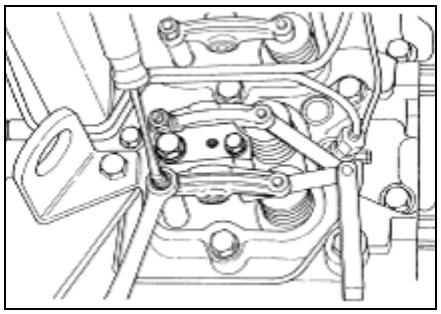

Four-Cylinder Engine Adjustment

Make sure the engine is at top dead center (TDC) for cylinder number 1. Set only valves indicated by the arrows (E = exhaust, I = intake). Do not set valves that are not indicated. Holding the locknut steady with the wrench, adjust the valve clearance with the screwdriver or Allen wrench. Tighten the locknut and measure the valve lash again.

Torque Value: 24 N•m [18 ft-lb]

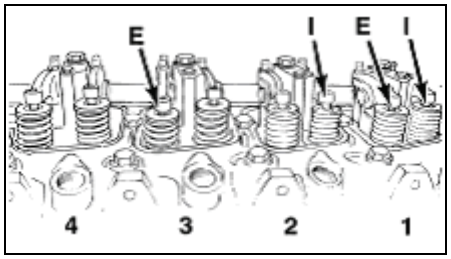

CAUTION

To avoid engine or pin damage, be sure the timing pin is disengaged.

Mark the vibration damper and rotate the crankshaft 360 degrees.

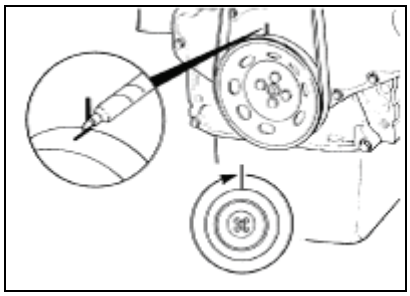

Adjust the valves as indicated in the illustration.

Torque Value: 24 N•m [18 ft-lb]

Set only valves indicated by the arrows (E = exhaust, I = intake). Do not set valves that are not indicated.

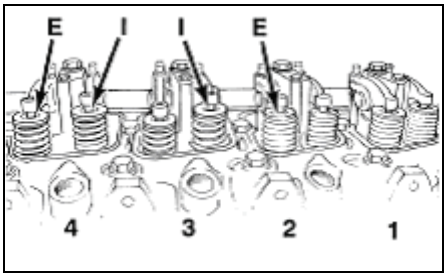

Six-Cylinder Engine Valve Adjustment

Make sure the engine is at top dead center (TDC) for cylinder number 1.

Set only the valves indicated by the arrows in the illustration (E = exhaust, I = intake).

Holding the locknut steady with the wrench, adjust the valve clearance with the screwdriver or Allen wrench.

Tighten the locknut, and measure the valve lash again.

Torque Value: 24 N•m [18 ft-lb]

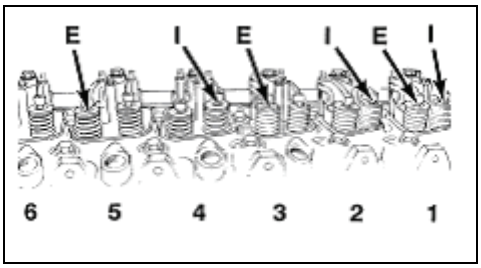

CAUTION

To reduce the possibility of engine or pin damage, be sure timing pin is disengaged.

Mark the pulley, and rotate the crankshaft 360 degrees.

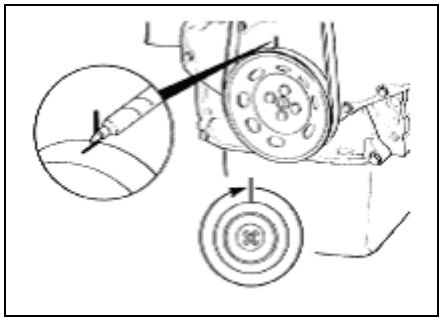

Adjust the valves as indicated in the illustration.

Set only the valves indicated by the arrows in the illustration (E = exhaust, I = intake). Do not set valves that are not indicated.

Torque Value: 24 N•m [18 ft-lb]

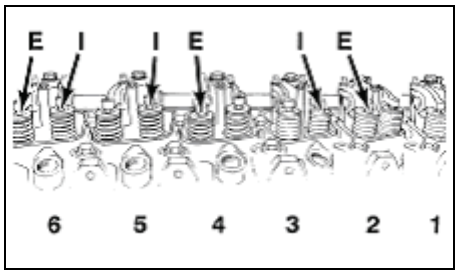

Finishing Steps

Check the rocker lever covers for cracks.

Install the rocker lever covers.

Tighten the capscrews. Refer to Engine Component Torque Values in Section 10 for torque value.

Procedure 35 **Inspect Turbocharger**

Remove the air intake and the exhaust piping.

Look for damaged or cracked compressor or turbine blades.

Check to see that the turbocharger shaft spins freely.

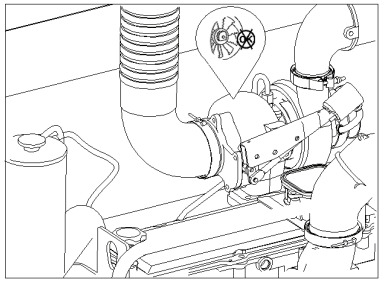

If the compressor impeller is damaged, inspect the intake piping and filter element for damage.

Repair any damage before operating the engine.

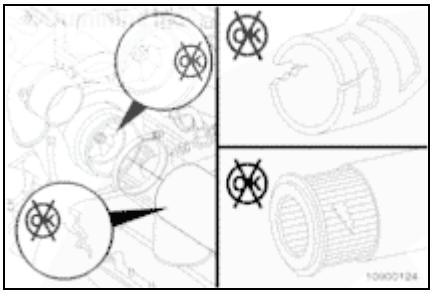

Remove the exhaust pipe from the turbocharger.

Inspect the turbine wheel for damage.

Replace the turbocharger if damage is found. Contact a Cummins Authorized Repair Location for replacement.

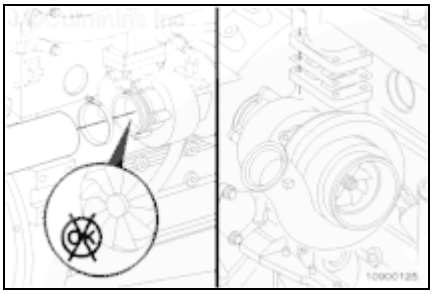

NOTE: If visual inspections or dimensional checks indicate a problem, contact a Cummins Authorized Location for Assistance.

The turbocharger must be removed for replacement or rebuild if the clearances are beyond the limits.

Install the air intake and the exhaust piping and tighten the clamps.

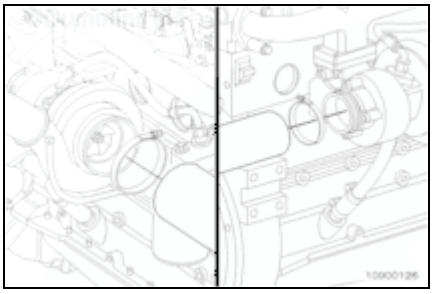

Every Two Years or 2000 Hours

General Information

All checks or inspections listed under daily or previous maintenance intervals must also be performed at this time, in addition to those listed under this maintenance interval.

Procedure 35 Inspect Vibration Damper

CAUTION

Check the damper for evidence of fluid loss, dents, and wobble.

Visually inspect the vibration damper thickness for any deformation or raising of the damper front cover plate.

If any variations or deformations are detected, refer to the Troubleshooting and Repair Manual for detailed inspection procedures.

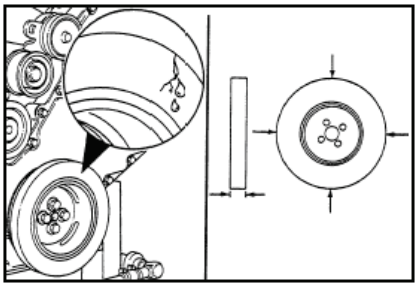

Procedure 36 Inspect Water Pump

Inspect the water pump for drive pulley wobble and grease or water leakage around the water pump shaft.

Replace with a new or rebuilt, pre-lubricated unit as necessary.

Refer to the Troubleshooting and Repair Manual for more information.

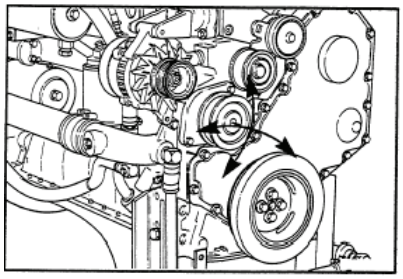

Procedure 37 Engine Steam Cleaning

WARNING

When using a steam cleaner, wear safety glasses or a face shield, as well as protective clothing. Hot steam can cause serious personal injury.

Steam is the best method of cleaning a dirty engine or a piece of equipment. If steam is **not** available, use a solvent to wash the engine.

Protect all electrical components, openings, and wiring from the full force of the cleaner spray nozzle.

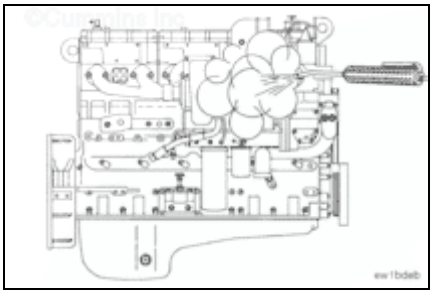

Every Four Years or 5000 Hours

General Information

All maintenance checks and inspections listed in previous maintenance intervals must also be performed at this time, in addition to those listed under this maintenance interval.

Procedure 38 **Inspect Overhead Set**

Preparatory Steps

Remove the crankcase breather tube, rocker lever cover mounted breather only.

Remove the variable geometry turbocharger actuator air supply line, if equipped.

Remove the capscrews.

Remove the rocker lever cover and gasket.

NOTE: Rocker lever cover configurations will be different based upon if the cover is center bolted or perimeter bolted.

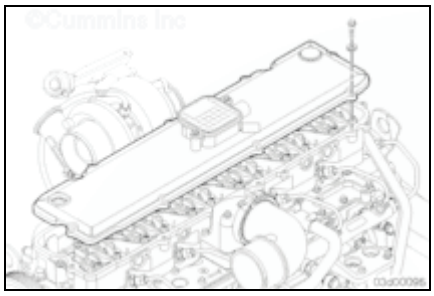

Remove the plastic fuel pump drive cover located on the front of the engine.

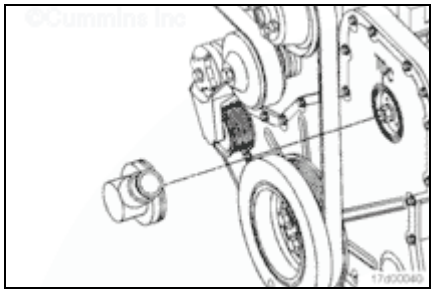

Adjust

CAUTION

Engine coolant temperature should be less than 60°C [140°F].

Use the barring tool, Part Number 3824591, or equivalent, and rotate the crankshaft to align the top dead center marks on the gear cover and the fuel pump gear.

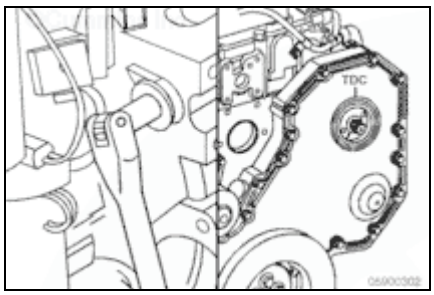

With the engine in this position, lash can be checked on the following rocker arms: 1I, 1E, 2I, 3E, 4I, and 5E.

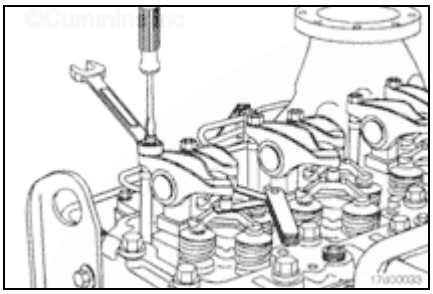

Lash Check Limits

	mm		in
Intake	0.152	MIN	0.006
	0.559	MAX	0.022
Exhaust	0.381	MIN	0.015
	0.813	MAX	0.032

NOTE: Lash checks are performed as part of a troubleshooting procedure, and resetting is not required during checks as long as the lash measurements are within the above limits.

Measure lash by inserting a feeler gauge between the crosshead and the rocker lever ball insert and socket while lifting up on the end of the rocker arm. If the lash measurement is out of specification, loosen the locknut and adjust the lash to the nominal specification.

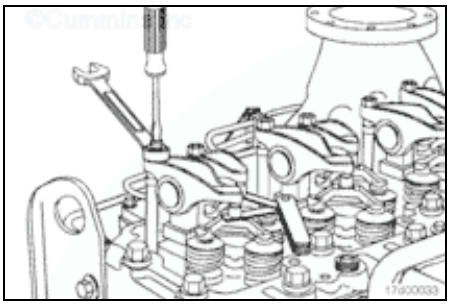

Lash Reset Specifications

	mm		in
Intake	0.305	NOM	0.012
Exhaust	0.559	NOM	0.022

NOTE: Lash resets are only required at the interval specified in the Maintenance Schedule, when lash is measured and found out of specification, or when engine repairs cause removal of the rocker arms and/or loosening of the adjusting screws.

Tighten the locknut and measure again.

Torque Value: 24 N•m [18 ft-lb]

Use the barring tool, Part Number 3824591, or equivalent, and rotate the crankshaft 360 degrees and measure lash for rocker arms 2E, 3I, 4E, 5I, 6I, and 6E. Reset the lash, if out of specification.

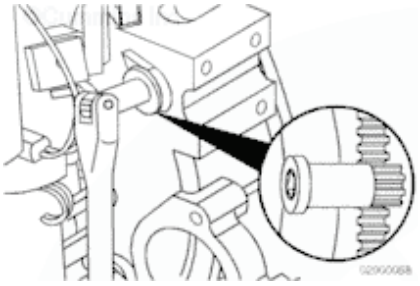

Finishing Steps

Center Bolted Rocket Lever Cover

Place the gasket on the cylinder head. Be sure the gasket is properly aligned around the cylinder head capscrews.

Install the rocker lever cover and capscrews.

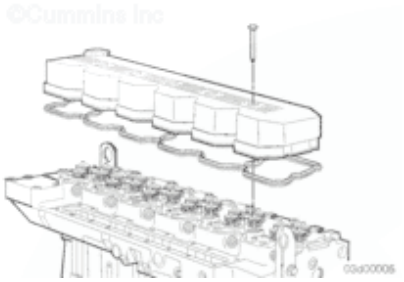

Tighten the capscrews.

Torque Value: 12 N•m [106 in-lb]

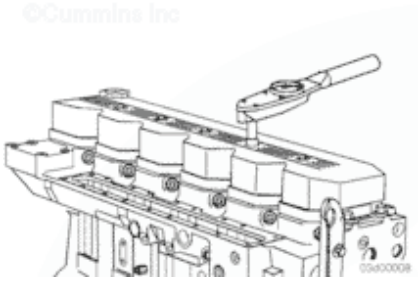

Perimeter Bolted Rocker Lever Cover

NOTE: If the gasket has been removed from the rocker lever cover, a new gasket must be used.

The following installation procedure must be used when installing the press-in gasket.

Press the molded gasket into the corners of the rocker lever cover.

Press the gasket around the capscrew mounting holes.

Press the remaining gasket into the rocker lever cover.

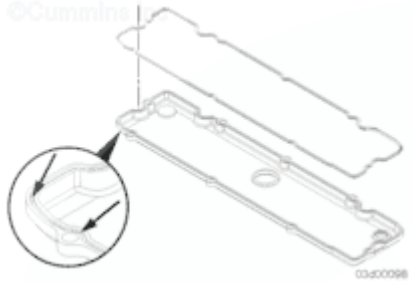

Install the rocker lever cover and capscrews.

Torque Value: 12 N•m [106 in-lb]



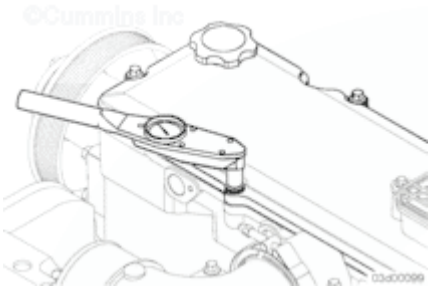

Install the crankcase breather tube, rocker lever cover mounted breather only.

Install the variable geometry turbocharger actuator air supply line, if equipped.

This Page Intentionally Left Blank

Section 6 – System Diagrams

Section Contents

Page

System Diagrams – Overview 6-3
Flow Diagram, Fuel System 6-4
Flow Diagram, Lubricating Oil System 6-5
Flow Diagram, Cooling System 6-9
Flow Diagram, Air Intake System 6-10
Flow Diagram, Exhaust System 6-12
Assembly Diagram, Raw Water Piping 6-13

THIS PAGE INTENTIONALLY LEFT BLANK

System Diagrams – Overview

General Information

The following drawings show the flow through the engine systems. Although parts can change between different applications and installations, the flow remains the same. The systems shown are:

- Fuel System
- Lubricating Oil System
- Cooling System
- Air Intake System
- Exhaust System
- Raw Water Piping

Knowledge of the engine systems can help you in troubleshooting, service, and general maintenance of your engine.

Flow Diagram, Fuel System

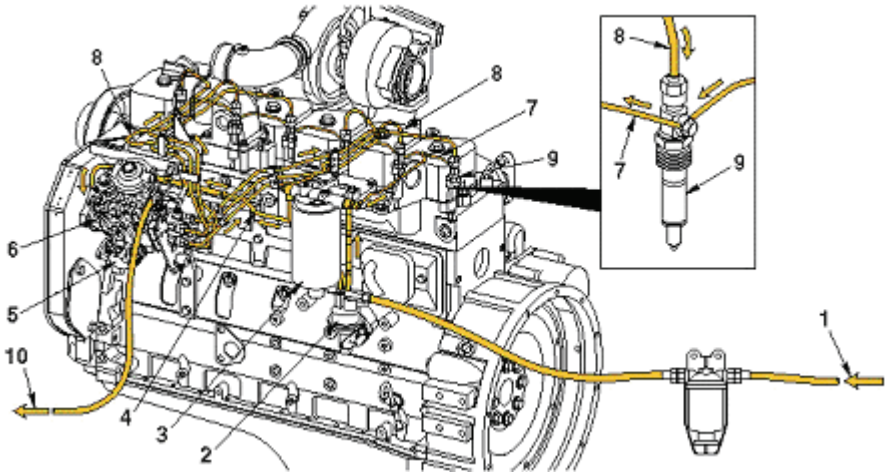

1. Fuel from supply tank
2. Fuel lift pump
3. Fuel filter/water separator
4. Low-pressure fuel supply lines
5. Bosch® KKSB cold start injection advance
6. Bosch® VE injection pump
7. Fuel drain manifold
8. High-pressure fuel supply lines
9. Bosch® closed nozzle injectors
10. Fuel return to supply tanks

Flow Diagram, Lubricating Oil System

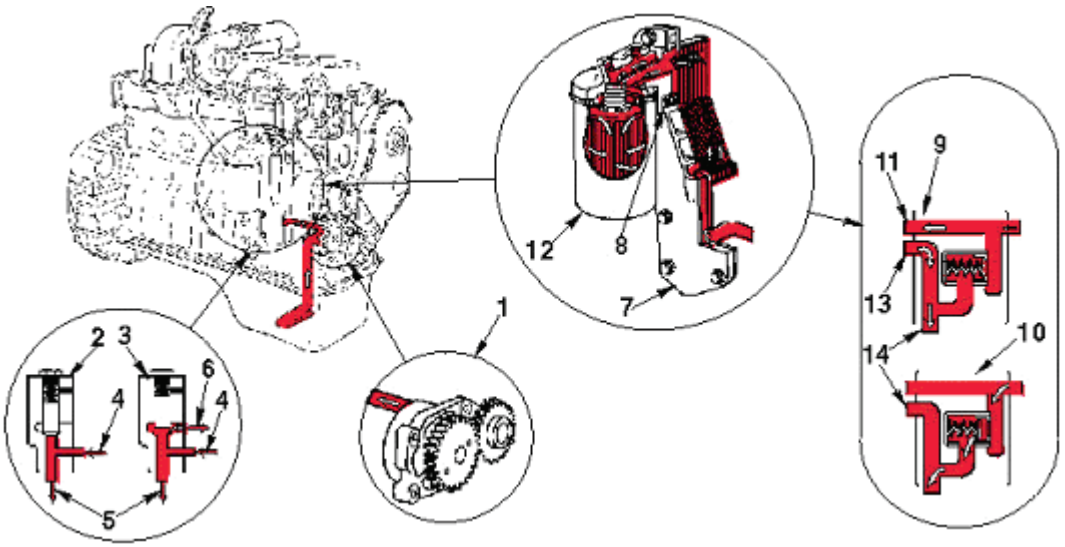

1. Lubricating Oil Pump
2. Pressure Regulating Valve Closed
3. Pressure Regulating Valve Open
4. From Lubricating Oil Pump
5. To Lubricating Oil Cooler
6. To Lubricating Oil Pan
7. Lubricating Oil Cooler
8. Filter Bypass Valve
9. Filter Bypass Valve Closed
10. Filter Bypass Valve Open
11. To Lubricating Oil Filter
12. Lubricating Oil Filter
13. From Lubricating Oil Filter
14. Main Lubricating Oil Rifle

Lubrication for the Turbocharger

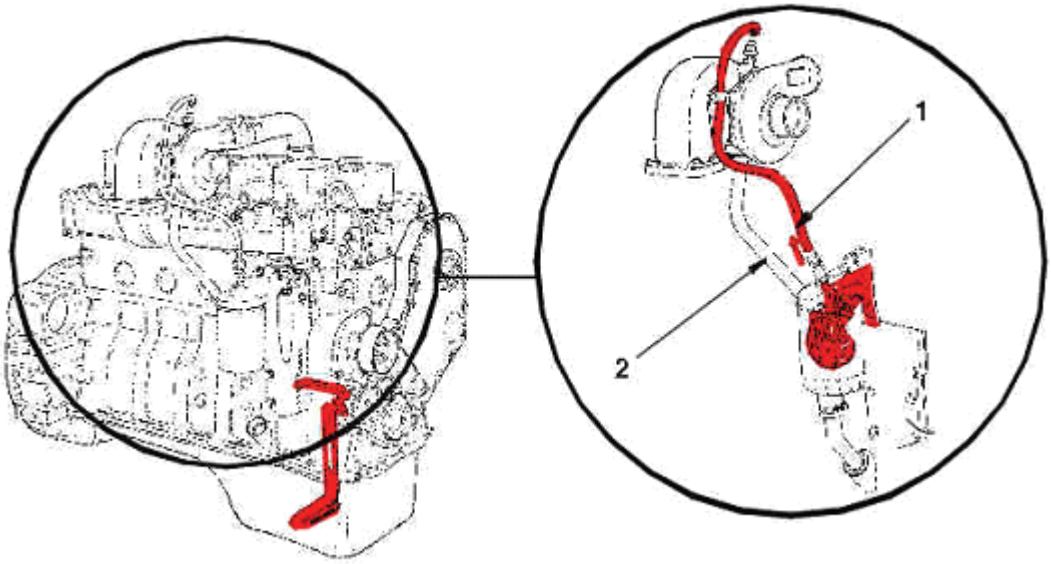

1. Lubricating Oil Supply
2. Lubricating Oil Drain

Lubrication for the Power Components

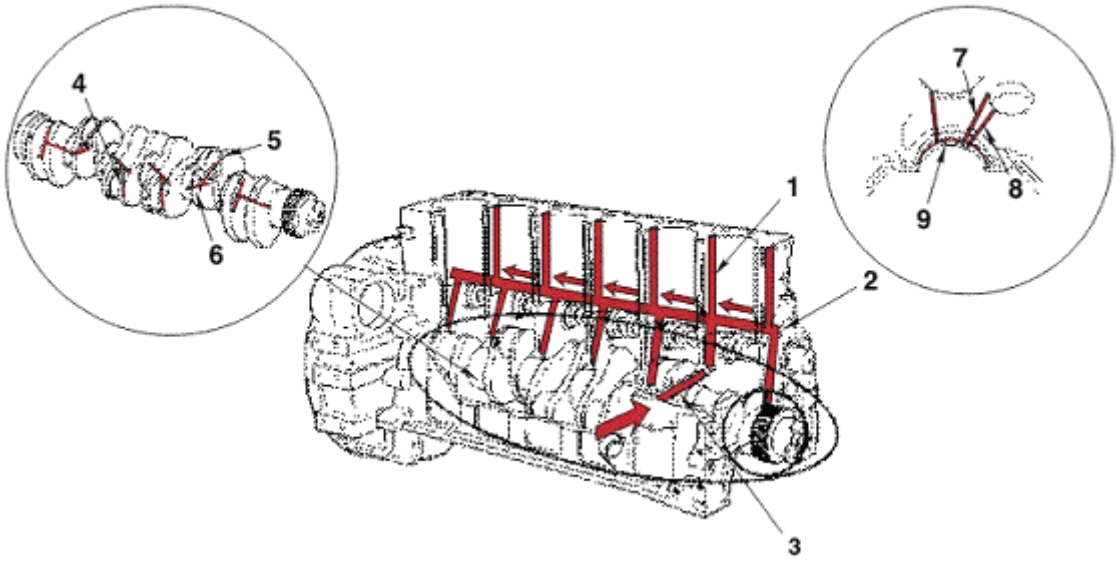

1. To Valve Train
2. Main Lubricating Oil Rifle
3. From Lubricating Oil Cooler
4. Connecting Rod Journal
5. To Connecting Rod Bearing
6. Crankshaft Main Journal
7. From Main Lubricating Oil Rifle
8. To Camshaft
9. To Piston Cooling Nozzle

Lubrication for the Overhead

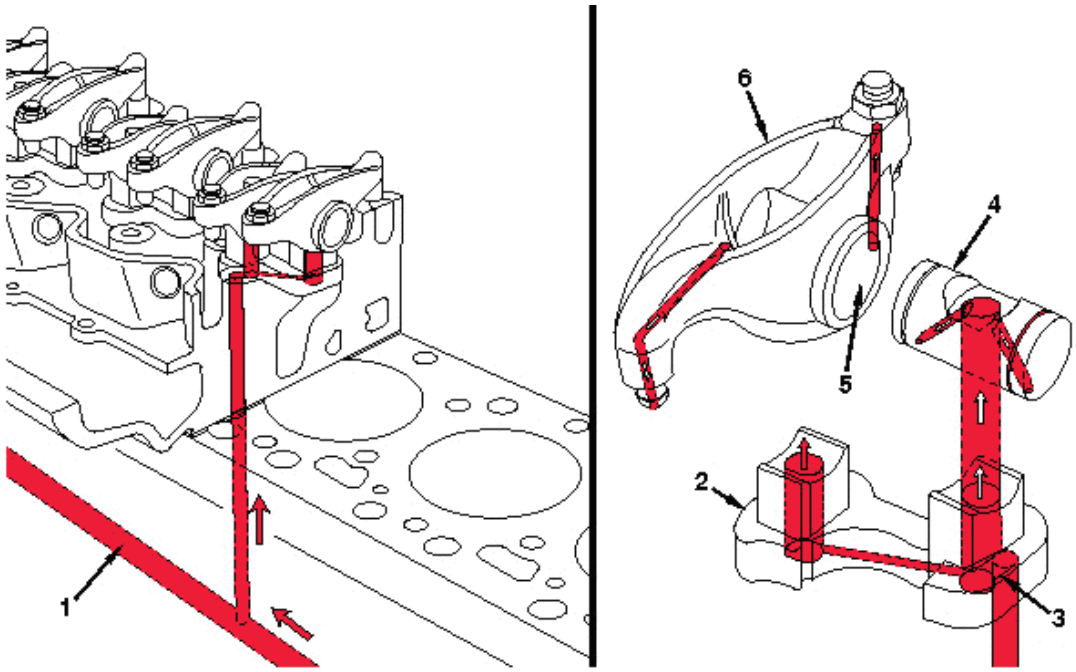

1. Main Lubricating Oil Rifle
2. Rocker Lever Support
3. Transfer Slot
4. Rocker Lever Shaft
5. Rocker Lever Bore
6. Rocker Lever

Flow Diagram, Cooling System

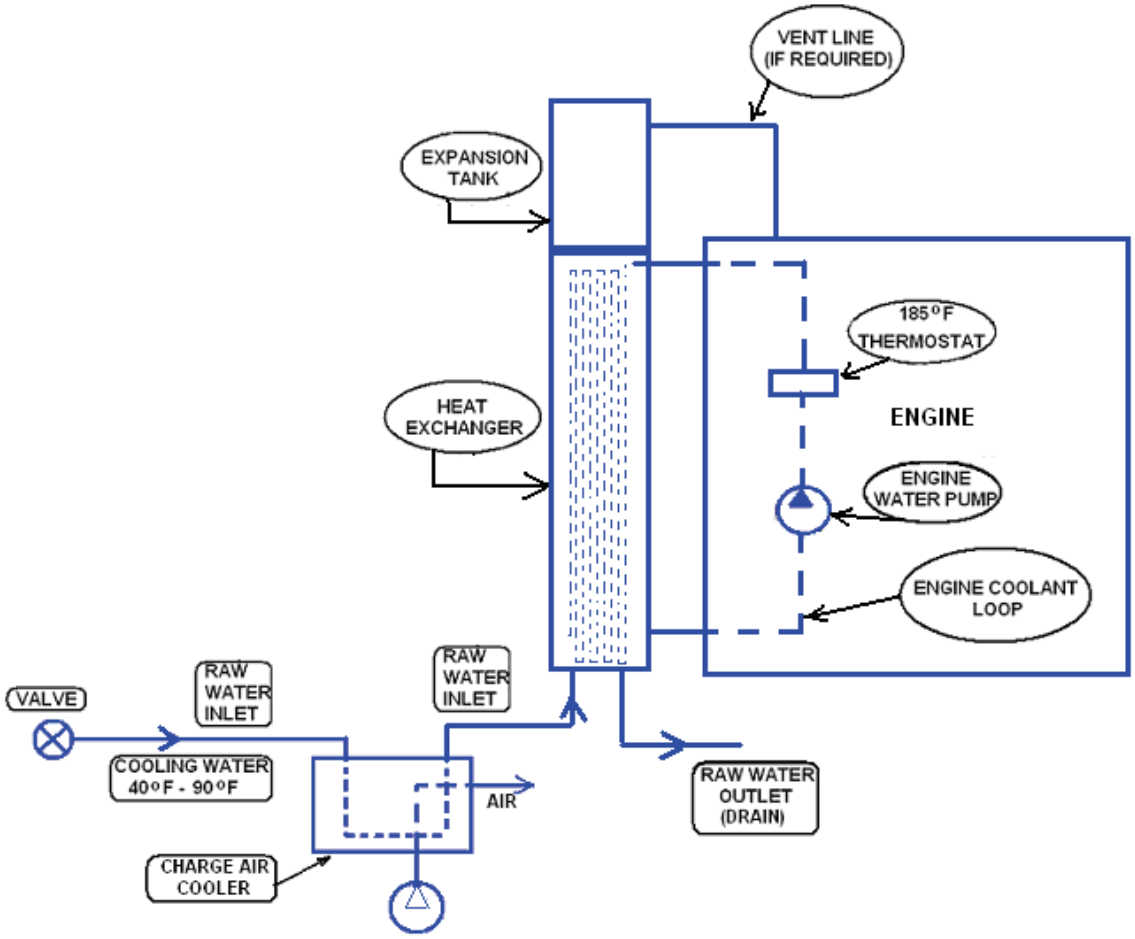

Flow Diagram, Air Intake System

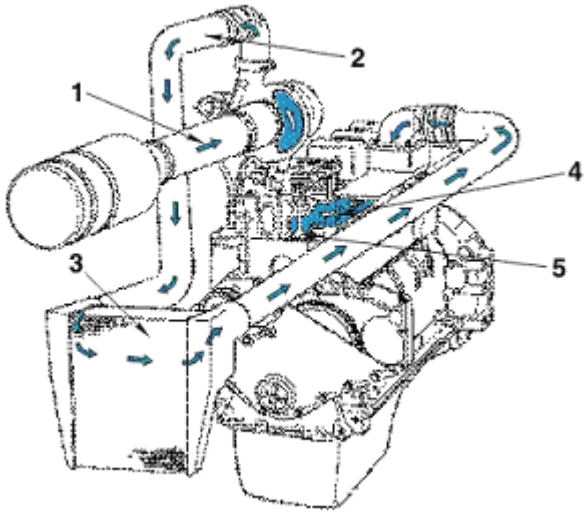

1. Intake air inlet to turbocharger
2. Turbocharger air to charge air cooler
3. Charge air cooler
4. Intake manifold
5. Intake valve

Flow Diagram, Air Intake System (Cont)

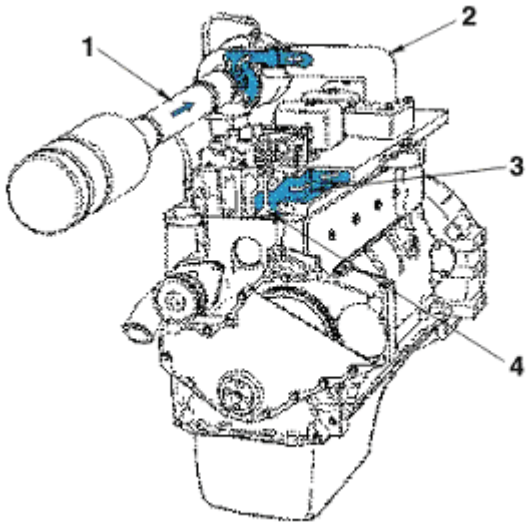

1. Intake air inlet to turbocharger
2. Air to intake manifold
3. Intake manifold
4. Intake valve

Flow Diagram, Exhaust System

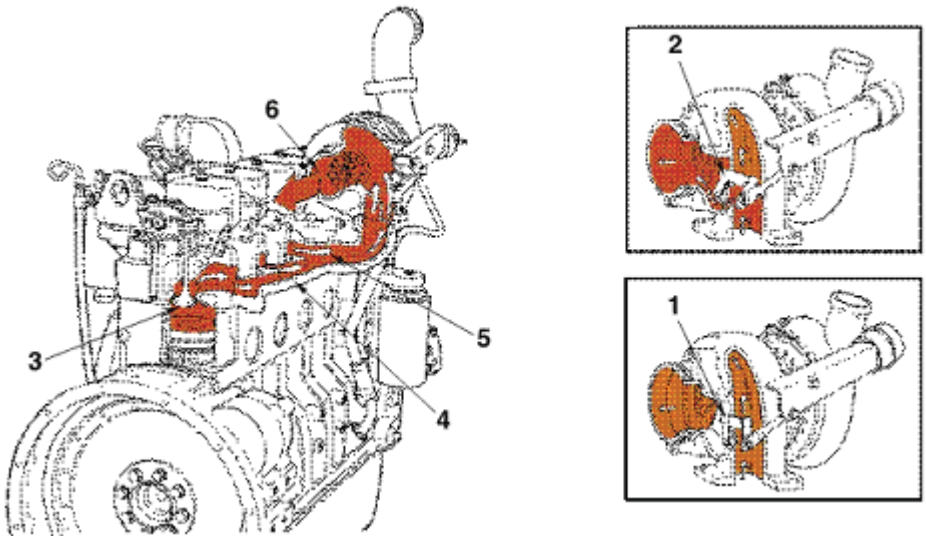

1. Wastegate closed
2. Wastegate open
3. Exhaust valve
4. Exhaust manifold
5. Turbocharger exhaust inlet
6. Turbocharger exhaust outlet

Assembly Diagram, Raw Water Piping

Raw water is used to cool the engine coolant and is supplied from the fire pump prior to the pump discharge flange. It is forced through a cooling loop by fire pump pressure to the engine heat exchanger. Then it is discharged to an open waste cone.

The following raw water manifold is available as an option (Cummins NPower Part No. 8682). If supplied by the customer, National Fire Protection Association (NFPA) Pamphlet No. 20 lists the components that are required. Refer to the Cooling System Specifications in Section 10 for process requirements. Refer to Raw Water Piping, Lineup, and Configuration in Section 3.

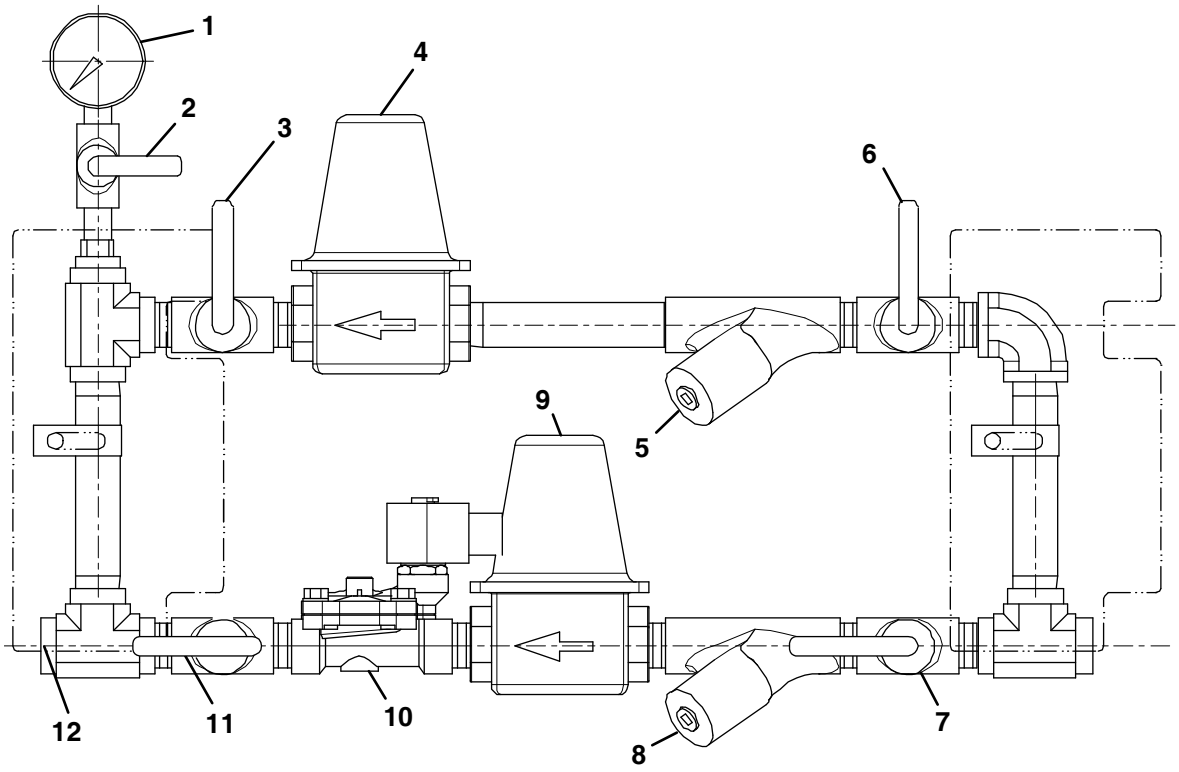

1.	Supply Pressure Gauge	7.	Normal Inlet Valve
2.	Supply Pressure Gauge Isolation Valve	8.	Normal Strainer
3.	Bypass Outlet Valve	9.	Normal Pressure Regulator
4.	Bypass Pressure Regulator	10.	Solenoid Operated Valve
5.	Bypass Strainer	11.	Normal Outlet Valve
6.	Bypass Inlet Valve	12.	3/4” supply to the heat exchanger

THIS PAGE INTENTIONALLY LEFT BLANK

Section 7 – Adjustment, Repair and Replacement

Section Contents

Page

Overview 7-5

Belts

Belt Guard Removal/Installation 7-7

Belt Removal/Installation 7-12

Automatic Belt Tensioner Removal/Installation 7-13

Coolant

Coolant Heat Exchanger Removal/Installation 7-15

Coolant Heater Removal/Installation 7-24

Coolant Hose Removal/Installation 7-29

Raw Water Pressure Regulator Removal/Installation 7-37

Raw Water Solenoid Valve Removal/Installation 7-41

Water Temperature Gauge Removal/Installation 7-44

Coolant Temperature Sender Removal/Installation 7-46

Coolant Temperature Switch Removal/Installation 7-48

Coolant Thermostat Removal/Installation 7-50

Coolant Thermostat Tests 7-58

Coolant Water Pump Removal/Installation 7-60

Electrical

Alternator Checks and Testing 7-65

Alternator Removal/Installation 7-68

Alternator Bracket Removal/Installation 7-70

Battery Isolator Removal/Installation 7-71

Engine Harness Removal/Installation 7-74

Voltmeter Removal/Installation 7-76

Battery Testing 7-78

Battery Removal/Installation 7-83

Check Battery Cables and Connections 7-87

Starter Motor Assembly Removal/Installation 7-88

Crank Solenoid Assembly Removal/Installation 7-90

Control Panel Fuse Replacement 7-93

Section Contents (Cont)

Page

Exhaust

Exhaust Manifold Removal/Installation 7-97
Exhaust Restriction Measurement 7-99
Exhaust Shield Removal/Installation 7-100

Fuel

Rotary Fuel Injection Pump Removal/Installation 7-103
Fuel Pump High Idle Speed 7-108
Fuel Pump Idle Speed 7-109
Fuel Pump Timing 7-110
Fuel Shutoff Valve Removal/Installation 7-111
Fuel Lift Pump Removal/Installation 7-113
Air in Fuel 7-115
Fuel Drain Line Restriction 7-120
Fuel Filter Removal/Installation 7-122
Measure Fuel Inlet Restriction 7-125
Fuel Drain Manifold Removal/Installation 7-126
Low Pressure Fuel Supply Lines Removal/Installation 7-128
Fuel Injectors Removal/Installation 7-130
Fuel-Water Separator Removal/Installation 7-132
Fuel Return Overflow Valve Removal/Installation 7-133
High Pressure Injector Supply Lines Removal/Installation 7-136

Section Contents (Cont)

Page

Intake Air

Air Leaks, Air Intake and Exhaust Systems 7-139
Intake Air Cleaner Element Removal/Installation 7-143
Air Intake Restriction Indicator Removal/Installation 7-145
Air Crossover Pipe Removal/Installation 7-146
Air Intake Manifold Removal/Installation 7-147
Turbocharger Removal/Installation 7-151
Turbocharger Oil Drain Line Removal/Installation 7-158
Turbocharger Oil Supply Line Removal/Installation 7-160
Turbocharger Wastegate Actuator Removal/Installation 7-161
Turbocharger Wastegate Valve Body Inspection 7-166
Aftercooler Removal/Installation 7-167

Oil

Lubricating Oil Cooler Removal/Installation 7-171
Lubricating Oil Dipstick/Tube Removal/Installation 7-175
Lubricating Oil Filter Assembly Removal/Installation 7-176
Lubricating Oil Pan Removal/Installation 7-178
Oil Pressure Sender Removal/Installation 7-183
Oil Pressure Gauge Removal/Installation 7-184
Lubricating Oil Pressure Regulator Removal/Installation 7-186
Oil Pressure Switch Removal/Installation 7-188
Lubricating Oil Pump Removal/Installation 7-189
Lubricating Oil Suction Tube Removal/Installation 7-199
Lubricating Oil and Filter Analysis 7-201
Check Oil Level 7-203
Drain and Fill Lubricating Oil 7-204

Section Contents (Cont)

Page

Speed

Speed Sensor or Mag Pick-Up Sensor Removal/Installation 7-207
Tachometer Removal/Installation 7-209
Overspeed Switch Removal/Installation..... 7-211
Tachometer Calibration..... 7-213

Overview

Coverage

This section of this manual addresses the Adjustment, Repair, and Replacement of Cummins NPower Fire Pump Engine components. Work this manual with the associated base engine troubleshooting and repair manual.

Base engine components are addressed in Cummins Manual No. 3666087, B3.9, B4.5, and B5.9 Series Engines Troubleshooting and Repair Manual.

Refer to Service Literature, Section 8, for additional information about this manual.

Requirements

Satisfy all code requirements or local regulations necessary to remove the fire pump from service. This may require contacting the local fire department or other authority.

Obtain the required tools and supplies for the intended service. If fluids are to be drained, get appropriate containers. Dispose of any waste fluids or removed components in accordance with applicable environmental requirements.

Ensure that the area is prepared for the intended service.

When work is completed, ensure that the fire pump is operational and correctly aligned for service. As required, notify the local fire department or other authority.

Maintenance must be performed by trained, experienced technicians. Refer to Service Assistance in Section 9 for qualified service assistance.

This Page Intentionally Left Blank

Belt Guard Removal/Installation

Prepare

WARNING

Coolant is toxic. Keep away from children and pets. If not reused, dispose of in accordance with local environmental regulations.

WARNING

Do not remove the pressure cap from a hot engine. Wait until the coolant temperature is below 50°C [122°F] before removing the pressure cap (Cummins Fire Power Part No.11407). Heated coolant spray or steam can cause personal injury.

Place the fire protection system in a safe mode for engine service.

Place the AUTO/MANUAL rocker switch in the MANUAL position.

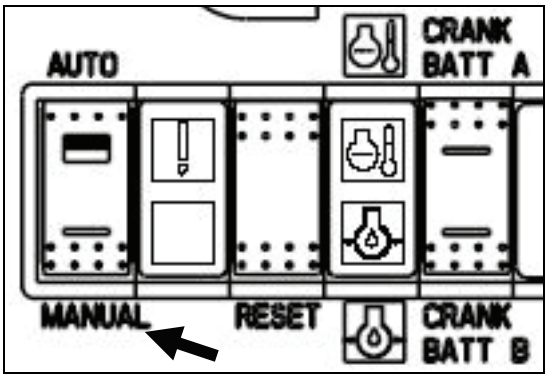

Disconnect or isolate the coolant heater power supply.

REMOVE BATTERY POWER BEFORE SERVICING ENGINE OR CONTROLS.

For safety reasons, both batteries must be disconnected before performing service on the Firepump Engine or on any of its controls. Before disconnecting the batteries, place the Firepump Controller in its appropriate service position in order to avoid a “Battery Failure” alarm.

Wear safety glasses when disconnecting batteries!

Next, disconnect both batteries at their terminals.

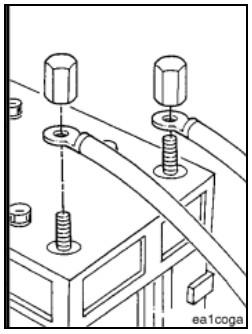

Belt Guard Removal/Installation (Cont)

Ensure that the engine and engine coolant is cool in order to avoid burns.

Remove the engine coolant pressure cap (Cummins Fire Power Part No.11407).

Open the Aftercooler Coolant Vent Valve.

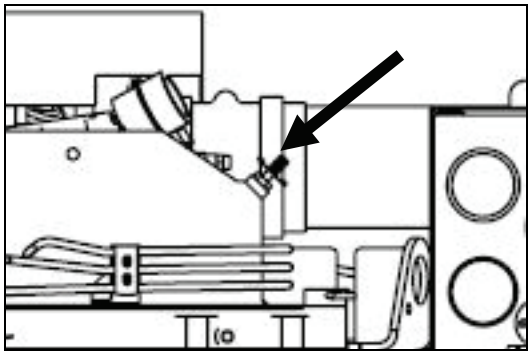

Drain the engine coolant system. Refer to Drain and Flush Coolant System in Section 5.

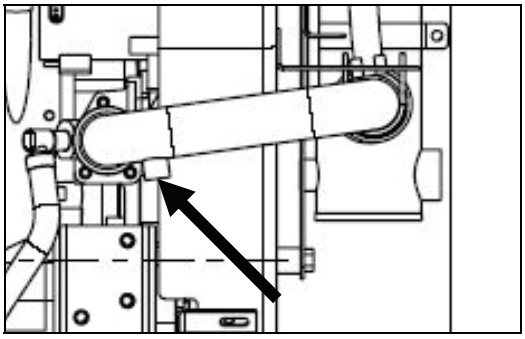

Remove the Upper Engine Coolant Hose from the heat exchanger.

Remove the Lower Engine Coolant and Fill Hose from the heat exchanger.

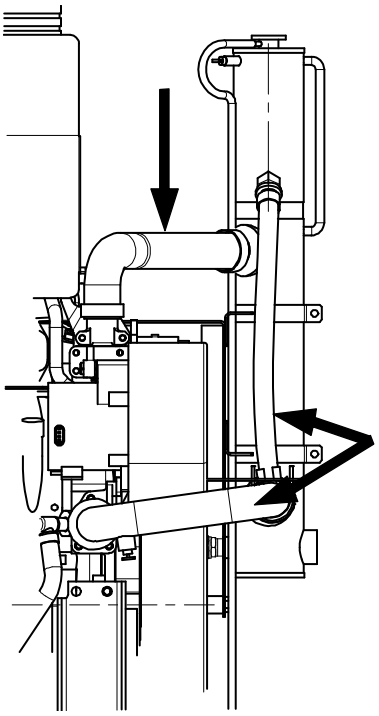

Belt Guard Removal/Installation (Cont)

Prepare

Place the AUTO/MANUAL Switch at the local panel in the MANUAL position.

Drain the coolant from the coolant heat exchanger. Refer to Drain and Flush Cooling System in Section 5.

Remove the Coolant Heat Exchanger's Coolant Outlet Hose and Vent Hose. Refer to Coolant Hose Removal / Installation in this section.

Remove

Remove the three bolts and the belt guard.

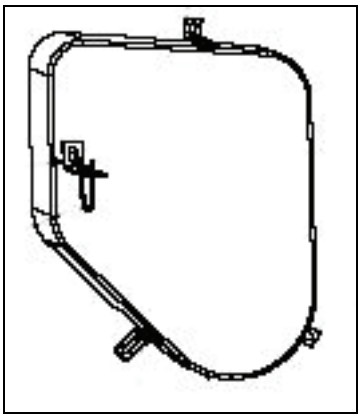

Install

NOTE: Install only Cummins approved replacement belt guard (Cummins Fire Power Part No. 8591) or equivalent.

When other work is completed, install the belt guard using the three bolts.

Torque as per Capscrew Markings and Torque Values in Section 10.

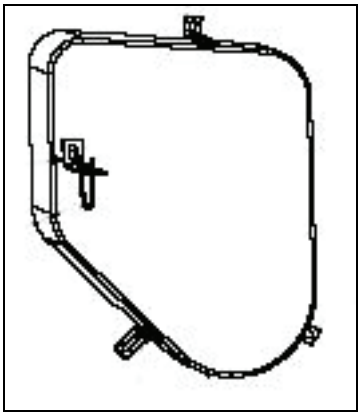

Belt Guard Removal/Installation (Cont)

Follow-Up

Install the Lower Engine Coolant and Fill Hose at the heat exchanger.

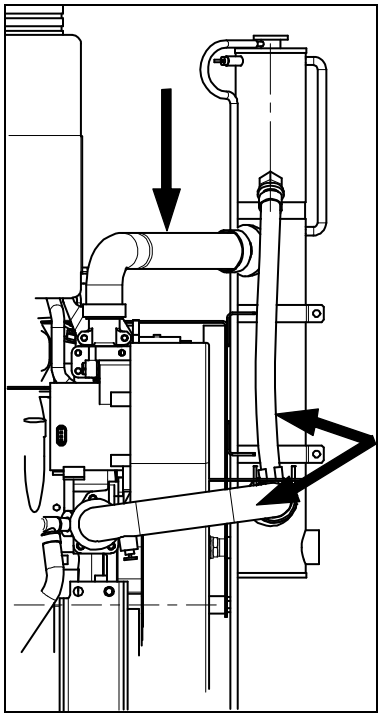

Close the Aftercooler Coolant Vent Valve.

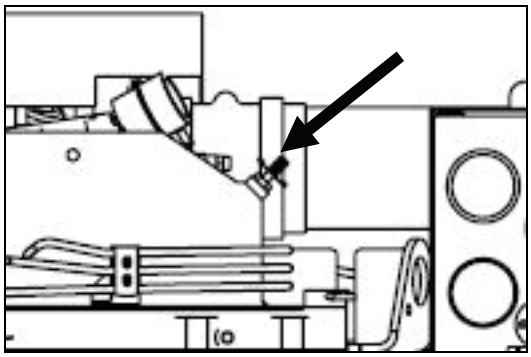

Close the coolant drain valve.

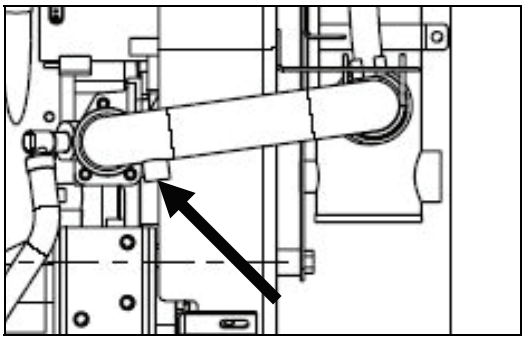

Belt Guard Removal/Installation (Cont)

Refill engine coolant as required Refer to Drain and Flush Coolant System in Section 5.

Install the coolant system pressure cap (Cummins Fire Power Part No.11407).

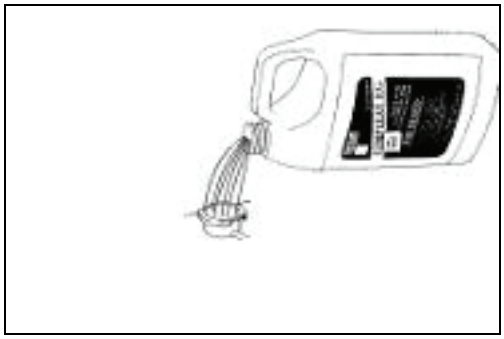

Reconnect the coolant heater power supply.

For safety reasons, both batteries must be re-connected before putting the engine and fire protection system controller back in service.

Wear safety glasses when reconnecting batteries!

Reconnect the batteries at their terminals after all service work has been completed.

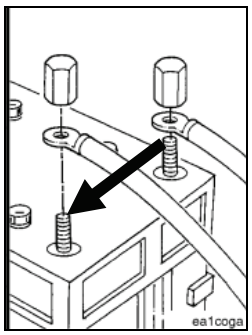

NOTE: Start the engine and do a quick check for leaks. If any coolant leaks are observed, stop the engine, repair the leak, check coolant level, then restart the engine.

Start the engine. Refer to Normal Local Starting Procedure in Section 3.

Check for and repair any coolant leaks.

Ensure that repairs are completed satisfactorily.

Stop the engine.

Place the AUTO/MANUAL rocker switch in the AUTO position.

Return the fire protection system to operating status.

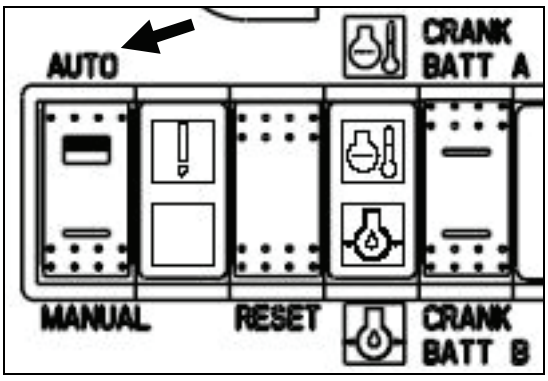

Belt Removal/Installation

Prepare

Do the preparatory steps and remove the Belt Guard. Refer to Belt Guard Removal / Installation in this section.

Remove

NOTE: The belt tensioner is spring-loaded and must be pivoted away from the drive belt. Pivoting in the wrong direction can result in damage to the belt tensioner.

Lift belt tensioner to relieve tension in the belt, and remove the belt.

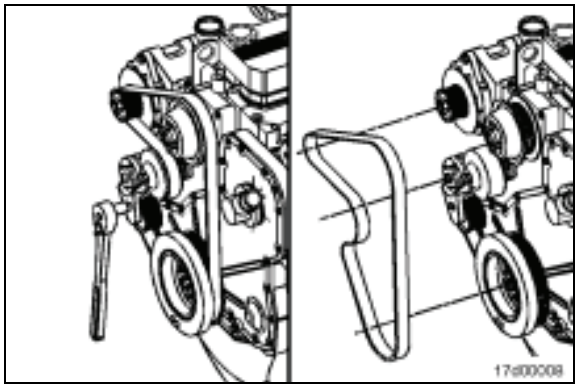

Install

Service Tip: If difficulty is experienced installing the drive belt; for example, the belt seems too short; position the belt over the grooved pulleys first; then, while holding the tensioner up, slide the belt over the water pump pulley.

NOTE: The belt tensioner is spring-loaded and must be pivoted away from the drive belt. Pivoting in the wrong direction can result in damage to the belt tensioner.

NOTE: Install only Cummins approved replacement v-ribbed belts (Cummins Part No. 3288812) or equivalent.

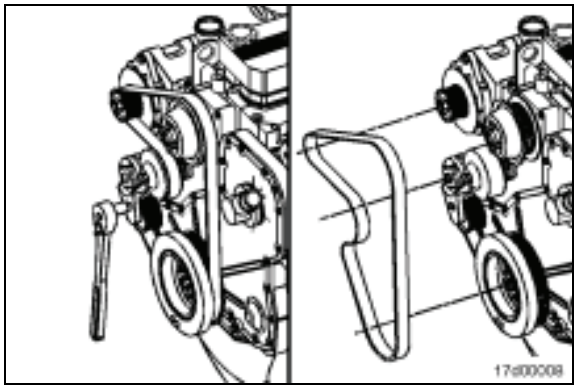

Lift belt tensioner to relieve tension in the belt, and install the belt.

Allow the belt tensioner to relax.

Ensure that the belt tensioner supplies tension to the belt without being at a mechanical limit stop.

Follow-Up

When work is completed, install the Belt Guard and do the listed follow up steps. Refer to Belt Guard Removal/Installation in this section.

Check that the drive belt operates without unusual noises.

Automatic Belt Tensioner Removal/Installation

Prepare

Do the preparatory steps and remove the Belt Guard. Refer to Belt Guard Removal/Installation in this section.

Remove the Drive Belt. Refer to Belt Removal/ Installation in this section.

Remove

Remove the capscrew and belt tensioner.

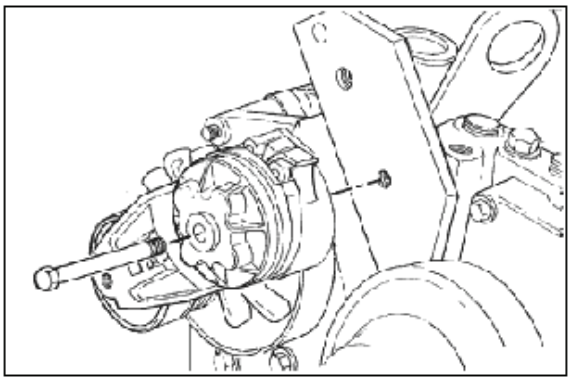

Install

Install the belt tensioner and tighten the capscrew.

Torque Value: 43 N•m [32 ft-lb]

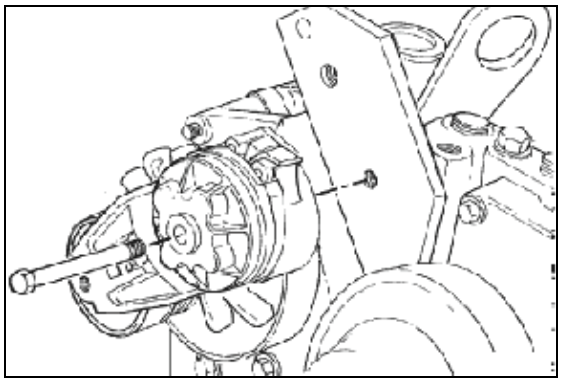

Follow-Up

When work is completed, install the Drive Belt. Refer to Belt Removal/Installation in this section.

When work is completed, install the Belt Guard and do the listed follow up steps. Refer to Belt Guard Removal/Installation in this section.

Check that the drive belt operates without unusual noises.

This Page Intentionally Left Blank

Coolant Heat Exchanger Removal/Installation

Prepare

WARNING

Coolant is toxic. Keep away from children and pets. If not reused, dispose of in accordance with local environmental regulations.

WARNING

Do not remove the pressure cap from a hot engine. Wait until the coolant temperature is below 50°C [122°F] before removing the pressure cap (Cummins Fire Power Part No.11407). Heated coolant spray or steam can cause personal injury.

Place the fire protection system in a safe mode for engine service.

Place the AUTO/MANUAL rocker switch in the MANUAL position.

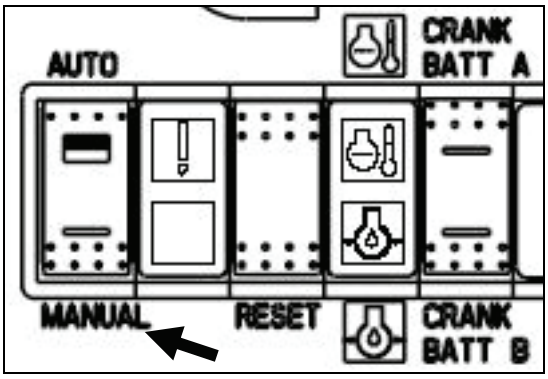

Disconnect or isolate the coolant heater power supply.

REMOVE BATTERY POWER BEFORE SERVICING ENGINE OR CONTROLS.

For safety reasons, both batteries must be disconnected before performing service on the Firepump Engine or on any of its controls. Before disconnecting the batteries, place the Firepump Controller in its appropriate service position in order to avoid a “Battery Failure” alarm.

Wear safety glasses when disconnecting batteries!

Next, disconnect both batteries at their terminals.

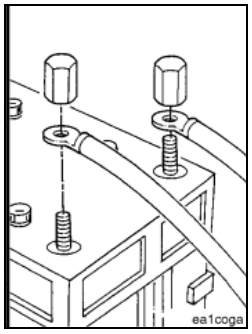

Coolant Heat Exchanger Removal/Installation (Cont)

Ensure that the engine and engine coolant is cool in order to avoid burns.

Remove the engine coolant pressure cap (Cummins Fire Power Part No.11407).

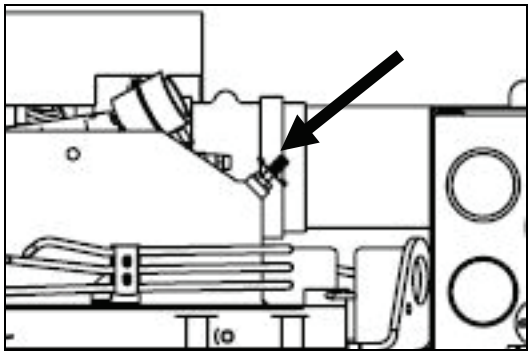

Drain the engine coolant system. Refer to Drain and Flush Coolant System in Section 5.

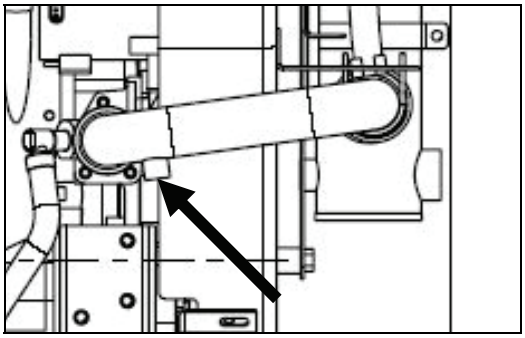

Remove the Upper Engine Coolant Hose from the heat exchanger.

Remove the Lower Engine Coolant and Fill Hose from the heat exchanger.

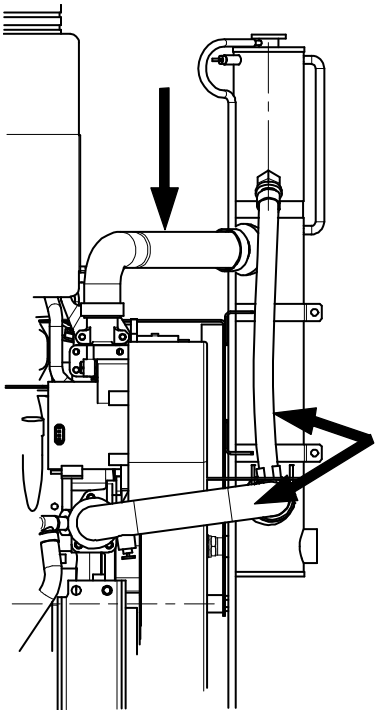

Coolant Heat Exchanger Removal/Installation (Cont)

Close the Raw Water Manifold Bypass Line Outlet Isolation Valve.

Close the Raw Water Manifold Normal Line Outlet Isolation Valve.

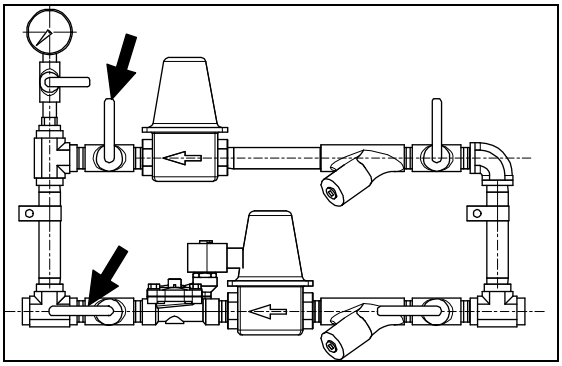

NOTE: If using piping supplied by Cummins Fire Power, refer to Drawing 9634 in Section 13 for raw water supply piping details.

Remove the ¾" NPT raw water inlet piping from the valve manifold to the heat exchanger.

Also, remove any customer-supplied raw water outlet fittings. Save these components for reuse.

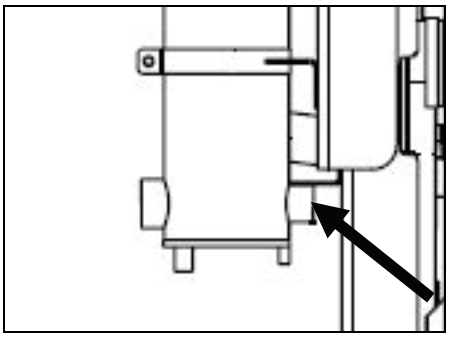

Pressure Test

NOTE: This test is required if internal leakage in the heat exchanger is suspected. It may be performed prior to the removal from the engine.

NOTE: Use teflon tape or other pipe sealant when installing the test setup in order to prevent leaks.

Install a 1" NPT pipe plug at the raw water outlet of the heat exchanger.

Install a pressure test setup with 700 kPa [100 psi] pressure gauge at the 3/4" NPT raw water inlet to the heat exchanger.

NOTE: There should be no detectable decrease in the pressure reading for the duration of the test.

Apply air pressure at 621 kPa [90 psig].

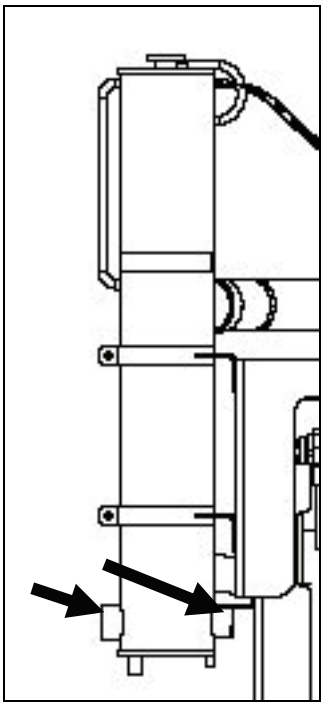

Coolant Heat Exchanger Removal/Installation (Cont)

Isolate the pressure source and monitor the pressure gauge for 5 minutes.

After testing, release the pressure.

Remove the pipe plug and the test setup.

If leakage is detected, the heat exchanger must be replaced.

Remove

Provide temporary support for the coolant heat exchanger in order to avoid dropping it.

Remove the four back sets of nuts, washers, and bolts at the heat exchanger mounting clamps.

Remove the heat exchanger and clamps from the engine.

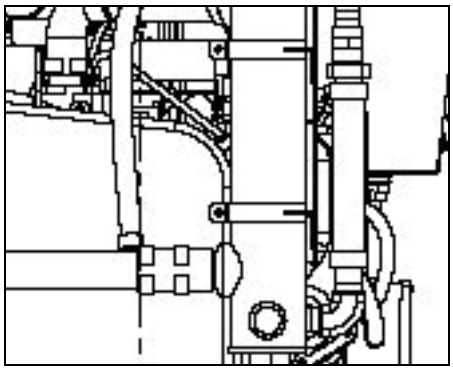

Disassemble

If required for replacement, remove the two front sets of nuts and bolts at the coolant heat exchanger clamps.

If required for replacement, remove the zinc plug and other pipe fittings from the heat exchanger.

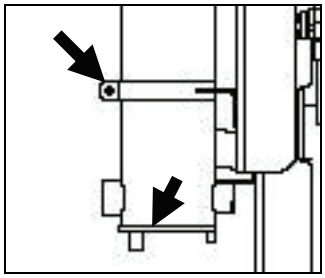

Assemble

NOTE: Use teflon or other pipe sealant when installing threaded pipe fittings.

If missing, install the zinc plug (Cummins Fire Power Part No. 9750) and brass fitting (Cummins Fire Power Part No. 9751) in the bottom of the heat exchanger.

Torque Values: As per capscrew markings and torque values in Section 10

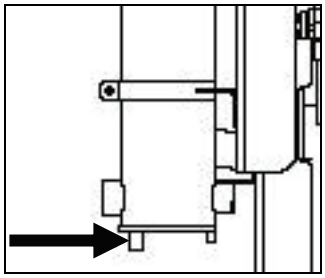

Coolant Heat Exchanger Removal/Installation (Cont)

If missing, install the pipe fittings removed from the original heat exchanger. Refer to Drawing 8650 in Section 13 for component information.

Torque Values: As per capscrew markings and torque values in Section 10

If removed, position the two clamps on the heat exchanger and install the two front sets of nuts and bolts at the coolant heat exchanger clamps. Do not tighten at this time. Refer to Drawing 8650 in Section 13 for component information.

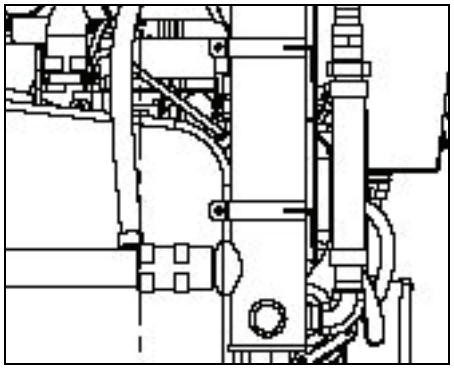

Install

Provide support for the coolant heat exchanger in order to avoid dropping it.

Position the heat exchanger and clamps on the engine's mounting bracket and start the four bolts.

Start the nut and washers on the four bolts.

Align the heat exchanger with the required hose connections and tighten the four back sets of clamp fasteners.

Tighten the two front sets of clamp fasteners.

Torque Values: As per capscrew markings and torque values in Section 10

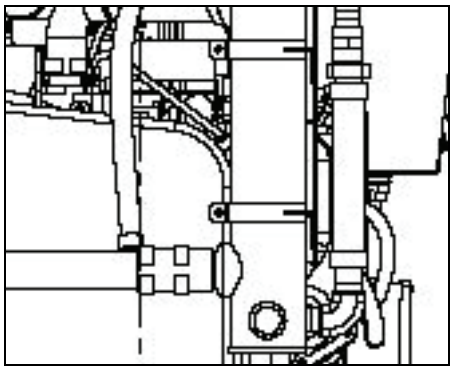

Coolant Heat Exchanger Removal/Installation (Cont)

Follow-Up

Install the Upper Engine Coolant Hose at the heat exchanger.

Install the Lower Engine Coolant and Fill Hose at the heat exchanger.

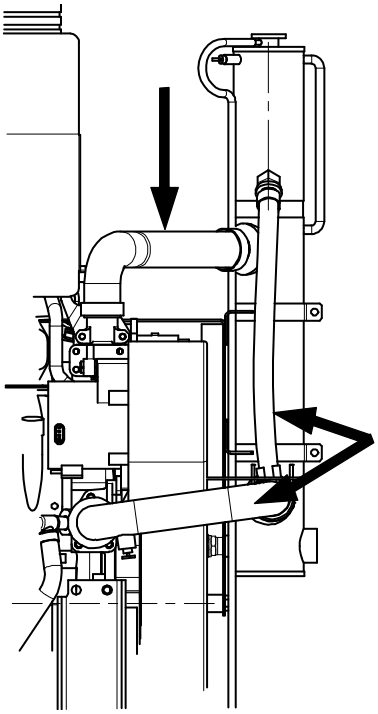

NOTE: If using piping supplied by Cummins Fire Power, refer to Drawing 9634 in Section 13 for raw water supply piping details.

Install the ¾" NPT raw water inlet piping from the valve manifold to the heat exchanger.

Also, install any customer-supplied raw water outlet fittings.

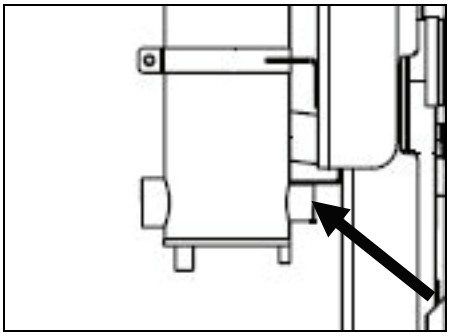

Close the Aftercooler Coolant Vent Valve.

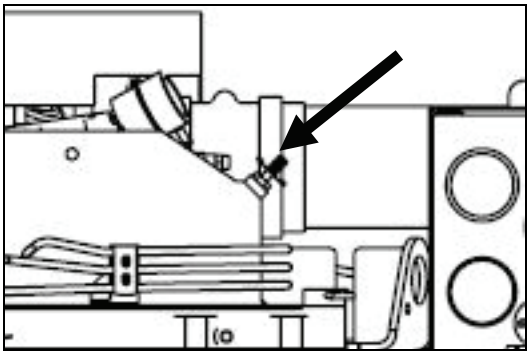

Coolant Heat Exchanger Removal/Installation (Cont)

Close the coolant drain valve.

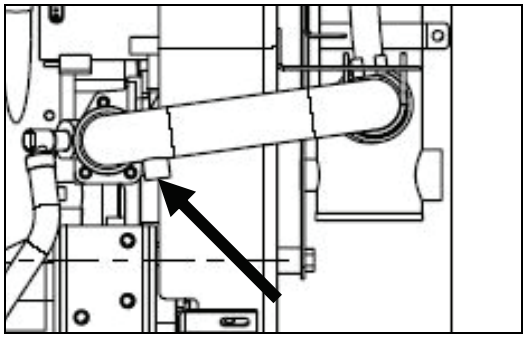

Refill engine coolant as required Refer to Drain and Flush Coolant System in Section 5.

Install the coolant system pressure cap (Cummins Fire Power Part No.11407).

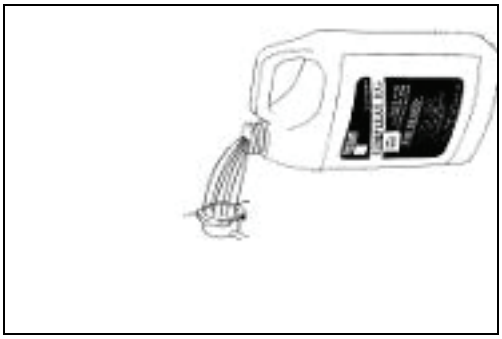

Reconnect the coolant heater power supply.

For safety reasons, both batteries must be re-connected before putting the engine and fire protection system controller back in service.

Wear safety glasses when reconnecting batteries!

Reconnect the batteries at their terminals after all service work has been completed.

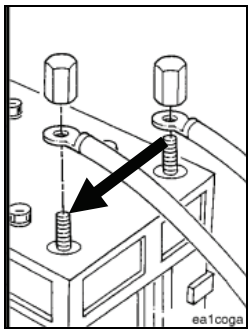

NOTE: Start the engine and do a quick check for leaks. If any coolant leaks are observed, stop the engine, repair the leak, check coolant level, then restart the engine. If no leaks are present, promptly establish raw water flow through the heat exchanger.

Start the engine. Refer to Normal Local Starting Procedure in Section 3.

Check for and repair any coolant leaks.

Coolant Heat Exchanger Removal/Installation (Cont)

CAUTION

When establishing raw water flow, ensure that the raw water pressure does not exceed 414 kPa (60 psig) at the heat exchanger. Adjust the pressure regulators as required.

Slowly open the Raw Water Manifold Bypass Line Outlet Isolation Valve.

Observe raw water flow through the heat exchanger.

Adjust the bypass pressure regulator if required.

Close the Raw Water Manifold Bypass Line Outlet Isolation Valve.

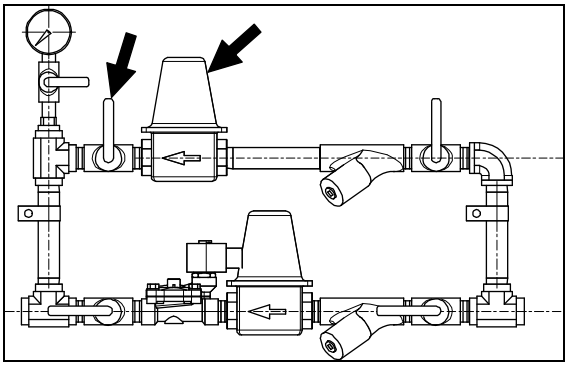

CAUTION

When establishing raw water flow, ensure that the raw water pressure does not exceed 414 kPa (60 psig) at the heat exchanger. Adjust the pressure regulators as required.

Slowly open the Raw Water Manifold Normal Line Outlet Isolation Valve.

Observe raw water flow through the heat exchanger.

Adjust the normal pressure regulator if required.

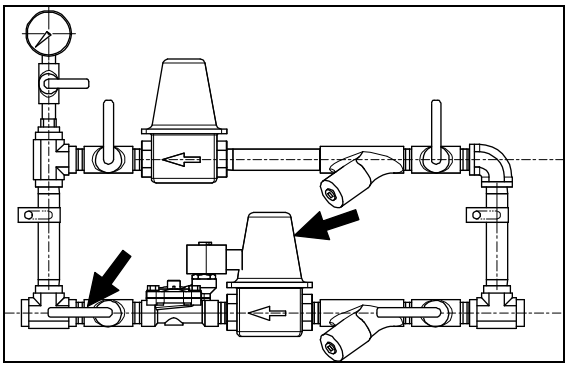

NOTE: If temperature does not stabilize, stop the engine and refer to Coolant Temperature Above Normal or Coolant Temperature Below Normal (Engine Running) in Troubleshooting Section 12.

Check that engine operating temperature stabilizes between about 82 and 93 °C [180 and 200 °F].

Check that no coolant hoses are collapsed.

When temperature has stabilized, stop the engine.

Ensure that repairs are completed satisfactorily.

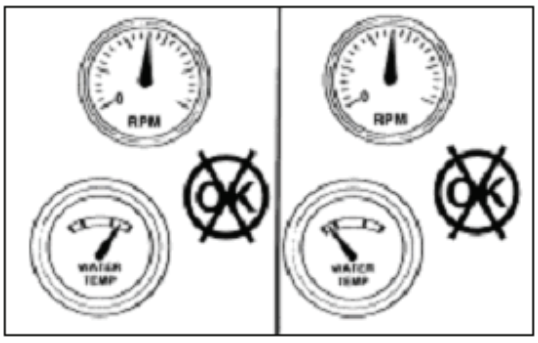

Coolant Heat Exchanger Removal/Installation (Cont)

WARNING

Do not remove the pressure cap from a hot engine. Wait until the coolant temperature is below 50°C [120°F] before removing the pressure cap (Cummins Fire Power Part No.11407). Heated coolant spray or steam can cause personal injury.

Check the coolant level. Refer to Check Coolant Level in Section 5. Add coolant if necessary.

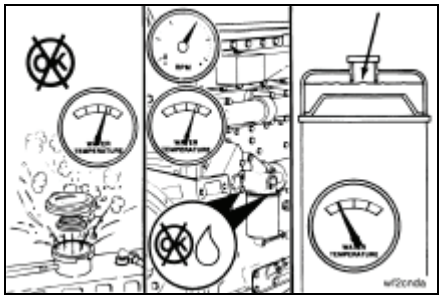

Place the AUTO/MANUAL rocker switch in the AUTO position.

Return the fire protection system to operating status.

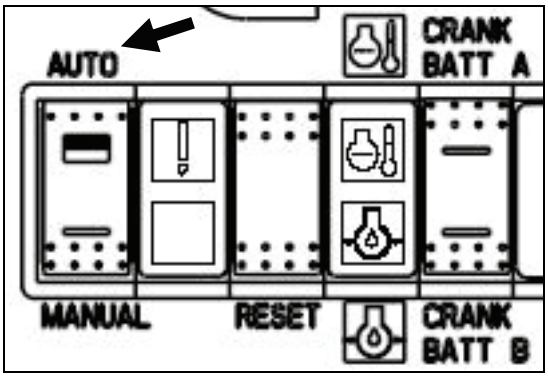

Coolant Heater Removal/Installation

Prepare

WARNING

Coolant is toxic. Keep away from children and pets. If not reused, dispose of in accordance with local environmental regulations.

WARNING

Do not remove the pressure cap from a hot engine. Wait until the coolant temperature is below 50°C [122°F] before removing the pressure cap (Cummins Fire Power Part No.11407). Heated coolant spray or steam can cause personal injury.

Place the fire protection system in a safe mode for engine service.

Place the AUTO/MANUAL rocker switch in the MANUAL position.

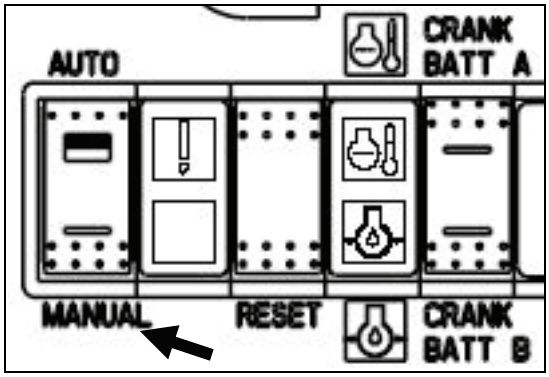

Disconnect or isolate the coolant heater power supply.

REMOVE BATTERY POWER BEFORE SERVICING ENGINE OR CONTROLS.

For safety reasons, both batteries must be disconnected before performing service on the Firepump Engine or on any of its controls. Before disconnecting the batteries, place the Firepump Controller in its appropriate service position in order to avoid a “Battery Failure” alarm.

Wear safety glasses when disconnecting batteries!

Next, disconnect both batteries at their terminals.

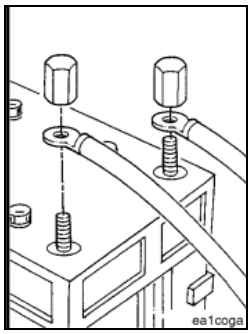

Coolant Heater Removal/Installation (Cont)

Ensure that the engine and engine coolant is cool in order to avoid burns.

Remove the engine coolant pressure cap (Cummins Fire Power Part No.11407).

Open the Aftercooler Coolant Vent Valve.

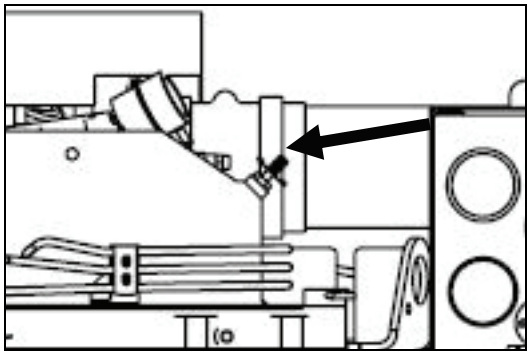

Drain the engine coolant system. Refer to Drain and Flush Coolant System in Section 5.

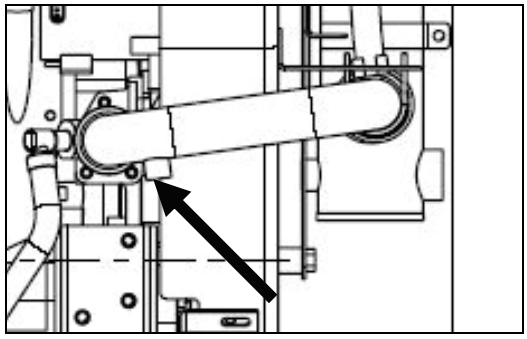

NOTE: Collect the remainder of the coolant in the heater hoses.

NOTE: Refer to Drawing 8556 in Section 13 for detailed component information.

Remove the Upper Coolant Heater Hose.

Remove the Lower Coolant Heater Hose.

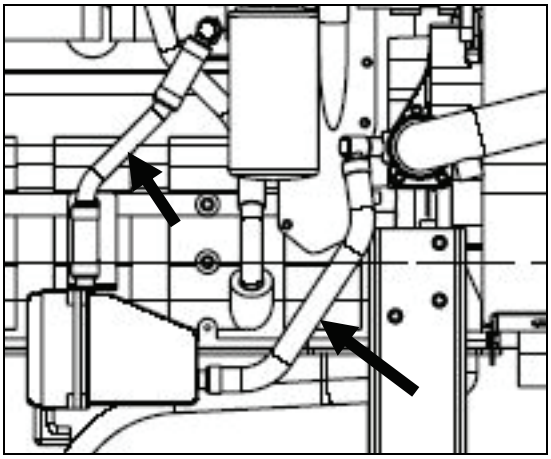

Coolant Heater Removal/Installation (Cont)

Remove

NOTE: Refer to Drawing 8556 in Section 13 for detailed component information.

Remove the two capscrews, washers, bracket, and coolant heater.

If required, remove the nuts, bolts, washers and mounting bracket from the coolant heater.

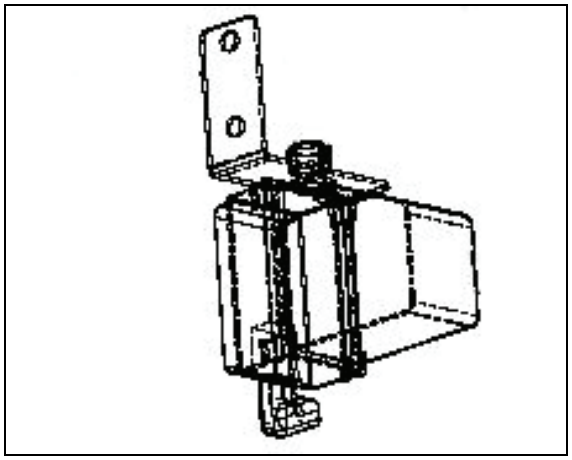

Install

NOTE: Refer to Drawing 8556 in Section 13 for detailed component information.

If missing, install the nuts, bolts, washers and mounting bracket on the coolant heater.

Position the coolant heater and mounting bracket and start the two bolts with washers.

Torque the two bolts on the mounting bracket as per Capscrew Markings and Torque Values in Section 10.

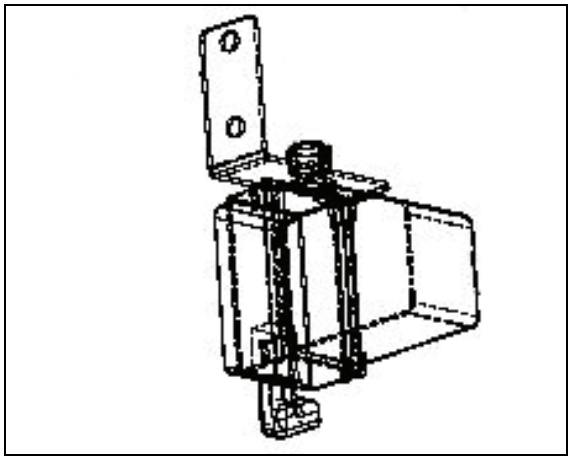

Follow-Up

NOTE: Refer to Drawing 8556 in Section 13 for detailed component information.

Install the Upper Coolant Heater Hose.

Install the Lower Coolant Heater Hose.

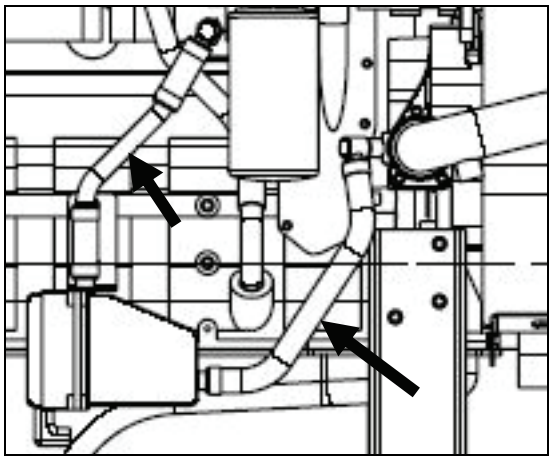

Coolant Heater Removal/Installation (Cont)

Close the Aftercooler Coolant Vent Valve.

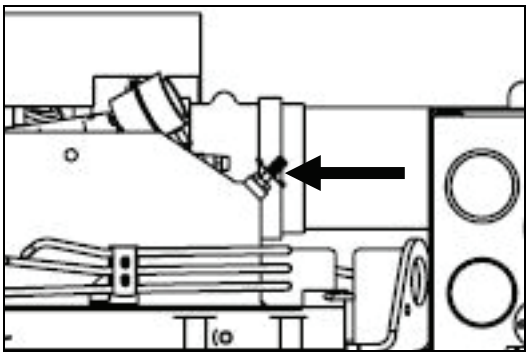

Close the coolant drain valve.

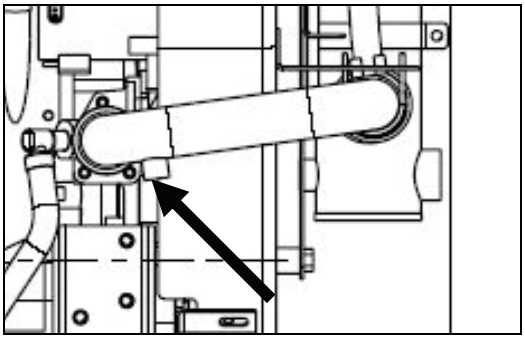

Refill engine coolant as required Refer to Drain and Flush Coolant System in Section 5.

Install the coolant system pressure cap (Cummins Fire Power Part No.11407).

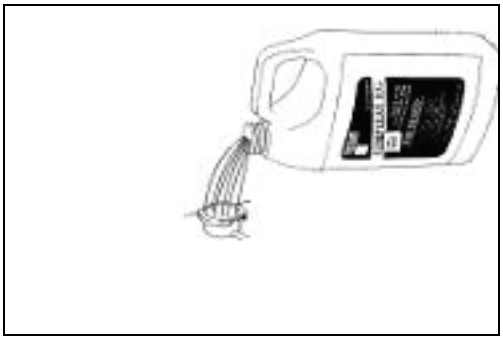

For safety reasons, both batteries must be re-connected before putting the engine and fire protection system controller back in service.

Wear safety glasses when reconnecting batteries!

Reconnect the batteries at their terminals after all service work has been completed.

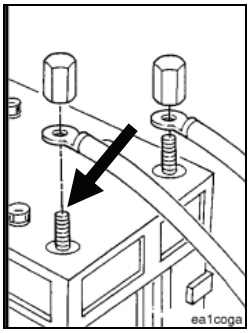

Coolant Heater Removal/Installation (Cont)

NOTE: Start the engine and do a quick check for leaks. If any coolant leaks are observed, stop the engine, repair the leak, check coolant level, then restart the engine.

Start the engine. Refer to Normal Local Starting Procedure in Section 3.

Check for and repair any coolant leaks.

Stop the engine.

WARNING

Do not remove the pressure cap from a hot engine. Wait until the coolant temperature is below 50°C [120°F] before removing the pressure cap, (Cummins Fire Power Part No.11407). Heated coolant spray or steam can cause personal injury.

Check the coolant level. Refer to Check Coolant Level in Section 4. Add coolant if necessary.

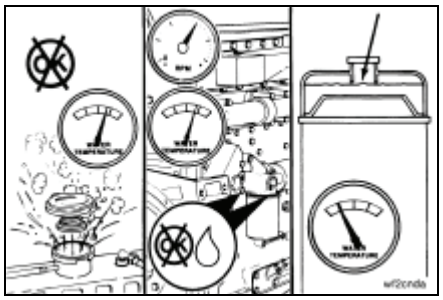

Reconnect the coolant heater power supply.

Observe that the coolant temperature cools down but stabilizes.

Check that the engine block remains warm to the touch.

Place the AUTO/MANUAL rocker switch in the AUTO position.

Return the fire protection system to operating status.

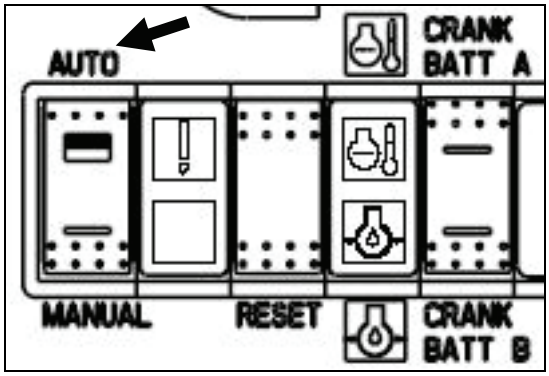

Coolant Hose Removal/Installation

Identify hose clamps and add manufacturer's torque value.

NOTE: This section addresses all coolant tubes and hoses. Only remove those coolant hoses that are necessary. It is not required to remove both ends of the hose for the replacement of other components.

Prepare

WARNING

Coolant is toxic. Keep away from children and pets. If not reused, dispose of in accordance with local environmental regulations.

WARNING

Do not remove the pressure cap from a hot engine. Wait until the coolant temperature is below 50°C [122°F] before removing the pressure cap (Cummins Fire Power Part No.11407). Heated coolant spray or steam can cause personal injury.

Place the fire protection system in a safe mode for engine service.

Place the AUTO/MANUAL rocker switch in the MANUAL position.

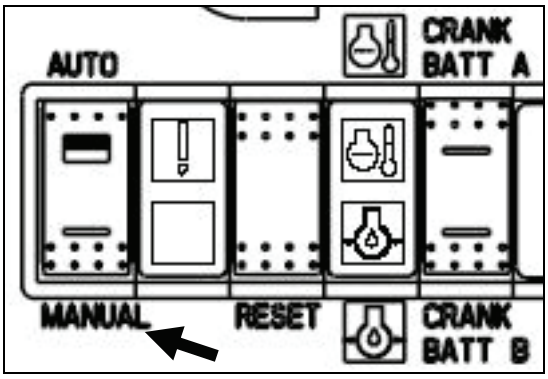

Disconnect or isolate the coolant heater power supply.

REMOVE BATTERY POWER BEFORE SERVICING ENGINE OR CONTROLS.

For safety reasons, both batteries must be disconnected before performing service on the Firepump Engine or on any of its controls. Before disconnecting the batteries, place the Firepump Controller in its appropriate service position in order to avoid a "Battery Failure" alarm.

Wear safety glasses when disconnecting batteries!

Next, disconnect both batteries at their terminals.

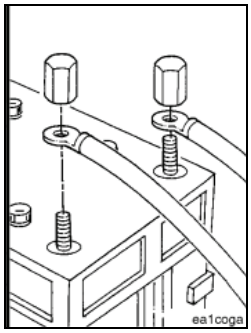

Coolant Hose Removal/Installation (Cont)

Ensure that the engine and engine coolant is cool in order to avoid burns.

Remove the engine coolant pressure cap (Cummins Fire Power Part No.11407).

Open the Aftercooler Coolant Vent Valve.

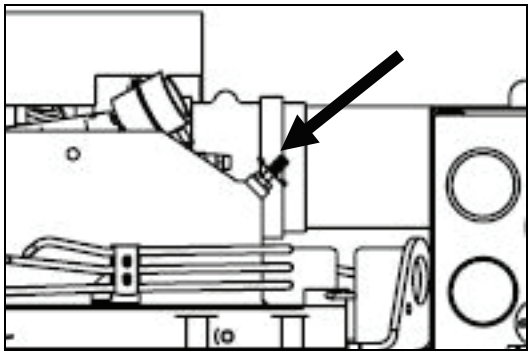

Drain the engine coolant system. Refer to Drain and Flush Coolant System in Section 5.

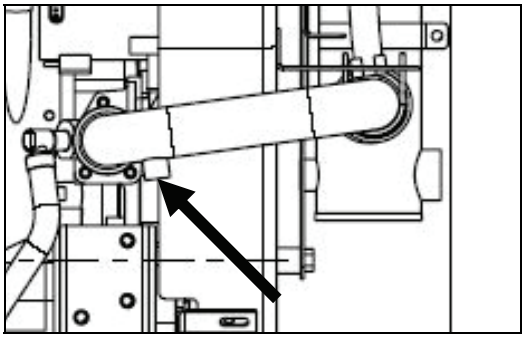

Remove the Upper Engine Coolant Hose

NOTE: Refer to Assembly Drawing 8650 in Section 13 for detailed construction.

Loosen the hose clamp at the heat exchanger.

Loosen the hose clamp at the engine.

Pull the hose from the heat exchanger and engine.

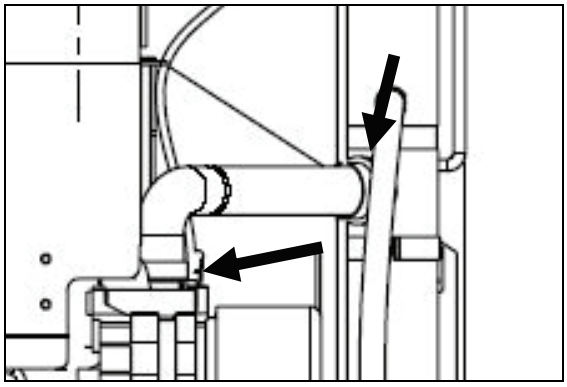

Coolant Hose Removal/Installation (Cont)

Remove the Lower Engine Coolant and Fill Hose

NOTE: Refer to Assembly Drawing 8650 in Section 13 for detailed construction.

Remove the nuts and U-bolt supporting the lower hose.

Loosen the fill hose clamp at the heat exchanger.

Loosen the lower hose clamp at the heat exchanger.

Loosen the lower hose clamp at the engine.

Pull the hoses from the heat exchanger and engine.

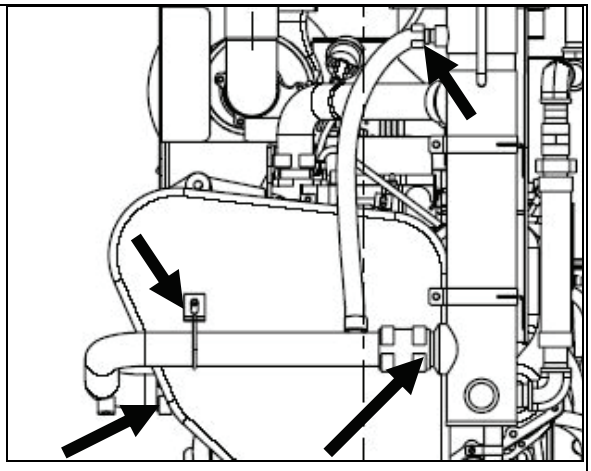

Remove the Upper Coolant Heater Hose

NOTE: Refer to Assembly Drawing 8556 in Section 13 for detailed construction.

NOTE: Be prepared to collect the residual coolant in the hose.

Loosen the hose clamp at the coolant heater.

Loosen the hose clamp at the engine.

Pull the hose from the heat exchanger and engine.

Disassemble additional components if this is required for inspection or repairs.

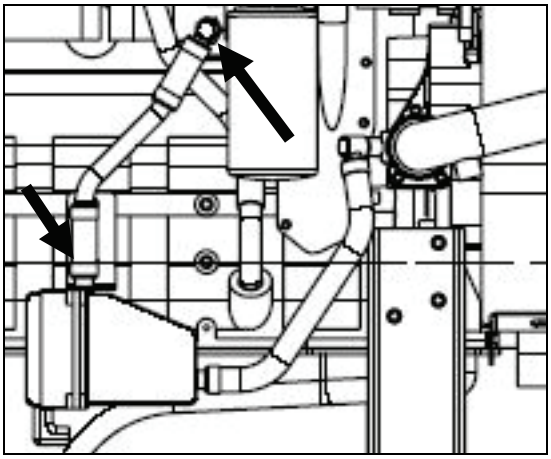

Remove the Lower Coolant Heater Hose

NOTE: Refer to Assembly Drawing 8556 in Section 13 for detailed construction.

NOTE: Be prepared to collect the residual coolant in the hose.

Loosen the hose clamp at the coolant heater.

Loosen the hose clamp at the engine.

Pull the hose from the heat exchanger and engine.

Disassemble additional components if this is required for inspection or repairs.

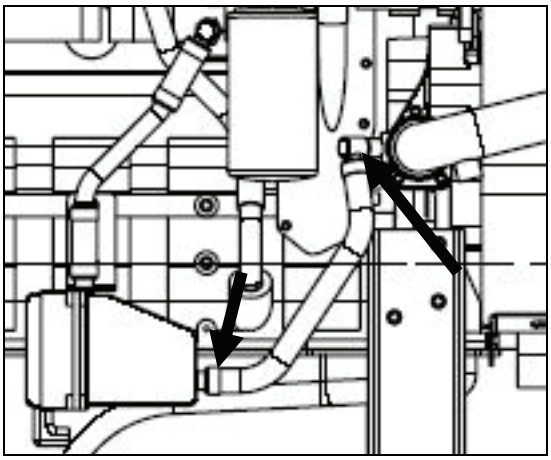

Coolant Hose Removal/Installation (Cont)

Inspect

NOTE: Inspect the cooling system hoses and hose connection for leaks or deterioration. Particles of deteriorated hose can be carried through the cooling system and slow or partially stop circulation.

Inspect the hoses and hose connections.

Replace any hoses or clamps that are damaged.

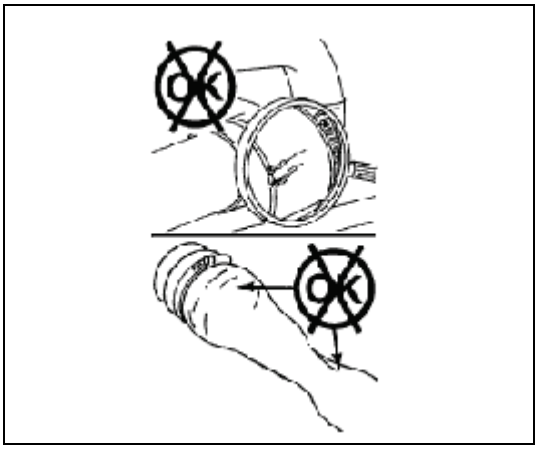

Install the Upper Engine Coolant Hose

CAUTION

Do not re-install worn or damaged hoses or corroded clamps.

NOTE: Refer to Assembly Drawing 8650 in Section 13 for detailed construction.

Position the hose clamps on the hose.

Push the hose onto the heat exchanger and engine.

Tighten the hose clamp at the heat exchanger.

Tighten the hose clamp at the engine.

Torque Value: As per capscrew markings and torque values in Section 10

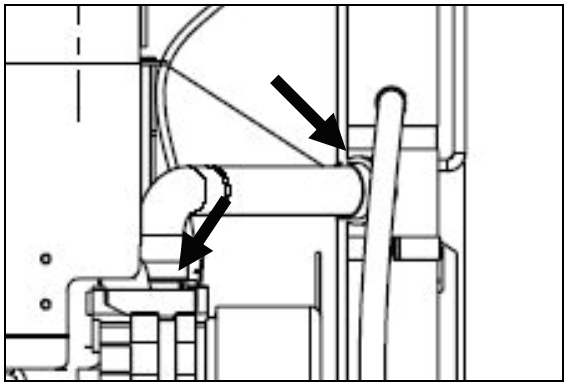

Coolant Hose Removal/Installation (Cont)

Install the Lower Engine Coolant and Fill Hoses

CAUTION

Do not re-install worn or damaged hoses or corroded clamps.

NOTE: Refer to Assembly Drawing 8650 in Section 13 for detailed construction.

Position the hose clamps on the hose.

Position the hoses at the heat exchanger and engine.

Position and tighten the lower engine coolant hose clamp at the engine.

Position and tighten the lower engine coolant hose clamp at the heat exchanger.

Position and tighten the upper fill hose clamp at the heat exchanger.

Torque Value: As per capscrew markings and torque values in Section 10

Install the nuts and U-bolt supporting the lower hose. Tighten as per Capscrew Markings and Torque Values in Section 13.

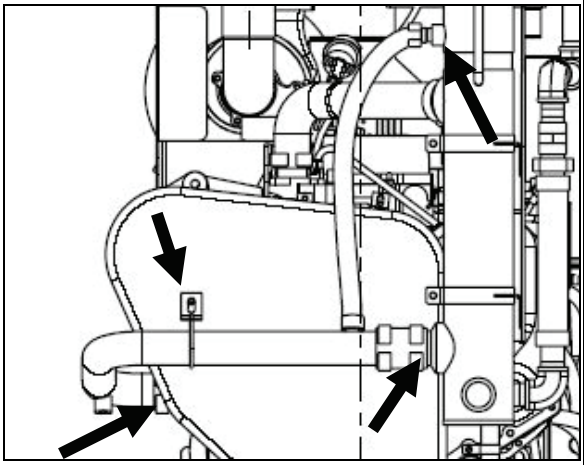

Coolant Hose Removal/Installation (Cont)

Install the Upper Coolant Heater Hose

CAUTION

Do not re-install worn or damaged hoses or corroded clamps.

NOTE: Refer to Assembly Drawing 8556 in Section 13 for detailed construction.

Position the hose clamps on the hose.

Position the hose on the fittings at the heater and at the engine.

Position and tighten the hose clamps.

Torque Value: As per capscrew markings and torque values in Section 10

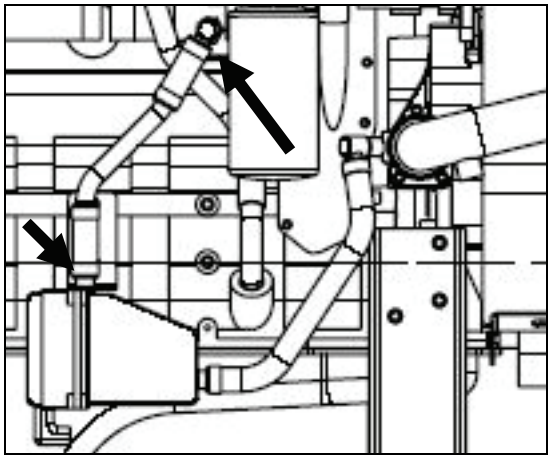

Install the Lower Coolant Heater Hose

CAUTION

Do not re-install worn or damaged hoses or corroded clamps.

NOTE: Refer to Assembly Drawing 8556 in Section 13 for detailed construction.

Position the hose clamps on the hose.

Position the hose on the fittings at the heater and at the water inlet connection.

Position and tighten the hose clamps.

Torque Value: As per capscrew markings and torque values in Section 10

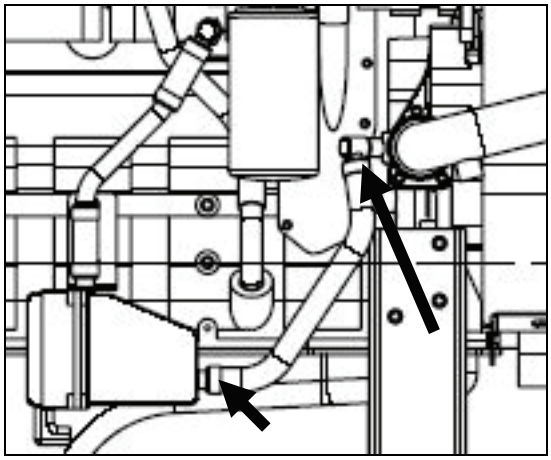

Coolant Hose Removal/Installation (Cont)

Follow-Up

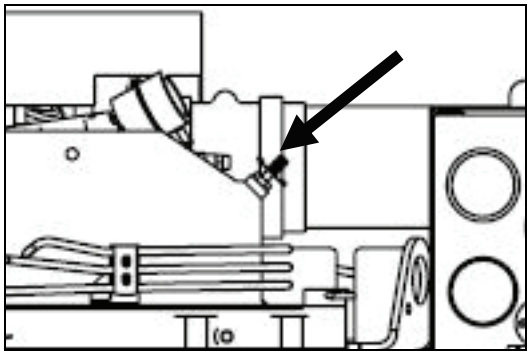

Close the coolant drain valve.

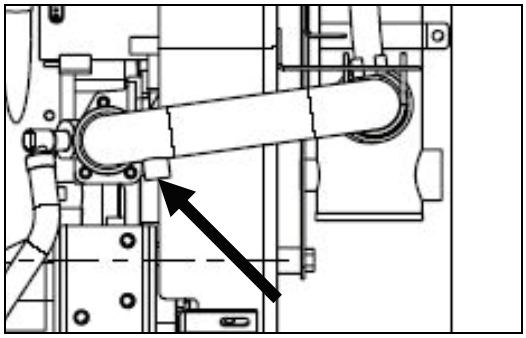

Refill engine coolant as required Refer to Drain and Flush Coolant System in Section 5.

Install the coolant system pressure cap (Cummins Fire Power Part No.11407).

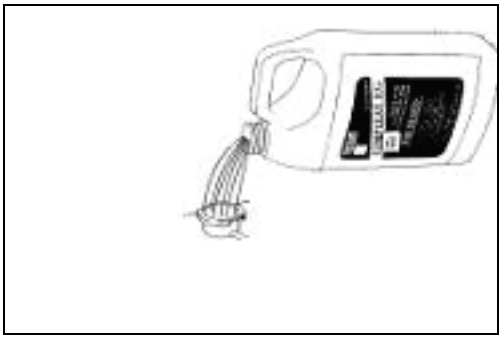

Reconnect the coolant heater power supply.

For safety reasons, both batteries must be re-connected before putting the engine and fire protection system controller back in service.

Wear safety glasses when reconnecting batteries!

Reconnect the batteries at their terminals after all service work has been completed.

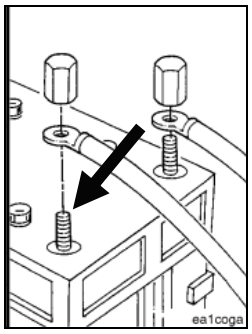

Coolant Hose Removal/Installation (Cont)

NOTE: Start the engine and do a quick check for leaks. If any coolant leaks are observed, stop the engine, repair the leak, check coolant level, then restart the engine.

Start the engine. Refer to Normal Local Starting Procedure in Section 3.

Check for and repair any coolant leaks.

Check that engine operating temperature stabilizes between about 82 and 93 °C [180 and 200 °F].

Check that no coolant hoses are collapsed.

When temperature has stabilized, stop the engine.

Ensure that repairs are completed satisfactorily.

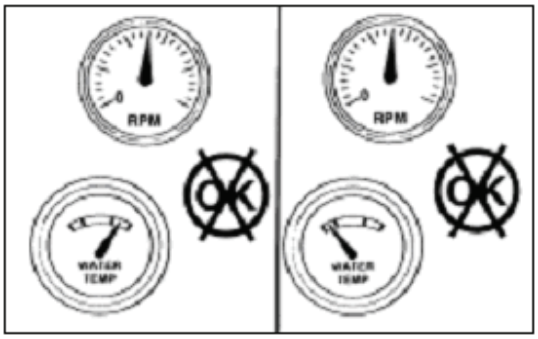

WARNING

Do not remove the pressure cap from a hot engine. Wait until the coolant temperature is below 50°C [120°F] before removing the pressure cap (Cummins Fire Power Part No.11407). Heated coolant spray or steam can cause personal injury.

Check the coolant level. Refer to Check Coolant Level in Section 5. Add coolant if necessary.

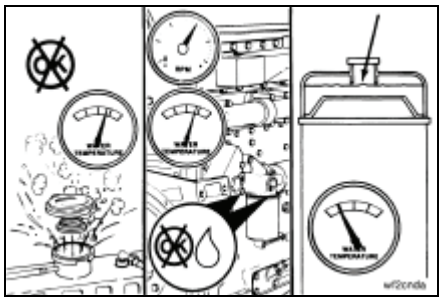

Place the AUTO/MANUAL rocker switch in the AUTO position.

Return the fire protection system to operating status.

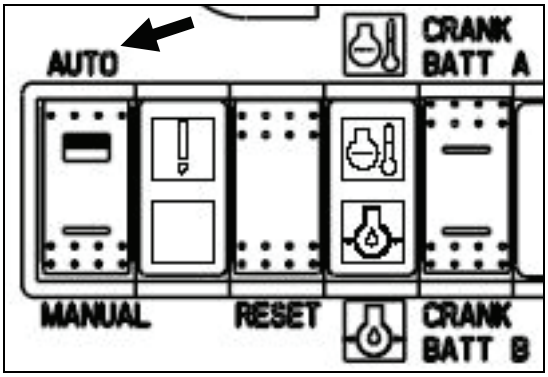

Raw Water Pressure Regulator Removal/Installation

NOTE: This section applies only to pressure regulators supplied by Cummins Fire Power. These procedures should be modified for alternative piping or components as supplied by the customer.

NOTE: This section applies to both the normal and bypass lines.

Prepare (Bypass Line)

Place the AUTO/MANUAL Switch at the local panel in the MANUAL position.

Close the Raw Water Manifold Bypass Line Inlet Isolation Valve.

Close the Raw Water Manifold Bypass Line Outlet Isolation Valve.

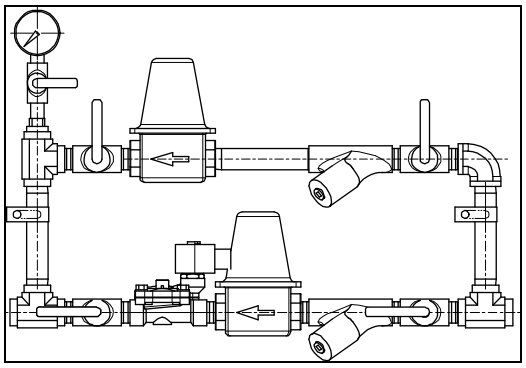

Prepare (Normal Line)

Place the AUTO/MANUAL Switch at the local panel in the MANUAL position.

Close the Raw Water Manifold Normal Line Inlet Isolation Valve.

Close the Raw Water Manifold Normal Line Outlet Isolation Valve.

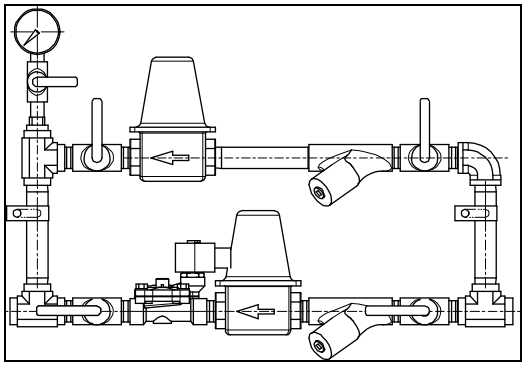

Raw Water Pressure Regulator Removal/Installation (Cont)

Remove (Bypass Line)

Loosen the pipe union upstream of the pressure regulator.

Unscrew the pressure regulator from the outlet isolation valve.

As required, remove the pipe nipples from the pressure regulator.

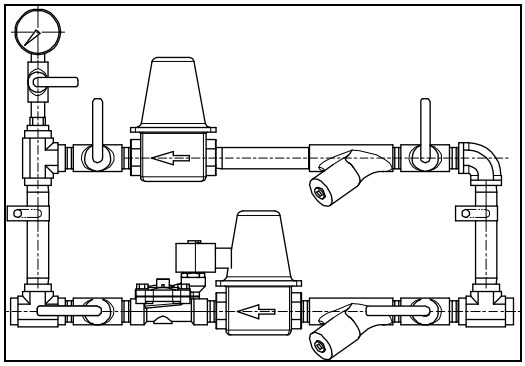

Remove (Normal Line)

Loosen the pipe union downstream of the pressure regulator.

Unscrew the pressure regulator from the solenoid valve.

As required, remove the pipe nipples from the pressure regulator.

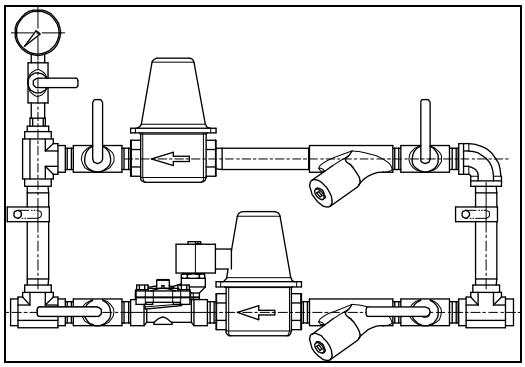

Install (Bypass Line)

When the pressure regulator is repaired or replaced, prepare it for installation.

NOTE: Use pipe dope or silicon sealant on threaded fittings.

As required, install the pipe nipples on the pressure regulator. Tighten with a pipe wrench or equivalent.

Screw the pressure regulator onto the outlet isolation valve.

Align and connect the pipe union. Tighten with a pipe wrench or equivalent.

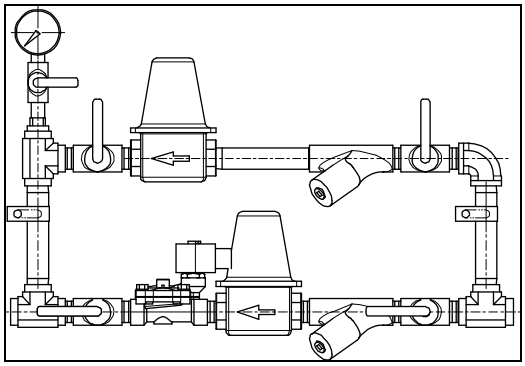

Raw Water Pressure Regulator Removal/Installation (Cont)

Install (Normal Line)

When the pressure regulator is repaired or replaced, prepare it for installation.

NOTE: Use pipe dope or silicon sealant on threaded fittings.

As required, install the pipe nipples on the pressure regulator. Tighten with a pipe wrench or equivalent.

Screw the pressure regulator onto the solenoid valve.

Align and connect the pipe union. Tighten with a pipe wrench or equivalent.

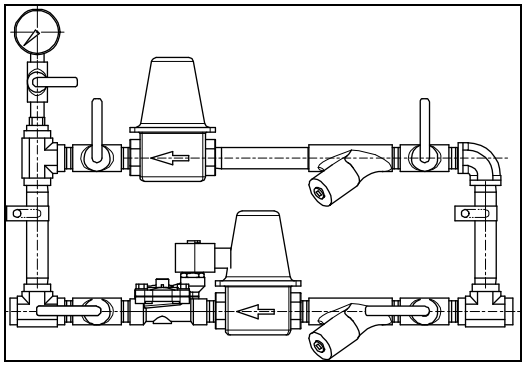

Follow-Up (Bypass Line)

Check the pressure regulator setpoint (refer to instructions in Section 3).

If required, open the Raw Water Manifold Bypass Line Inlet Isolation Valve.

If required, open the Raw Water Manifold Bypass Line Outlet Isolation Valve.

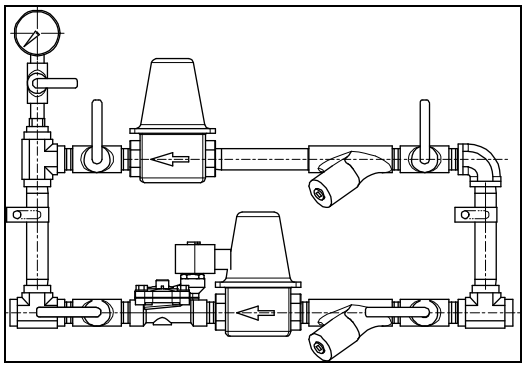

Verify that raw water flow is established through the heat exchanger.

When flow is verified, close the bypass line outlet valve.

Ensure that the normal line inlet and outlet valves are both open.

Ensure that the pressure gauge isolation valve is open.

Ensure that repairs are completed satisfactorily.

Place the AUTO/MANUAL Switch at the local panel in the AUTO position.

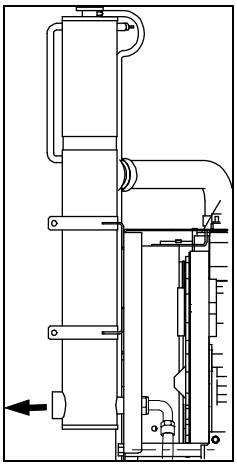

Raw Water Pressure Regulator Removal/Installation (Cont)

Follow-Up (Normal Line)

Check the pressure regulator setpoint (refer to instructions in Section 3).

If required, open the Raw Water Manifold Normal Line Inlet Isolation Valve.

If required, open the Raw Water Manifold Normal Line Outlet Isolation Valve.

As required, close the bypass line outlet valve.

Ensure that the pressure gauge isolation valve is open.

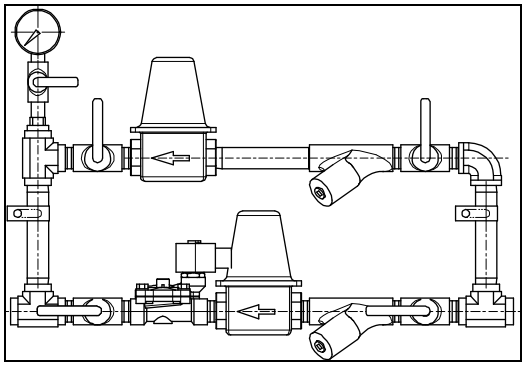

Start the engine to operate the raw water solenoid valve. (Refer to instructions in Section 3.)

Verify that raw water flow is established through the heat exchanger.

When flow is verified, stop the engine.

Observe that raw water flow stops.

Ensure that repairs are completed satisfactorily.

Place the AUTO/MANUAL Switch at the local panel in the AUTO position.

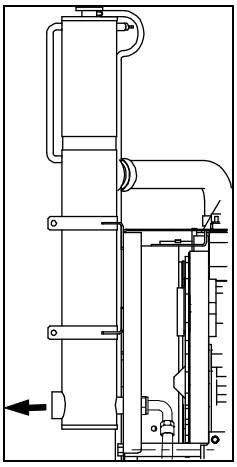

Raw Water Solenoid Valve Removal/Installation

NOTE: This section applies to solenoid valves supplied by Cummins Fire Power.

Prepare

Place the AUTO/MANUAL Switch at the local panel in the MANUAL position.

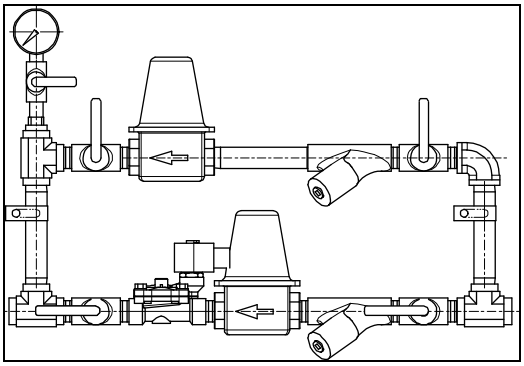

WARNING

Batteries can emit explosive gases. To reduce the possibility of personal injury, always ventilate the compartment before servicing the batteries. To reduce the possibility of arcing, remove the negative (-) battery cable first and attach the negative (-) battery cable last.

Disconnect the positive battery cables from both batteries.

Disconnect any customer supplied battery chargers.

Close the Raw Water Manifold Normal Line Inlet Isolation Valve.

Close the Raw Water Manifold Normal Line Outlet Isolation Valve.

Remove

NOTE: Minimize the loss of wire when cutting the splices.

NOTE: Tag each end of the wire before making the cut.



Cut the butt-splices at the connection between the two solenoid valve pigtail wires and the fire pump electrical harness.

Loosen the union fitting between the solenoid valve and the pressure regulator.

Unscrew the solenoid valve from the outlet isolation valve or inlet nipple.

Remove the solenoid valve.

If appropriate for replacement, remove the pipe fittings from the solenoid valve.

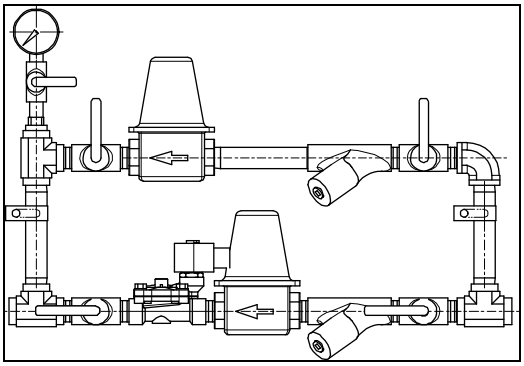

Raw Water Solenoid Valve Removal/Installation (Cont)

Install

NOTE: Install only Cummins approved replacement solenoid valves [Cummins Fire Power Part No. 8210G003-12VDC (12 VDC) or 8210G3-24VDC (24 VDC)].

NOTE: Use thread sealant when making threaded plumbing connections.

If removed, install the inlet and outlet fittings on the solenoid valve.

Position the solenoid valve and start threading it into the outlet valve or onto the outlet valve nipple.

Thread the valve until it is tight and so that the electrical housing is facing up.

Align and tighten the union connection.

NOTE: Use termination techniques that meet all local requirements. Cummins recommends crimped and insulated butt splices.

NOTE: The solenoid valve's green pigtail lead is not used. The other two leads are not polarity dependent.

Splice the two solenoid pigtail leads to the fire pump harness solenoid leads.

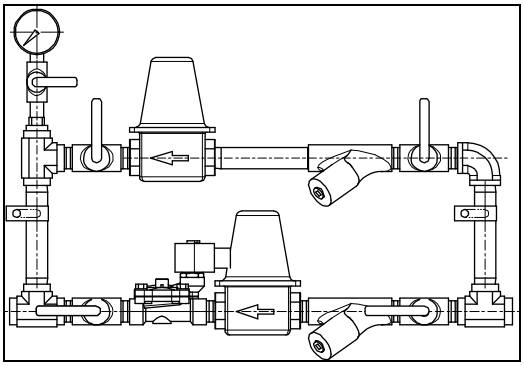

Raw Water Solenoid Valve Removal/Installation (Cont)

Follow-Up

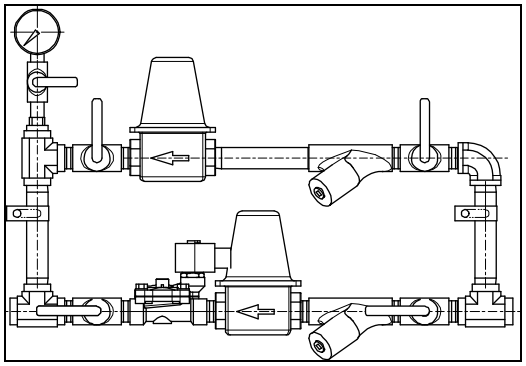

WARNING

Batteries can emit explosive gases. To reduce the possibility of personal injury, always ventilate the compartment before servicing the batteries. To reduce the possibility of arcing, remove the negative (-) battery cable first and attach the negative (-) battery cable last.

Connect the positive battery cables at both batteries.

Open the Raw Water Manifold Normal Line Inlet Isolation Valve.

Open the Raw Water Manifold Normal Line Outlet Isolation Valve.

Place the AUTO/MANUAL Switch at the local panel in the MANUAL position.

Operate the engine. Refer to Operating Instructions in Section 3.

Check for leaks. Repair any leaks.

Check that raw water flow starts when the engine starts.

Stop the engine.

Check that raw water flow stops shortly after the engine stops.

If raw water flow does not start when the engine starts, refer to Coolant Temperature Above Normal in Troubleshooting Section 12.

If raw water flow does not stop shortly after the engine stops, refer to Troubleshooting, Section 12.

Water Temperature Gauge Removal/Installation

Prepare

Place the AUTO/MANUAL Switch at the local panel in the MANUAL position.

WARNING

Batteries can emit explosive gases. To reduce the possibility of personal injury, always ventilate the compartment before servicing the batteries. To reduce the possibility of arcing, remove the negative (-) battery cable first and attach the negative (-) battery cable last.

Disconnect the positive battery cables from both batteries.

Disconnect any customer supplied battery chargers.

Remove



Use a nut driver or equivalent to remove the control panel's mounting bolt.

Pull the control panel out from the enclosure so that it is supported by the piano hinge on the bottom.

NOTE: Check and tag all wires with location tags prior to removal.

Remove the two dark blue [METER +] wires from the [I] terminal on the gauge.

Remove the single black ground wire from the [G] terminal on the gauge.

Remove the single [WTG] wire from the [S] terminal on the gauge.

NOTE: Catch the gauge as the meter bracket is removed.

Remove the two nuts and the meter bracket from the back of the panel.

Remove the gauge from the panel.

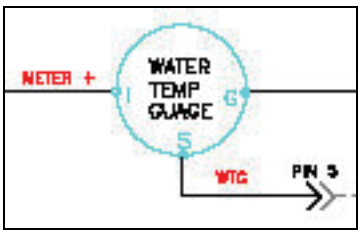

Water Temperature Gauge Removal/Installation (Cont)

Install

Position the gauge in the panel. Orient it for ease of reading.

Position the meter bracket on the gauge's mounting studs. Start the nuts.

Tighten the nuts hand tight plus a full turn.

Connect the two dark blue [METER +] wires on the [I] terminal on the gauge.

Connect the single black ground wire on the [G] terminal on the gauge.

Connect the single [WTG] wire on the [S] terminal on the gauge.

Raise the control panel and install the panel mounting bolt.



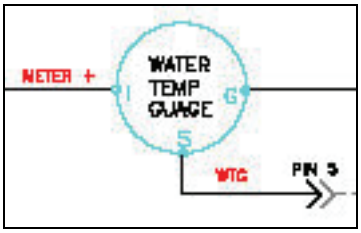

Follow-Up

Reconnect the batteries and any battery chargers.

Observe that the [WATER TEMP] gauge indicates a reasonable value for cooling water temperature.

If the gauge does not indicate correctly, refer to instructions in Troubleshooting, Section 12.

If the gauge does indicate correctly, place the AUTO/MANUAL Switch at the local panel in the MANUAL position.

Coolant Temperature Sender Removal/Installation

Prepare

WARNING

Coolant is toxic. Keep away from pets and children. If not reused, dispose of in accordance with local environmental regulations.

WARNING

Do not remove the pressure cap from a hot engine. Wait until the temperature is below 50°C [122°F] before removing the pressure cap (Cummins Fire Power Part No.11407). Heated coolant spray or steam can cause personal injury.

Drain the coolant. Refer to Drain and Flush Cooling System in Section 5.

Remove

Disconnect the temperature sensor wiring.

Remove the temperature sensor.

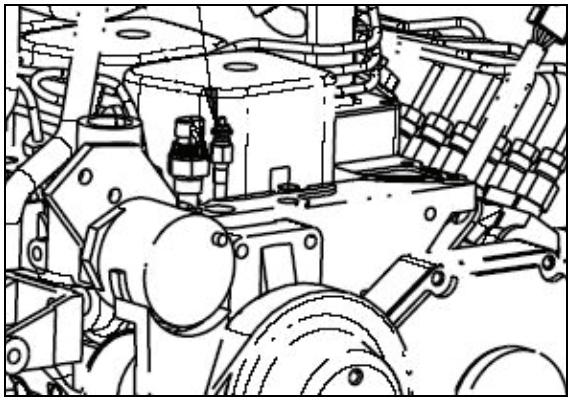

Install

NOTE: Apply liquid teflon sealant to the threads when installing the temperature sensor.

Install the temperature sensor.

Torque Value:

(Cast Iron) 50 N•m [37 ft-lb]

(Aluminum) 30 N•m [22 ft-lb]

Reconnect the wiring.

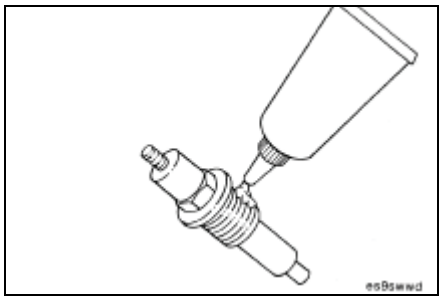

Coolant Temperature Sender Removal/Installation (Cont)

Follow-Up

Fill coolant to proper level. Refer to Drain and Flush Cooling System in Section 5.



Operate the engine. Refer to Operating Instructions in Section 3.

Check for leaks. Repair any leaks.

Check that engine operating temperature stabilizes between 83 and 91 ^{o}C [181 and 196 ^{o}F]. If temperature does not stabilize, stop the engine and refer to instructions in Troubleshooting, Section 12.

Coolant Temperature Switch Removal/Installation

Prepare

WARNING

Coolant is toxic. Keep away from pets and children. If not reused, dispose of in accordance with local environmental regulations.

WARNING

Do not remove the pressure cap from a hot engine. Wait until the temperature is below 50°C [122°F] before removing the pressure cap (Cummins Fire Power Part No.11407). Heated coolant spray or steam can cause personal injury.

Drain the coolant. Refer to Drain and Flush Cooling System in Section 5.

Remove

Disconnect the temperature switch wiring.

Remove the temperature switch.

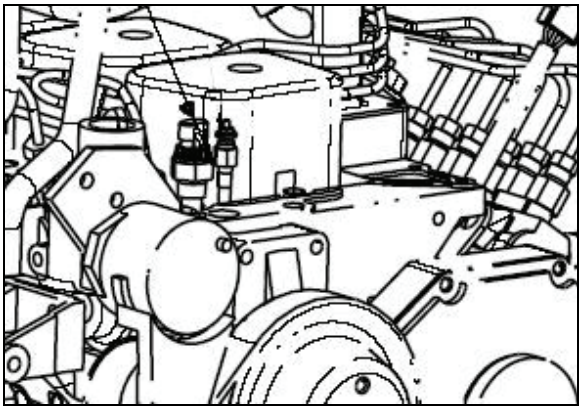

Install

Apply liquid teflon sealant to the threads when installing the temperature switch.

Install the temperature switch.

Torque Value:

(Cast Iron) 50 N•m [37 ft-lb]

(Aluminum) 30 N•m [22 ft-lb]

Reconnect the wiring.

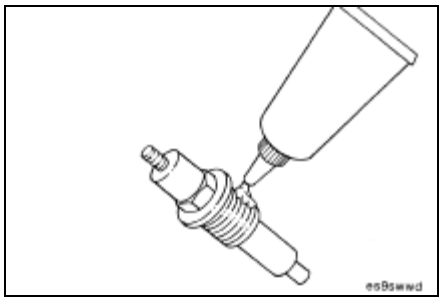

Coolant Temperature Switch Removal/Installation (Cont)

Follow-Up

Fill coolant to proper level. Refer to Drain and Flush Cooling System in Section 5.



Start the engine. Refer to Normal Local Starting Procedure in Section 3.

Check for leaks. Repair any leaks.

Check that engine operating temperature stabilizes between 82 and 94 °C [180 and 201 °F]. If temperature does not stabilize, stop the engine and refer to Coolant Temperature Above Normal or Coolant Temperature Below Normal (Engine Running) in Troubleshooting Section 12.

Coolant Thermostat Removal/Installation

NOTE: This instruction addresses the following thermostat models:

3917324, used for CFP59-F10, F20, F25, F40, F50, and F55 engines.

3917324, used for CFP59-F45 engines.

Use the applicable subsections within this procedure.

Prepare

WARNING

Coolant is toxic. Keep away from children and pets. If not reused, dispose of in accordance with local environmental regulations.

WARNING

Do not remove the pressure cap from a hot engine. Wait until the coolant temperature is below 50°C [120°F] before removing the pressure cap (Cummins Fire Power Part No.11407). Heated coolant spray or steam can cause personal injury.

CAUTION

Always use the correct thermostat, and never operate the engine without a thermostat installed. The engine can overheat if operated without a thermostat because the path of least resistance for the coolant is through the bypass to the pump inlet. An incorrect thermostat can cause the engine to overheat or run too cold.

Place the fire protection system in a safe mode for engine service.

Place the AUTO/MANUAL rocker switch in the MANUAL position.

Disconnect batteries at the battery source.



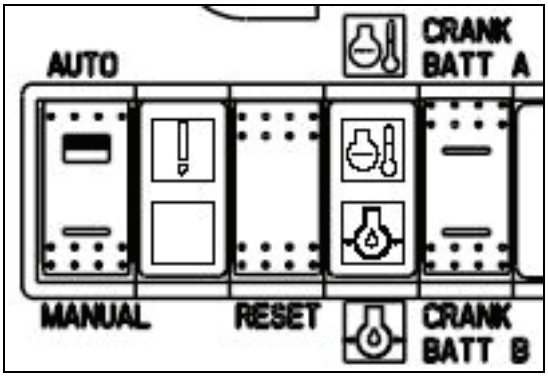

Coolant Thermostat Removal/Installation (Cont)

Drain the coolant. Refer to Drain and Flush Cooling System in Section 5.

Disconnect the upper engine coolant hose. Refer to Remove Upper Engine Coolant Hose in this section.

Disconnect the lower engine coolant and fill hoses. Refer to Remove Lower Engine Coolant and Fill Hose in this section.

Remove the belt guard. Refer to Belt Guard Removal/Installation in this section.

Remove the drive belt. Refer to Drive Belt Removal/Installation in this section.

Remove the alternator mounting capscrew, loosen the alternator link capscrew, and lower the alternator. Refer to Alternator Removal/Installation in this section.

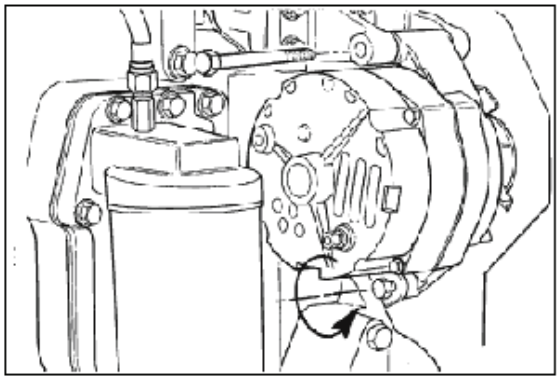

Remove (CFP59-F10, F15,F20, F25, F40, F50, F55)

Remove three capscrews, the thermostat housing, lifting bracket, thermostat, and thermostat seal.

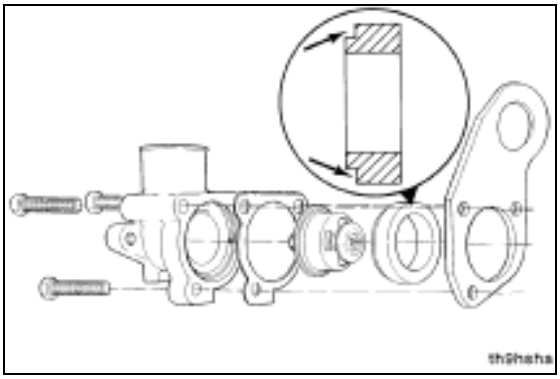

Coolant Thermostat Removal/Installation (Cont)

Remove (CFP59-F45)

Remove three capscrews, the thermostat housing, lifting bracket, thermostat, rectangular ring seal, check valve, and thermostat housing cover gasket.

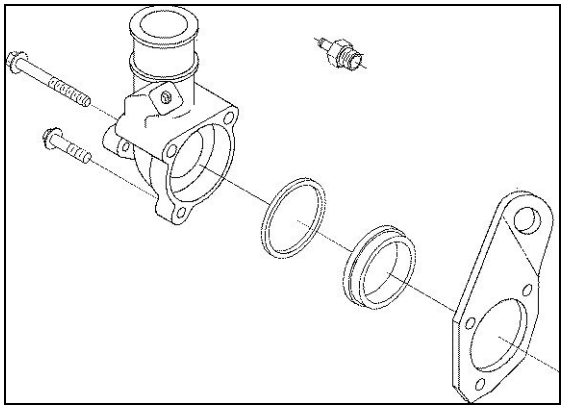

Clean

Clean the mating surfaces.

NOTE: Do not let any debris fall into the thermostat cavity when cleaning the gasket surfaces.

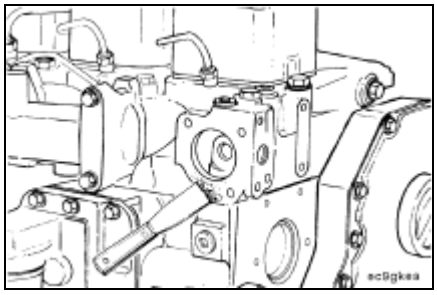

Thermostat Bench Test (Optional)

NOTE: Use this section to test a thermostat on the bench if the condition of the device is not known.

Inspect the thermostat for obvious damage such as obstructions caused by debris, broken springs, or stuck or missing vent pins.

Make sure the thermostat is clean and free from corrosion.

Replace any damaged or defective thermostat.

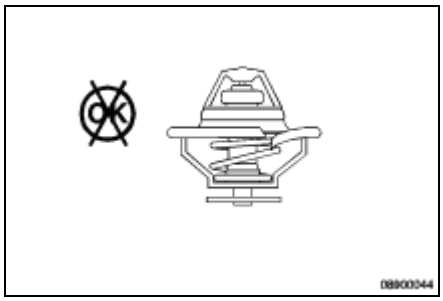

Coolant Thermostat Removal/Installation (Cont)

Suspend the thermostat and a 100°C [212°F] thermometer in a container of well-mixed water.

NOTE: Do not allow the thermostat or thermometer to touch the side of the container.

Heat the water slowly so the wax element in the thermostat has sufficient time to react to the rising water temperature.

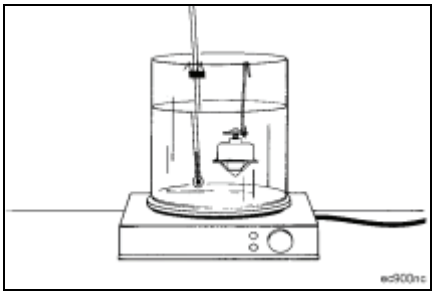

Check the thermostat operation and clearance as follows:

Opening:

Starts to open within 1°C [34°F] of 83°C [181°F].

Fully open within 1°C [34°F] of 95°C [203°F].

Full-open clearance between the thermostat flow valve and flange:

Minimum Flow Valve and Flange Clearance:

6.6 mm [0.26 in]

Install (CFP59-F10, F15, F20, F25, F40, F50, F55)

CAUTION

Always use the correct thermostat and never operate the engine without a thermostat. An incorrect thermostat can cause the engine to overheat or run too cold. The engine will overheat if operated without a thermostat because the coolant flows back to the inlet of the water pump instead of through the heat exchanger for cooling.

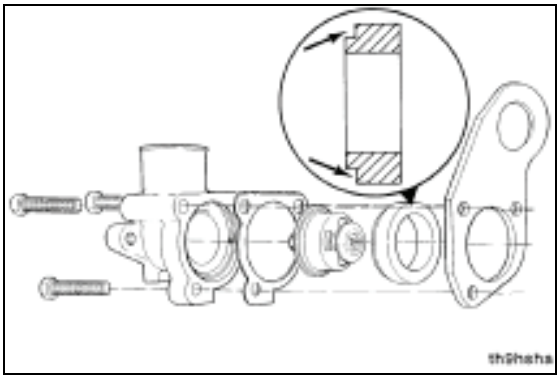

NOTE: Install only Cummins approved components. Install new thermostat (Cummins Part No. 3917324) if replacing the thermostat.

Coolant Thermostat Removal/Installation (Cont)

NOTE: Use a new thermostat seal (Cummins Part No. 3923331).

NOTE: Position the thermostat as shown in the illustration.

NOTE: The notched end of the rubber thermostat seal points away from the cylinder head.

Orient and position the lifting bracket and thermostat gasket to the thermostat and thermostat housing.

NOTE: Make sure the gasket is aligned with the capscrew holes.

Install the capscrews and finger tighten.

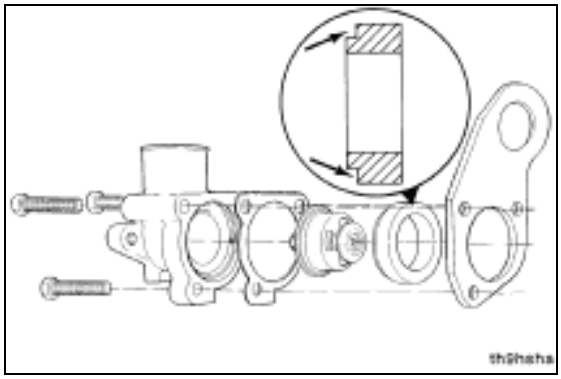

Tighten the capscrews.

Torque Value: 24 N•m [18 ft-lb]

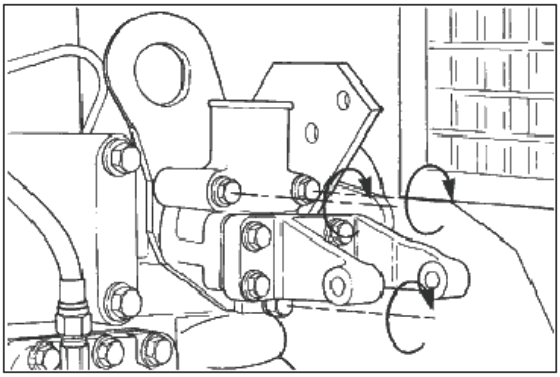

Coolant Thermostat Removal/Installation (Cont)

Install (CFP59-F45)

CAUTION

Always use the correct thermostat and never operate the engine without a thermostat. An incorrect thermostat can cause the engine to overheat or run too cold. The engine will overheat if operated without a thermostat because the coolant flows back to the inlet of the water pump instead of through the heat exchanger for cooling.

NOTE: Install only Cummins approved components. Install new thermostat (Cummins Part No. 3864178) if replacing the thermostat.

NOTE: Use a new rectangular ring seal (Cummins Part No. 3925466) and a new thermostat housing cover gasket (Cummins Part No. 3927305).

Orient and position the thermostat housing, lifting bracket, thermostat, rectangular ring seal, check valve, and thermostat housing cover gasket. Position the thermostat between the rectangular seal and the thermostat housing cover gasket.

Install the capscrews and finger tighten.

Install the check valve.

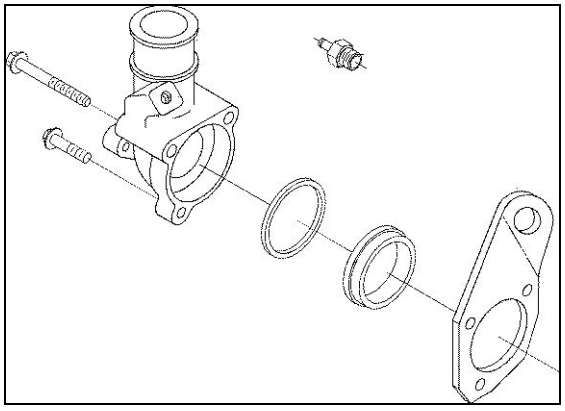

Tighten the capscrews.

Torque Value: 24 N•m [18 ft-lb]

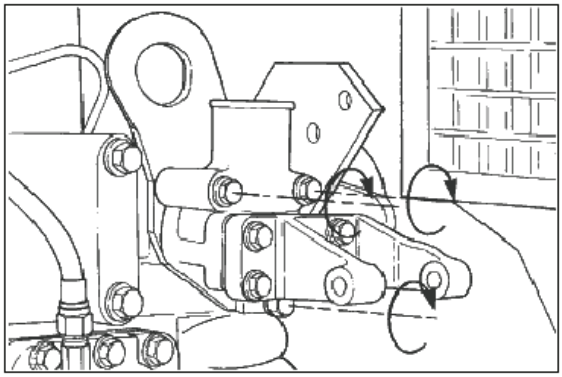

Coolant Thermostat Removal/Installation (Cont)

Follow-Up

Position the alternator and install the mounting capscrews. Refer to Alternator Removal/ Installation in this section.

Torque Values:

(A) 24 N•m [18 ft-lb]

(B) 43 N•m [32 ft-lb]

Install the drive belt.

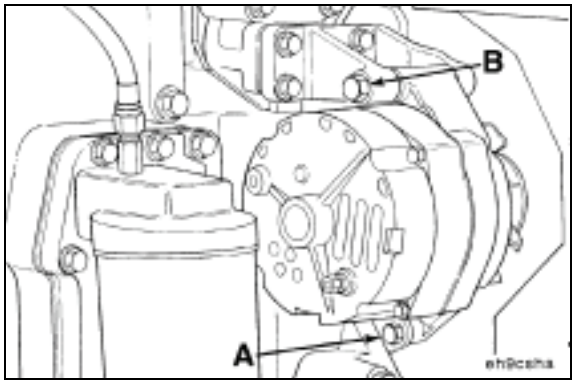

Install the upper engine coolant hose. Refer to Remove Upper Engine Coolant Hose in this section.

Install the drive belt. Refer to Belt Removal/Installation in this section.

Install the belt guard. Refer to Belt Guard Removal/Installation in this section.

Reconnect the lower engine coolant hose. Refer to Remove Lower Engine Coolant and Fill Hose in this section.

Refill the coolant. Refer to Drain and Flush Cooling System in Section 5.

Start the engine. Refer to Local Starting Procedure for Testing in Section 3.

Check for leaks. Repair any leaks.

Check that the alternator is charging.

NOTE: If temperature does not stabilize, stop the engine and refer to Coolant Temperature Above Normal or Coolant Temperature Below Normal (Engine Running) in Troubleshooting, Section 12.

Check that engine operating temperature stabilizes between about 82 and 93 ^{o}C [180 and 200 ^{o}F].

Coolant Thermostat Removal/Installation (Cont)

After the thermostat operation has been checked, stop the engine. Refer to Local Starting Procedure for Testing in Section 3.

Recheck the coolant level. Refer to Check Coolant Level in Section 5.

Reconnect batteries at the battery source.

Place the AUTO/MANUAL rocker switch in the AUTO position.

Return the fire protection system to operating status.

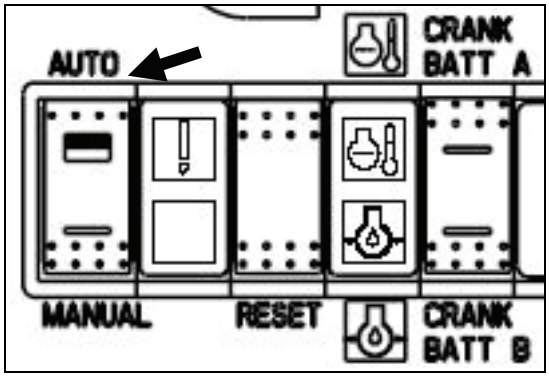

Coolant Thermostat Tests

NOTE: Perform these in-engine tests to determine if the thermostat is leak-tight and functioning.

Coolant Thermostat Leak Test

CAUTION

The engine thermostat must operate properly in order for the engine to operate in the most efficient heat range. Overheating or overcooling will shorten engine life.

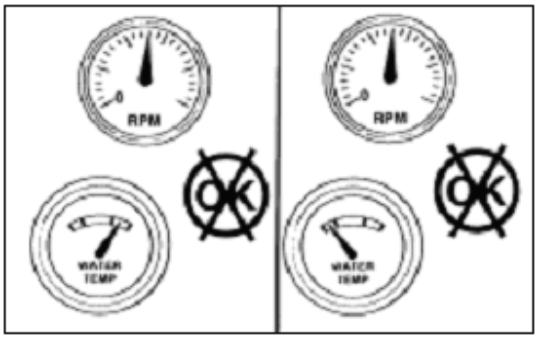

WARNING

Do not remove the pressure cap from a hot engine. Wait until the coolant temperature is below 50°C [120°F] before removing the pressure cap (Cummins Fire Power Part No.11407). Heated coolant spray or steam can cause personal injury.

Allow the engine to cool well below 83 °C [181 °F].

Loosen the hose clamp on the Upper Engine Coolant Hose. Remove the hose from the thermostat housing.

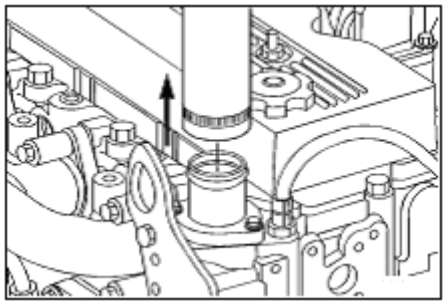

Install a hose of the same size on the thermostat housing outlet long enough to reach a remote, dry container used to collect coolant.

Install and tighten a hose clamp on the housing outlet.

Place the other end of the hose in a dry container.

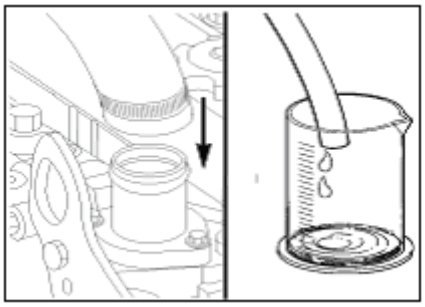

Coolant Thermostat Tests (Cont)

Start the engine. Refer to Local Starting Procedure for Testing in Section 3.

Operate the engine for one minute and then stop it.

Measure the amount of coolant collected in the container.

The amount of coolant collected must not be more than 100 cc [3.3 fl oz].

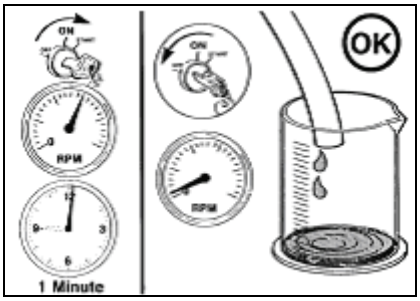

If more than 100 cc [3.3 fl oz] of coolant is collected, the thermostat is leaking and must be replaced. Refer to Coolant Thermostat Removal/Installation in this section.

If leakage is not present, then continue to perform the Coolant Thermostat Function Test below.

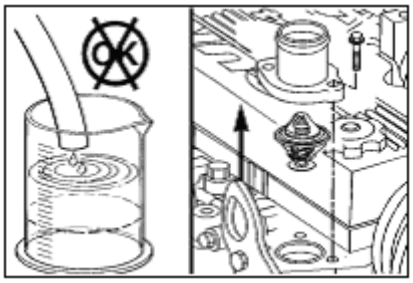

Coolant Thermostat Function Test

Start the engine and allow the engine to approach operating temperature.

Monitor the water temperature with an electronic service tool or a gauge.

Monitor the operation of the thermostat.

Thermostat Initial Opening Temperature

MIN: 82 °C [179 °F]

MAX: 84 °C [183 °F]

Stop the engine when the coolant starts to flow.

If the coolant does not start flowing into the container during the initial opening temperature range, the thermostat must be replaced. Refer to Coolant Thermostat Removal/Installation in this section.

Remove any test instruments.

Install the heat exchanger hose and tighten hose clamp.

Return any coolant to the engine.

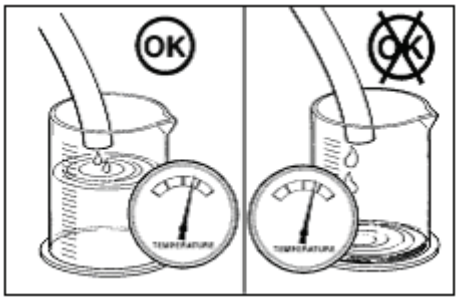

Coolant Water Pump Removal/Installation

Prepare

WARNING

Coolant is toxic. Keep away from children and pets. If not reused, dispose of in accordance with local environmental regulations.

WARNING

Do not remove the pressure cap from a hot engine. Wait until the coolant temperature is below 50C [120F] before removing the pressure cap (Cummins Fire Power Part No.11407). Heated coolant spray or steam can cause personal injury.

Place the fire protection system in a safe mode for engine service.

Place the AUTO/MANUAL rocker switch in the MANUAL position.



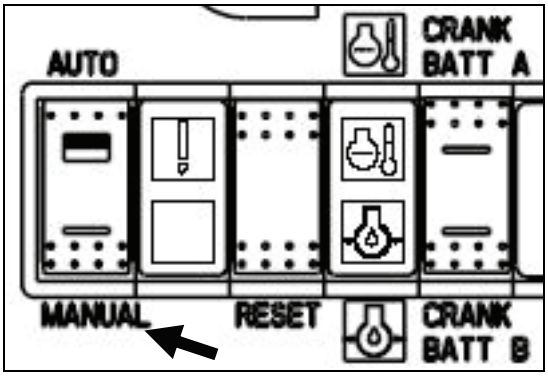

REMOVE BATTERY POWER BEFORE SERVICING ENGINE OR CONTROLS.

For safety reasons, both batteries must be disconnected before performing service on the Firepump Engine or on any of its controls. Before disconnecting the batteries, place the Firepump Controller in its appropriate service position in order to avoid a “Battery Failure” alarm.

Wear safety glasses when disconnecting batteries!

Next, disconnect both batteries at their terminals.



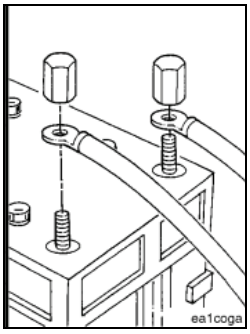

Coolant Water Pump Removal/Installation (Cont)

Drain engine coolant as required for the intended service. Refer to Drain and Flush Coolant System in Section 5.

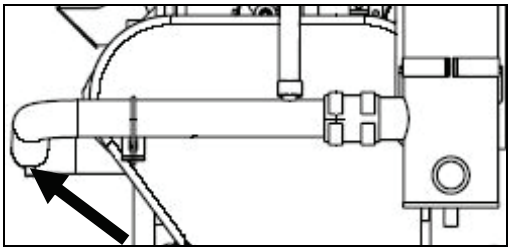

Disconnect the lower engine coolant and fill hoses. Refer to Remove Lower Engine Coolant and Fill Hose in this section.

Remove the Belt Guard. Refer to Belt Guard Removal/Installation in this section.

Remove the Drive Belt. Refer to Belt Removal/Installation in this section.

Remove

Remove the two capscrews, o-ring, and water pump.

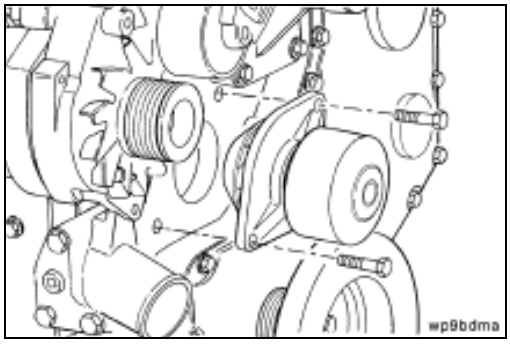

Clean

Clean the sealing surface on the cylinder block.

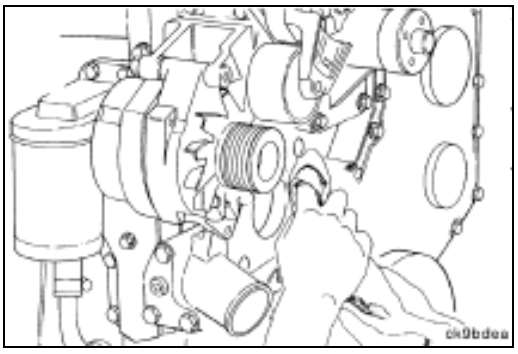

Clean the o-ring sealing surface on the water pump housing.

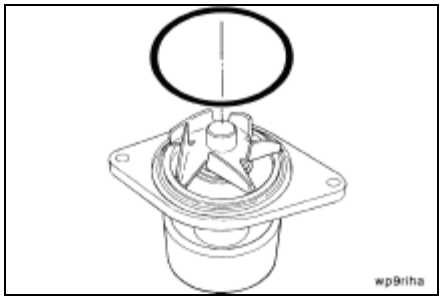

Coolant Water Pump Removal/Installation (Cont)

Inspect for Reuse

NOTE: A minor streak or chemical buildup at the weep hole is not justification for water pump replacement. The water pump seal design requires a coolant film for lubrication and cooling. Therefore, it is normal to observe a minor chemical buildup or streaking at the weep hole.

Inspect the water pump body for indications of water leakage at the weep hole. If a repeating drip of coolant is observed, replace the water pump with a new unit.

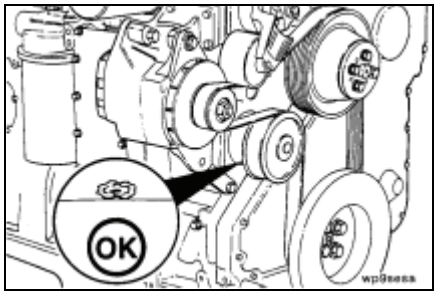

NOTE: A plugged weep hole can cause the water pump to fail. A small screwdriver or a small tool can be used to remove any debris.

Inspect the weep hole to make sure it is open.

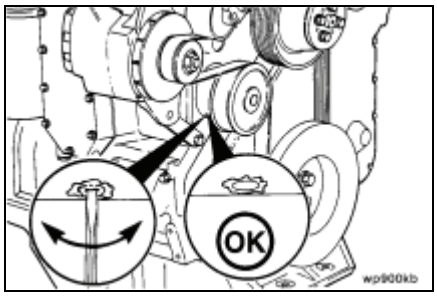

NOTE: Replace the water pump if it is damaged.

Inspect the water pump housing and impeller for any physical damage.

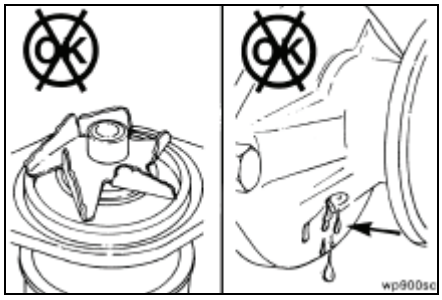

Install

NOTE: If reusing the original water pump, install a new water pump seal (Cummins Part No 3906698) onto the water pump housing. Otherwise, install a new water pump kit (Cummins Part No 3286275).

Position the new seal in the groove on the water pump.

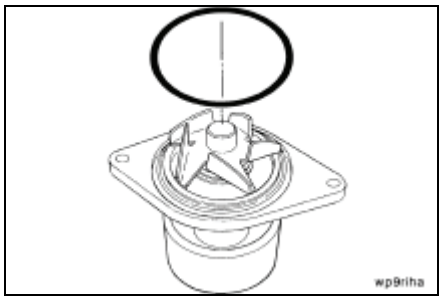

Coolant Water Pump Removal/Installation (Cont)

Install the water pump and two capscrews.

Torque Values:

9.8 Grade Capscrew: 24 N•m [18 ft-lb]

10.9 Grade Capscrew: 30 N•m [22 ft-lb]

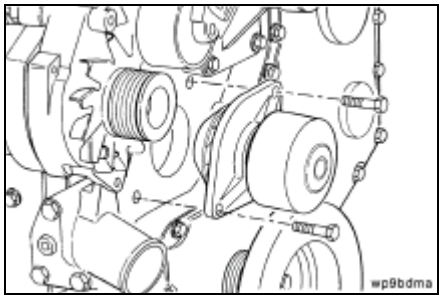

Follow-Up

Install the Drive Belt. Refer to Belt Removal/Installation in this section.

Install the Belt Guard. Refer to Belt Guard Removal/Installation in this section.

Reconnect the lower engine coolant hose. Refer to Install Lower Engine Coolant and Fill Hose in this section.

Refill the coolant. Refer to Drain and Flush Cooling System in Section 5.

For safety reasons, both batteries must be re-connected before putting the engine and fire protection system controller back in service.

Wear safety glasses when reconnecting batteries!

Reconnect the batteries at their terminals after all service work has been completed.

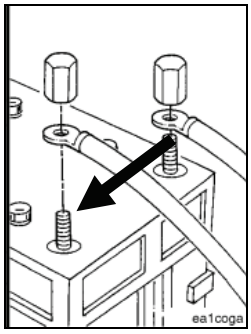

Coolant Water Pump Removal/Installation (Cont)

Start the engine. Refer to Local Starting Procedure for Testing in Section 3.

Observe that raw water is flowing through the coolant heat exchanger.

NOTE: A leak at the water pump weep hole is not justification for water pump replacement. The water pump seal design requires a coolant film for lubrication and cooling. Therefore, it is normal to observe an occasional drip.

Check for leaks. Repair any leaks.

Check that the drive belt makes no unusual noises.

Check that the alternator is charging.

NOTE: If temperature does not stabilize, stop the engine and refer to Coolant Temperature Above Normal or Coolant Temperature Below Normal (Engine Running) in Troubleshooting, Section 12.

Check that engine operating temperature stabilizes between about 82 and 93 °C [180 and 200 °F].

Check that no coolant hoses are collapsed.

After the thermostat operation has been checked, stop the engine. Refer to Local Starting Procedure for Testing in Section 3.

Recheck the coolant level. Refer to Check Coolant Level in Section 5.

Place the AUTO/MANUAL rocker switch in the AUTO position.

Return the fire protection system to operating status.

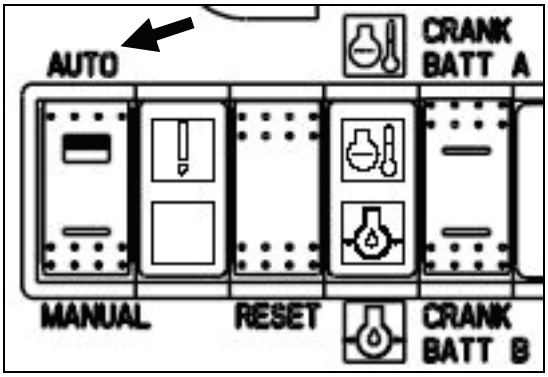

Alternator Checks and Testing

Alternator Wiring Integrity Check

NOTE: Refer to Drawing 10423 Sheet 1, Drawing 10423 Sheet 2, and Drawing 9767 in Section 13 for schematic details.

WARNING

Batteries can emit explosive gases. To reduce the possibility of personal injury, always ventilate the battery compartment before servicing the batteries.

WARNING

To reduce the possibility of arcing, remove the negative (-) battery cable first and attach the negative (-) battery cable last.

Check the battery and all wiring connections for damage. Refer to Battery Cables and Connections in this section.

Check all connections for tightness and cleanliness. Include both the slip connectors at the alternator and connections at the battery.

NOTE: Continuity should be in the single digit Ohms or less. Resistance to ground should be in the mega-Ohm range. Refer to any applicable customer criteria.

Using a digital multimeter or other test equipment, check for continuity between terminals. Check also the insulation resistance to ground.

Correct any electrical faults.

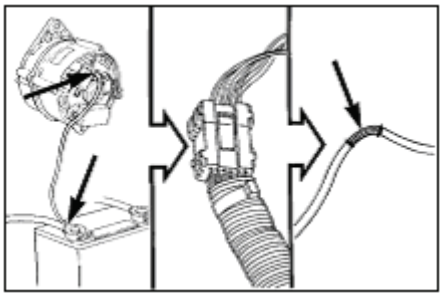

Alternator Mechanical Check

Start the engine. Refer to Normal Local Starting Procedure in Section 3.

Visually check the drive belt and alternator pulley to be sure the alternator is rotating.

Note any unusual noises such as from belt whine or alternator mechanical fault.

Stop the engine.

Correct any mechanical failures.

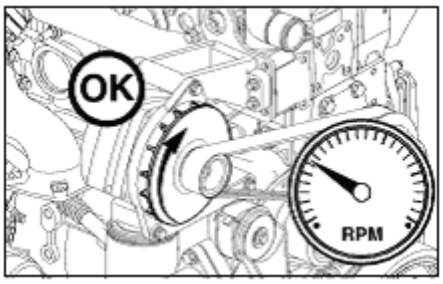

Alternator Checks and Testing (Cont)

Alternator Voltage Output Test

CAUTION

Batteries must have been satisfactorily load tested and must be charged with a resting voltage of more than 12.4 Volts for this testing.

CAUTION

Batteries must have been satisfactorily load tested and must be charged with a resting voltage of more than 12.4 Volts for this testing.

NOTE: Conduct this testing at normal shop temperature.

NOTE: Voltage should not exceed 15.5 V (for a 12 VDC system) or 31 V (for a 24 VDC system).

Start the engine and operate at rated speed. Refer to Normal Local Starting Procedure in Section 3.

Measure the alternator voltage output to the batteries with digital multimeter, Cummins Part Number 3377161.

Stop the engine.

Replace the alternator if the voltage exceeds specification. Refer to Alternator Removal/Installation in this section.

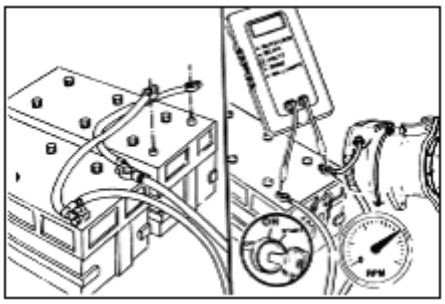

Alternator Checks and Testing (Cont)

Alternator Amperage Output Test

NOTE: Conduct this testing at normal shop temperature.

NOTE: Refer to Electrical Specifications in Section 10 for the minimum required alternator output. Use the value listed for the system voltage.

Connect a carbon pile load in parallel across the battery terminals. Refer to Jumpering the Batteries in Section 3 for how to make a parallel connection.

Connect a clamp-on (induction) ammeter across the alternator output cable.

Start the engine and operate at rated speed. Refer to Normal Local Starting Procedure in Section 3.

Adjust the carbon pile for maximum indication.

Note the amperage indicated on the ammeter.

Stop the engine.

Remove the test equipment.

Replace the alternator if the output is not 90% or more of the specification value. Refer to Alternator Removal/Installation in this section.

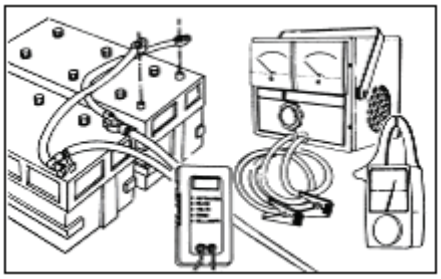

Alternator Removal/Installation

Prepare

Remove the belt guard. Refer to Belt Guard Removal/Installation in this section.

Remove the drive belt. Refer to Belt Removal/Installation in this section.

NOTE: Refer to Drawing 8513 Sheet 1 in Section 13 for wiring harness information.

NOTE: Ensure that the connectors are clearly tagged for the correct reconnection.

Disconnect the engine wiring harness connectors from the alternator.

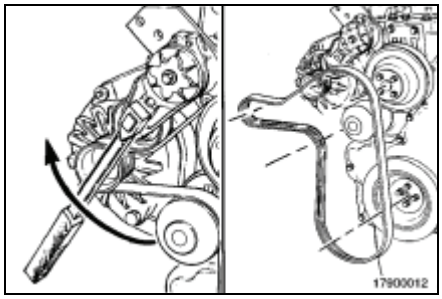

Remove

NOTE: If the alternator bracket must also be removed, go to Alternator Bracket Removal/Installation in this section.

Remove and tag all wires.

Complete the following steps.

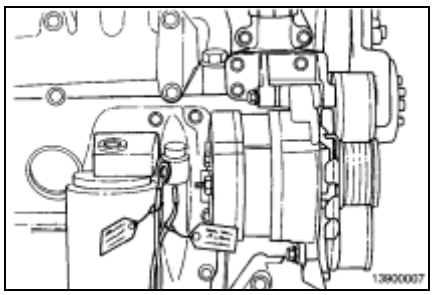

Remove the alternator link capscrew.

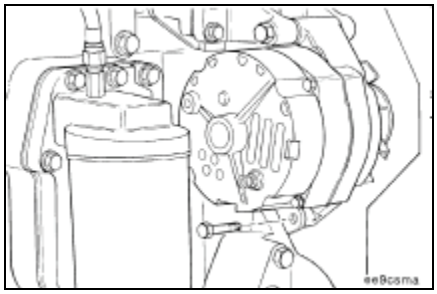

Alternator Removal/Installation (Cont)

Remove the alternator mounting capscrew.

Remove the alternator.

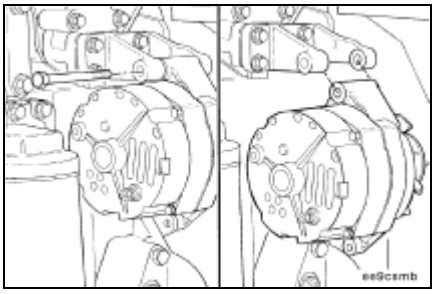

Install

Ensure that the alternator bracket is installed. Refer to Alternator Bracket Removal/Installation in this section.

NOTE: Wrench size and torque value are determined by the make and model of alternator. Refer to the Engine Component Torque Values.

To assemble the alternator, the alternator mounting components must be tightened in the following sequence:

Alternator-to-alternator bracket capscrew

Lower brace-to-alternator capscrew

Lower alternator brace-to-water pump capscrew

Water inlet-to-block capscrews.

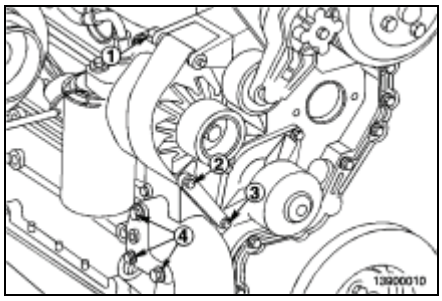

Follow-Up

NOTE: Refer to Drawing 8513 Sheet 1 in Section 13 for wiring harness information.

Connect the engine wiring harness connectors to the alternator.

Install the drive belt. Refer to Belt Removal/Installation in this section.

Install the belt guard. Refer to Belt Guard Removal/Installation in this section.

Alternator Bracket Removal/Installation

Prepare

Remove alternator. Refer to Alternator Removal/Installation in this section.

Remove

Remove alternator bracket mounting capscrews and bracket.

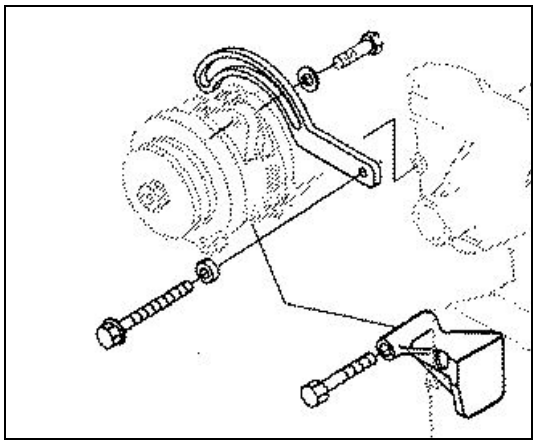

Install

Install the bracket and bracket mounting capscrews.

Torque Value: 24 N•m [18 ft-lb]

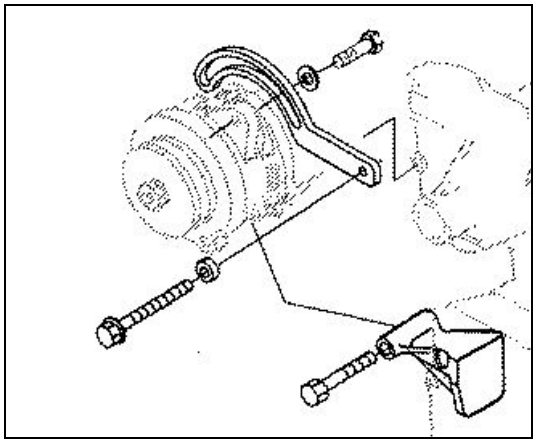

Follow-Up

Install the alternator. Refer to Alternator Removal/Installation in this section.

Battery Isolator Removal/Installation

Prepare

Place the fire protection system in a safe mode for engine service.

Place the AUTO/MANUAL rocker switch in the MANUAL position.

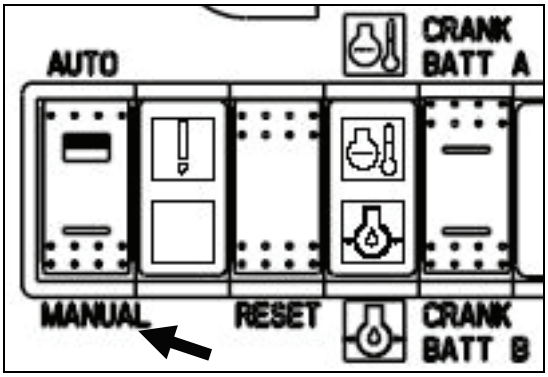

NOTE: Refer to Battery Removal/Installation in this section for detailed instructions for disconnecting the battery cable clamps.

Disconnect the negative battery cable from Battery A.

Disconnect the negative battery cable from Battery B.

Remove

NOTE: Ensure that all battery isolator wires are clearly tagged for reconnection. Also note the orientation of the existing isolator located behind the control panel.

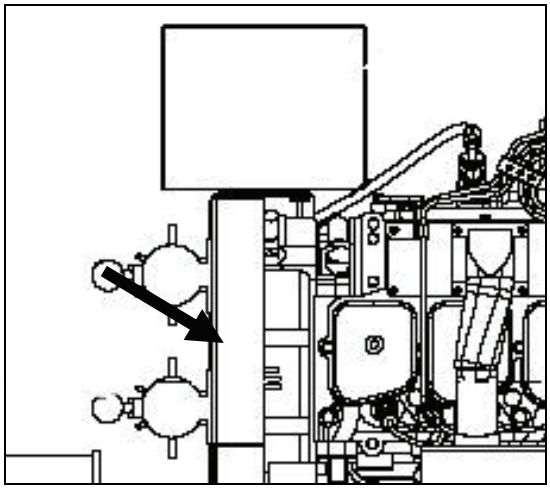

Battery Isolator Removal/Installation (Cont)

Disconnect the battery cable from terminal 1.

Disconnect the battery cable from terminal 2.

Disconnect the alternator cable from terminal A.

Disconnect the alternator excitation cable from terminal E.

Remove the four mounting nuts and the battery isolator.

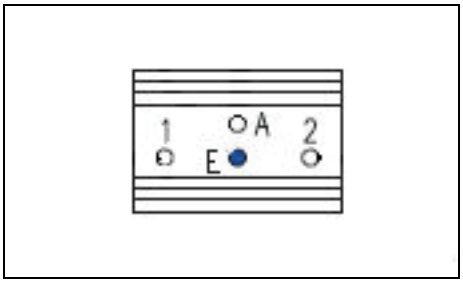

Install

Align and position the battery isolator on the four mounting studs located behind the control panel.

Install the four mounting nuts.

Torque Values: As per capscrew markings and torque values in Section 10

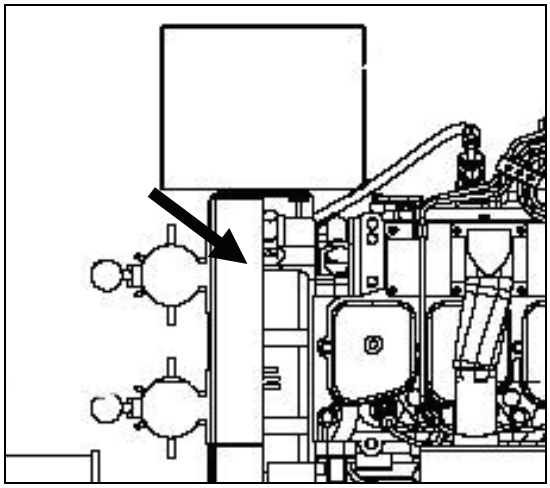

Connect the battery cable at terminal 1.

Connect the battery cable at terminal 2.

Connect the alternator cable at terminal A.

Connect the alternator excitation cable at terminal E.

Ensure that all four rubber caps are in position.

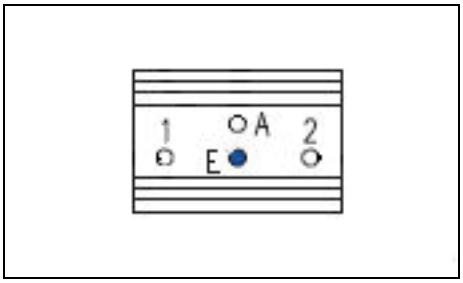

Follow-Up

NOTE: Refer to Battery Removal/Installation in this section for detailed instructions for connecting the battery cable clamps.

Connect the negative battery cable at Battery A.

Connect the negative battery cable at Battery B.

Battery Isolator Removal/Installation (Cont)

NOTE: Refer to Drawing 10423 Sheet 2 for schematic details. Measure voltages at the most convenient location.

With the engine off, verify the following voltages at the battery isolator terminals to ground:

- Terminal 1 indicates battery voltage.
- Terminal 2 indicates the other battery voltage.
- Terminal E indicates no voltage.

Start the engine. Refer to Normal Local Starting Procedure in Section 3.

With the engine running, verify the following voltages at the battery isolator terminals to ground:

- Terminal 1 indicates battery voltage.
- Terminal 2 indicates the other battery voltage.
- Terminal E indicates battery voltage.
- Terminal A indicates about 1 volt higher than battery voltage.

Stop the engine.

Place the AUTO/MANUAL rocker switch in the AUTO position.

Return the fire protection system to operating status.

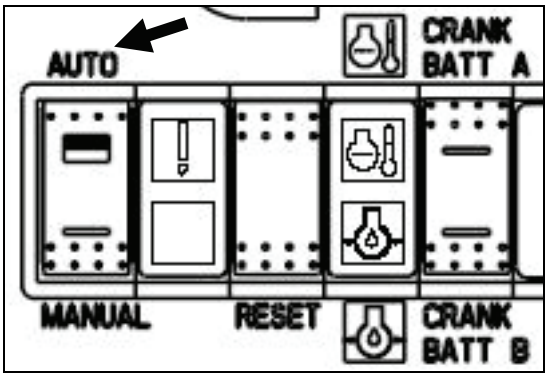

Engine Harness Removal/Installation

Prepare

Place the fire protection system in a safe mode for engine service.

Place the AUTO/MANUAL rocker switch in the MANUAL position.



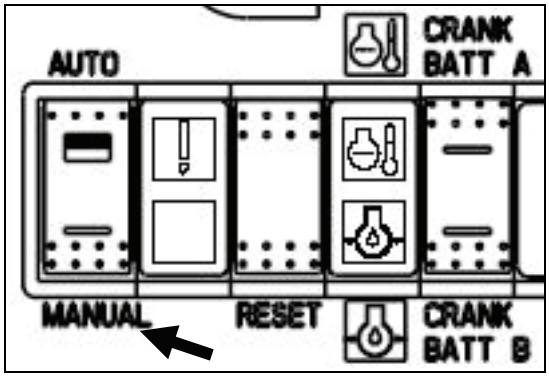

NOTE: Refer to Battery Removal/Installation in this section for detailed instructions for disconnecting the battery cable clamps.

Disconnect the negative battery cable from Battery A.

Disconnect the negative battery cable from Battery B.

Remove

NOTE: Refer to Drawing 8513 Sheet 1 in Section 13 for a depiction of the engine wiring harness.

NOTE: Ensure that each terminal is properly labeled for ease of reconnection.

Disconnect the harness connection at each terminal.

Install

NOTE: Refer to Drawing 8513 Sheet 1 in Section 13 for a depiction of the engine wiring harness.

Connect the harness connection at each terminal.

Engine Harness Removal/Installation (Cont)

Follow-Up

NOTE: Refer to Battery Removal/Installation in this section for detailed instructions for connecting the battery cable clamps.

Connect the negative battery cable at Battery A.

Connect the negative battery cable at Battery B.

NOTE: Refer to Second Start in Section 3 for the suggested checks.

Start the engine. Refer to Normal Local Starting Procedure in Section 3.

Observe that the engine starts with no unusual noises or vibrations.

Verify that the engine reaches operating temperature.

Stop the engine.

Place the AUTO/MANUAL rocker switch in the AUTO position.

Return the fire protection system to operating status.

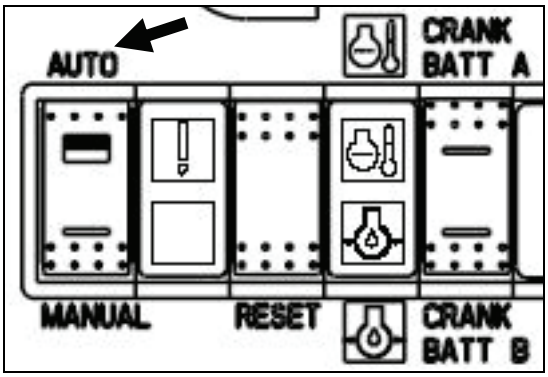

Voltmeter Removal/Installation

Prepare

Place the fire protection system in a safe mode for engine service.

Place the AUTO/MANUAL rocker switch in the MANUAL position.

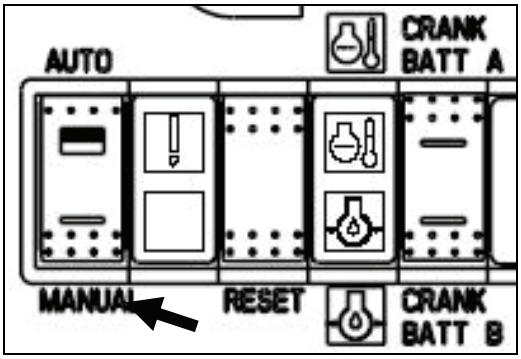

REMOVE BATTERY POWER BEFORE SERVICING ENGINE OR CONTROLS.

For safety reasons, both batteries must be disconnected before performing service on the Firepump Engine or on any of its controls. Before disconnecting the batteries, place the Firepump Controller in its appropriate service position in order to avoid a “Battery Failure” alarm.

Wear safety glasses when disconnecting batteries!

Next, disconnect both batteries at their terminals.

NOTE: Refer to Control Panel Fuse Replacement in this section for fuse location information.

Remove the electrical fuse from the fuse block as follows:

- For Voltmeter A, remove Fuse F1
- For Voltmeter B, remove Fuse F2

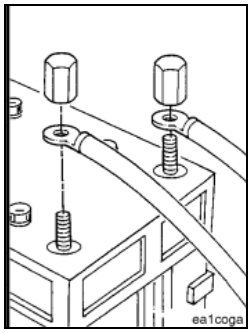

Remove

NOTE: Refer to Drawing 10423 Sheet 1 in Section 13 for electrical schematic details.

Open the local control panel.

NOTE: Ensure that the wires are clearly tagged for reconnection.

Loosen the nuts on the stud and remove the wires.

Remove the nuts on the mounting bracket and remove the voltmeter from the panel.

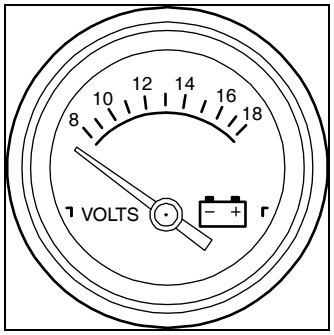

Voltmeter Removal/Installation (Cont)

Install

Orient the voltmeter in the cutout in the electrical panel.

Position the mounting bracket on the gauge.

Install the mounting nuts.

Reconnect the electrical wires on the studs in the same positions as they were originally installed.

Tighten the nuts on the studs.

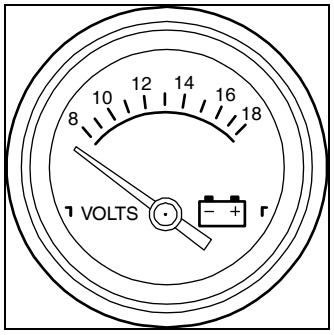

For safety reasons, both batteries must be re-connected before putting the engine and fire protection system controller back in service.

Wear safety glasses when reconnecting batteries!

Reconnect the batteries at their terminals after all service work has been completed.

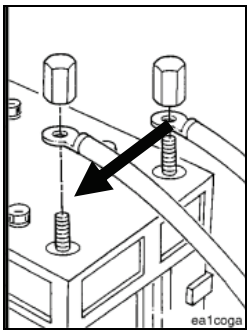

Place the AUTO/MANUAL rocker switch in the AUTO position.

Return the fire protection system to operating status.

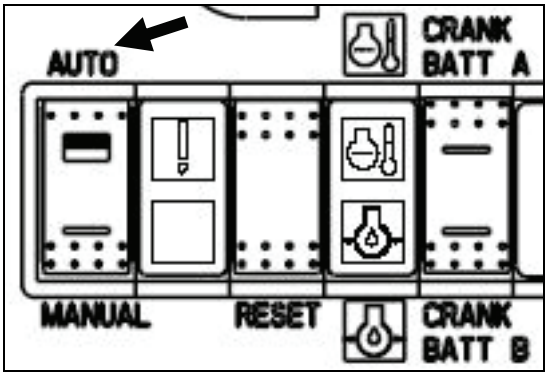

Battery Testing

WARNING

Batteries can emit explosive gases. To avoid injury, always ventilate the compartment before servicing the batteries. To avoid arcing, remove the negative (-) battery cable first and attach the negative (-) battery cable last.

WARNING

Acid is extremely dangerous and can damage the machinery and can also cause serious burns. Always provide a strong tank of soda water as a neutralizing agent when servicing the batteries. Wear goggles and protective clothing to avoid serious burns.

NOTE: This section is for conventional batteries only. Maintenance-free batteries may be supplied by the customer. These are sealed and do not require the addition of water. Also, specific gravity cannot be checked. If the batteries are not supplied by Cummins Fire Power, follow the battery manufacturer's recommendations for testing and servicing their batteries.

Prepare

Place the fire protection system in a safe mode for engine service.

Place the AUTO/MANUAL rocker switch in the MANUAL position.



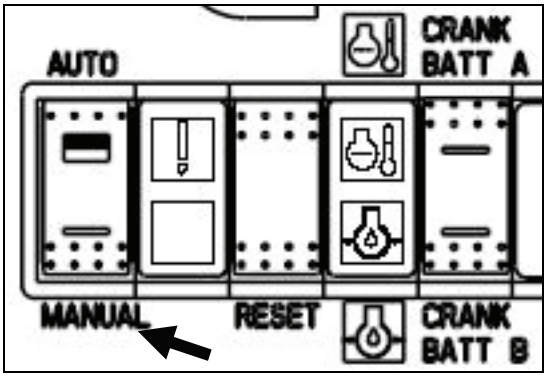

REMOVE BATTERY POWER BEFORE SERVICING ENGINE OR CONTROLS.

For safety reasons, both batteries must be disconnected before performing service on the Firepump Engine or on any of its controls. Before disconnecting the batteries, place the Firepump Controller in its appropriate service position in order to avoid a "Battery Failure" alarm.

Wear safety glasses when disconnecting batteries!

Next, disconnect both batteries at their terminals.



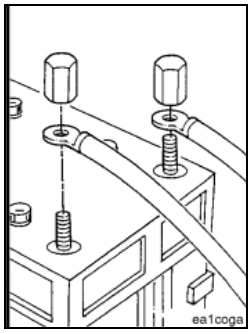

Battery Testing (Cont)

Check Electrolyte Level

Remove all cell covers for both sets of batteries.

Check the electrolyte level in each cell of each battery.

NOTE: Cummins recommends the use of a self-leveling filler. If a syringe type filler is used, use care to prevent overflow or splashing of acid from the cell.

CAUTION

Do not overfill the cell. Fill only to the level indication.

CAUTION

If a syringe type filler is used, use care to prevent overflow or splashing of acid from the cell.

As required, fill each battery cell with distilled water.

Install all cell covers for both sets of batteries.

If water was added, recharge the battery prior to checking specific gravity.

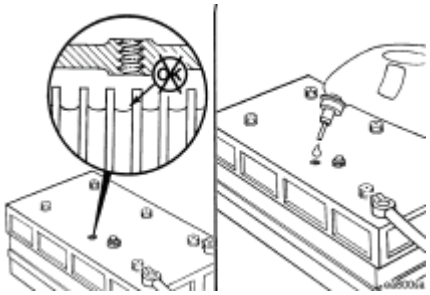

Battery Testing (Cont)

Check Specific Gravity

NOTE: If water has been added to a dry cell, recharge the battery to mix the added water with the existing battery electrolyte. This will prevent incorrect readings.

NOTE: The battery must be more than about ¼ charged before the hydrometer readings can be accurate. Accurate readings may require several hours of charging for a fully discharged battery.

Use a hydrometer to measure the specific gravity of each cell.

State of Charge and Specific Gravity*

% Charged	Non-Tropical	Tropical
100%	1.265	1.225
75%	1.225	1.185
50%	1.190	1.150
25%	1.155	1.115
0%	1.120	1.080

* At 26.7 °C [80 °F]

Check the battery fluid column in the refractometer to determine the state of charge of each battery cell.

NOTE: Evaluate the state of charge in respect to the local requirements. A cold location will require a greater specific gravity than a hot climate for the necessary cranking amperes.

If charge is low, charge the batteries. Refer to Battery and Electrical Installation in Section 3.

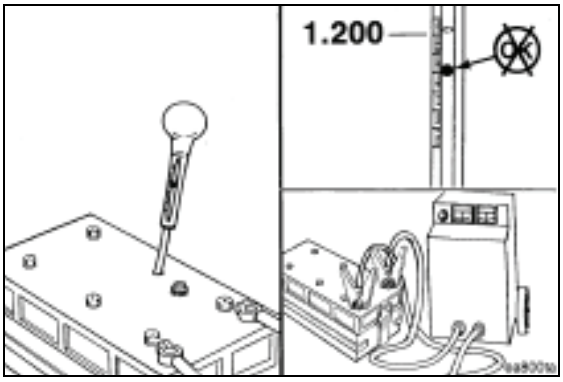

Battery Testing (Cont)

Check Battery Output

CAUTION

Do not connect battery charging cables to any electronic control system part. This can damage the electronic control system parts.

NOTE: Use the inductive charging-cranking systems analyzer, Cummins Part Number 3377193, to test the output amperage of either maintenance-free or conventional vent cap batteries. Follow the instructions provided with the test equipment.

NOTE: The required battery output in cold cranking amperes is provided in Electrical System Specifications in Section 10. Use the listed value for the system voltage.

Test both sets of batteries.

NOTE: For customer supplied batteries, refer to the manufacturer's literature for charging instructions.

If the output amperage is low, charge the battery. Refer to Battery and Electrical Installation in Section 3.

Replace the battery if it will not charge to the manufacturer's specifications or will not maintain a charge.

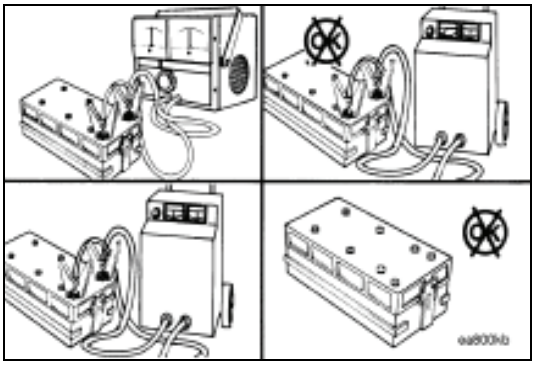

For safety reasons, both batteries must be re-connected before putting the engine and fire protection system controller back in service.

Wear safety glasses when reconnecting batteries!

Reconnect the batteries at their terminals after all service work has been completed.

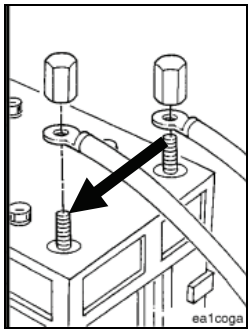

Battery Testing (Cont)

Place the AUTO/MANUAL rocker switch in the AUTO position.

Return the fire protection system to operating status.



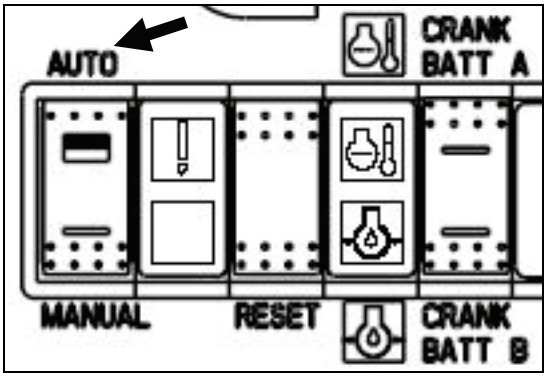

Battery Removal/Installation

WARNING

Batteries can emit explosive gases. To avoid injury, always ventilate the compartment before servicing the batteries.

WARNING

Acid is extremely dangerous and can damage the machinery and can also cause serious burns. Always provide a strong tank of soda water as a neutralizing agent when servicing the batteries. Wear goggles and protective clothing to avoid serious burns.

Prepare

Place the fire protection system in a safe mode for engine service.

Place the AUTO/MANUAL rocker switch in the MANUAL position.

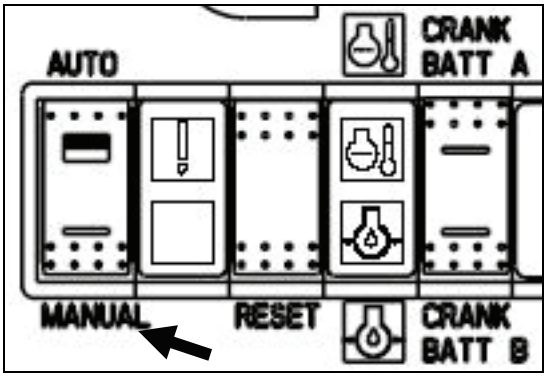

REMOVE BATTERY POWER BEFORE SERVICING ENGINE OR CONTROLS.

For safety reasons, both batteries must be disconnected before performing service on the Firepump Engine or on any of its controls. Before disconnecting the batteries, place the Firepump Controller in its appropriate service position in order to avoid a “Battery Failure” alarm.

Wear safety glasses when disconnecting batteries!

Next, disconnect both batteries at their terminals.

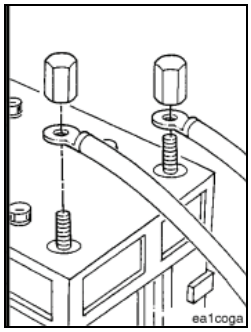

Clear and ventilate the battery storage area.

Collect the necessary tools and safety equipment.

Battery Removal/Installation (Cont)

Remove

NOTE: Use the correct battery tools. Use end wrenches to loosen the battery clamps. Use a battery cable puller to remove tight cable clamps from the battery terminal. Use a battery carrier to lift and carry the battery.

Remove any battery support hardware.

WARNING

To reduce the possibility of arcing, remove the negative (-) battery cable first.

Loosen the battery cable clamps.

Remove the negative battery cable first.

Remove the positive battery cable first.

WARNING

Do not tip the battery and spill the acid.

Using a battery carrier, lift and remove the battery.

If disposing of the battery, dispose of it in accordance with all applicable environmental regulations.

Clean

NOTE: Use the correct battery tools. Use a terminal cleaning brush for the battery terminal. Use a putty knife and wire brush to remove dirt and corrosion from the battery body and any support.

Clean the battery posts to remove all corrosion and to expose the metal.

Remove any other corrosion or debris from the battery body or battery support.

Battery Removal/Installation (Cont)

Install

NOTE: Use the correct battery tools. Use a battery cable clamp spreader to install tight cable clamps on the battery terminal. Use end wrenches to tighten the battery clamps.

WARNING

Do not tip the battery and spill the acid.

Using a battery carrier, carry and position the battery.

WARNING

To reduce the possibility of arcing, attach the negative (-) battery cable last.

Spread the positive cable clamp and position the clamp on the post.

Tighten the positive cable clamp.

Spread the negative cable clamp and position the clamp on the post.

Tighten the negative cable clamp.

Torque Values; As per capscrew markings and torque values in Section 10

Install any battery support hardware.

Follow-Up

If new batteries are installed, charge the batteries. Refer to Battery and Electrical Installation in Section 3.

For safety reasons, both batteries must be re-connected before putting the engine and fire protection system controller back in service.

Wear safety glasses when reconnecting batteries!

Reconnect the batteries at their terminals after all service work has been completed.

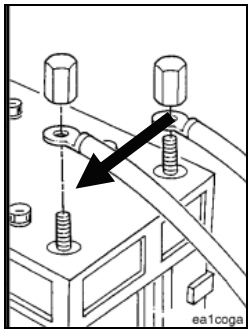

Battery Removal/Installation (Cont)

Place the AUTO/MANUAL rocker switch in the AUTO position.

Return the fire protection system to operating status.



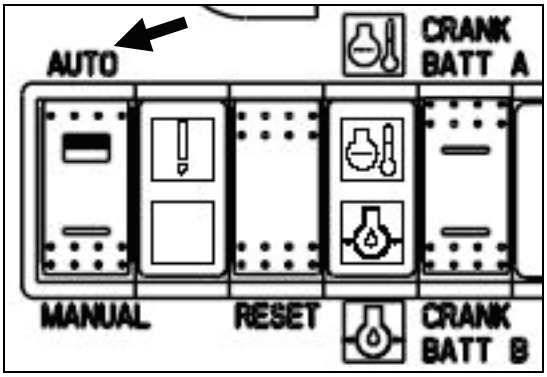

Check Battery Cables and Connections

WARNING

Batteries can emit explosive gases. To reduce the possibility of personal injury, always ventilate the compartment before servicing the batteries.

WARNING

To reduce the possibility of arcing, remove the negative (-) battery cable first and attach the negative (-) battery cable last.

NOTE: There are two possible heavy-duty battery connections:

- Battery terminal and clamp
- Threaded battery terminal and nut

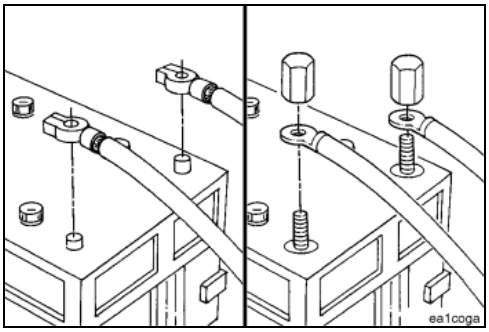

Remove and inspect the battery cables and connections for cracks or corrosion.

Replace broken terminals, connectors, or cables.

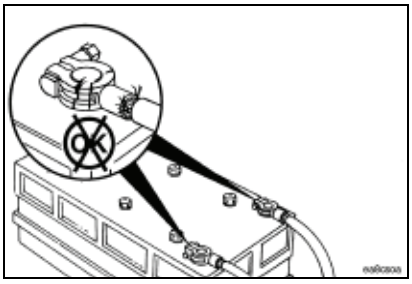

If the connections are corroded, use a battery brush or wire brush to clean the connections until shiny.

Alternatively, if a brush won't do the job, use an acid neutralizing solution to remove the corrosion.

Brush or wipe all residue or debris from the terminals.

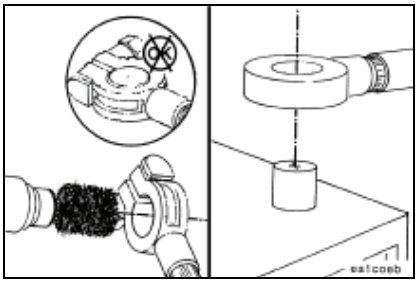

NOTE: Coat the terminals with a high temperature grease to prevent corrosion.

Install the cables and tighten the battery connections.

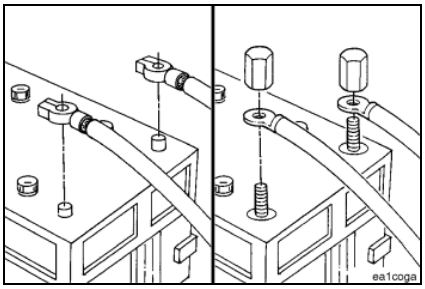

Starter Motor Assembly Removal/Installation

Prepare

Place the fire protection system in a safe mode for engine service.

Place the AUTO/MANUAL rocker switch in the MANUAL position.

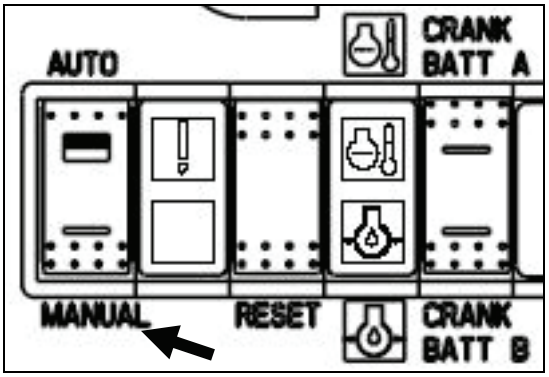

REMOVE BATTERY POWER BEFORE SERVICING ENGINE OR CONTROLS.

For safety reasons, both batteries must be disconnected before performing service on the Firepump Engine or on any of its controls. Before disconnecting the batteries, place the Firepump Controller in its appropriate service position in order to avoid a “Battery Failure” alarm.

Wear safety glasses when disconnecting batteries!

Next, disconnect both batteries at their terminals.

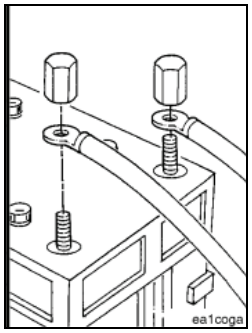

Remove

Remove the three capscrews and starter motor.

Inspect the starter motor gears. If gear damage is present, check also the ring gear.

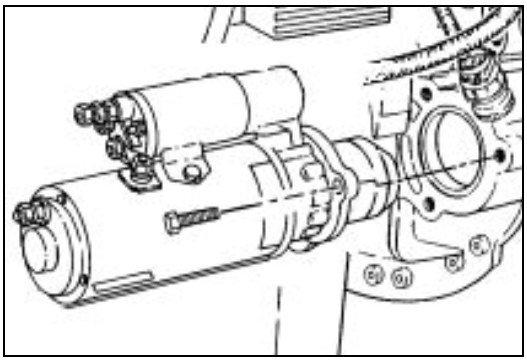

Starter Motor Removal/Installation (Cont)

Install

NOTE: Use only the Delco 39MT replacement starter Cummins Part No. ST9370 / 3971603 (12 VDC standard) or Cummins Part No. ST9258 / 3957598 (24 VDC optional).

Align and install the starter motor.

Install and tighten the three mounting capscrews.

Torque Value: 43 N•m [32 ft-lb]

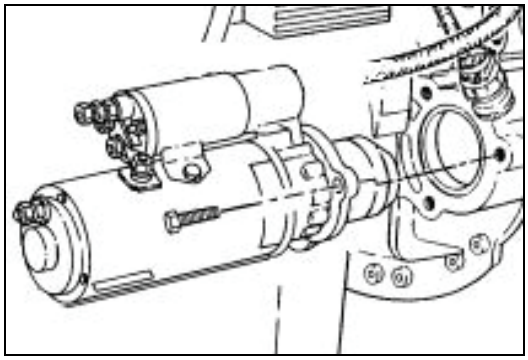

For safety reasons, both batteries must be re-connected before putting the engine and fire protection system controller back in service.

Wear safety glasses when reconnecting batteries!

Reconnect the batteries at their terminals after all service work has been completed.

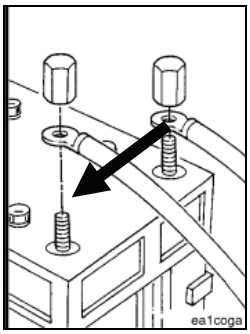

Start the engine. Refer to Normal Local Starting Procedure in Section 3.

Observe that the engine starts with no unusual noises or vibrations.

Stop the engine.

Place the AUTO/MANUAL rocker switch in the AUTO position.

Return the fire protection system to operating status.

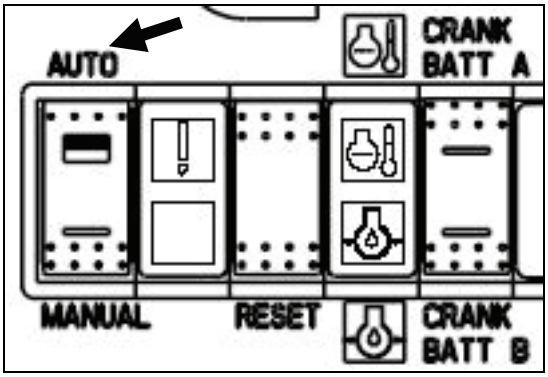

Crank Solenoid Assembly Removal/Installation

NOTE: Use this procedure to remove and install either or both of the crank solenoid assemblies. The crank solenoid assembly sub-components are not serviceable parts as supplied by Cummins Fire Power.

Prepare

Place the fire protection system in a safe mode for engine service.

Place the AUTO/MANUAL rocker switch in the MANUAL position.



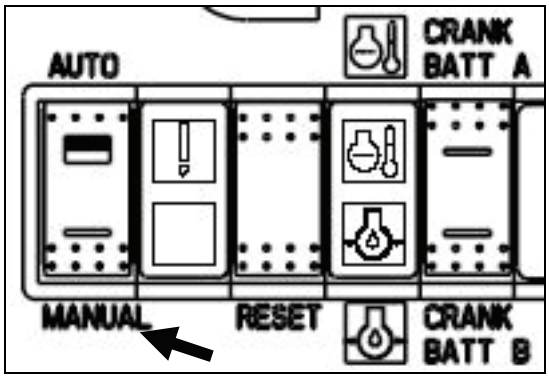

NOTE: Refer to Battery Removal/Installation in this section for detailed instructions for disconnecting the battery cable clamps.

Disconnect the negative battery cable from Battery A.

Disconnect the negative battery cable from Battery B.

Remove

NOTE: Refer to Drawing 10423 Sheet 1 in Section 13 for schematic information related to the crank solenoid assemblies.

NOTE: Ensure that the wires are clearly identified for ease of reconnection.

NOTE: Observe the location of flat and lock washers for ease of reconnection.

NOTE: Save the nuts, bolts, flat washers, and lock washers for reuse.

Disconnect all electrical connectors from the solenoid's four terminal studs.

Loosen the four sets of mounting nuts, bolts, and washers.

Remove the crank solenoid and fasteners from the engine.

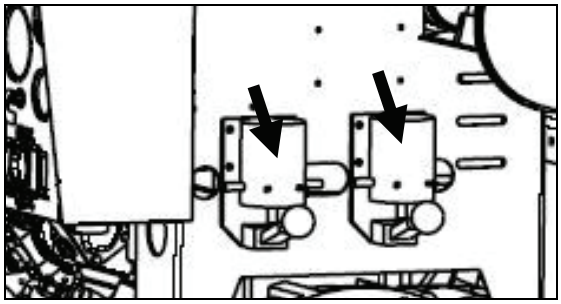

Crank Solenoid Assembly Removal/Installation (Cont)

Install

NOTE: Install the correct component. For 12 VDC systems, use Cummins NPower Part No 8824. For 24 VDC systems, use Cummins NPower Part No 8846.

Position the four bolts through the mounting holes.

Position the crank solenoid on the bolts, add the lock washers, and start the nuts.

Tighten the four mounting nuts.

NOTE: Refer to Drawing 10423 Sheet 1 in Section 13 for crank solenoid schematic information.

Position the flat washers, cable lugs, lock washers, and nuts on the studs in the same order as was removed.

Tighten the nuts on the studs.

Torque Values: As per capscrew markings and torque values in Section 10

With power still disconnected, verify that the lever handle on the crank solenoid operates freely.

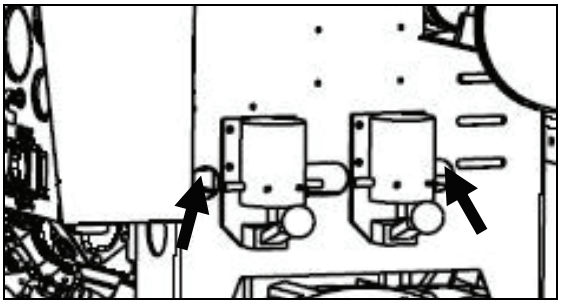

Follow-Up

NOTE: Refer to Battery Removal/Installation in this section for detailed instructions for reconnecting the battery cable clamps.

Connect the negative battery cable from Battery A.

Connect the negative battery cable from Battery B.

Crank Solenoid Assembly Removal/Installation (Cont)

Demonstrate Local Electrical Start

NOTE: If Crank Solenoid A was replaced, start the engine using CRANK BATT A. Alternatively; use B if B was replaced.

Start the engine electrically from the local control panel. Refer to Normal Local Starting Procedure in Section 3.

Verify that the engine starts normally with no unusual indications.

Stop the engine.

Demonstrate Local Manual Start

NOTE: If Crank Solenoid A was replaced, start the engine using CRANK BATT A. Alternatively; use B if B was replaced.

Start the engine manually from the crank solenoid lever handle. Refer to Normal Local Starting Procedure in Section 3.

Verify that the engine starts normally with no unusual indications.

Stop the engine.

Place the AUTO/MANUAL rocker switch in the AUTO position.

Return the fire protection system to operating status.

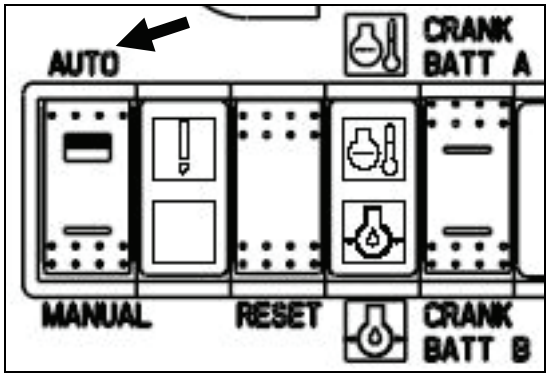

Control Panel Fuse Replacement

Prepare

Place the fire protection system in a safe mode for engine service.

Place the AUTO/MANUAL rocker switch in the MANUAL position.

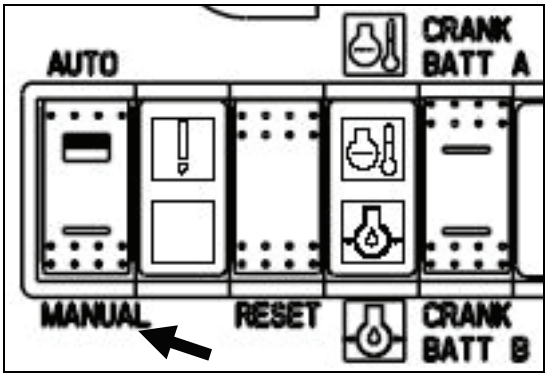

REMOVE BATTERY POWER BEFORE SERVICING ENGINE OR CONTROLS.

For safety reasons, both batteries must be disconnected before performing service on the Firepump Engine or on any of its controls. Before disconnecting the batteries, place the Firepump Controller in its appropriate service position in order to avoid a “Battery Failure” alarm.

Wear safety glasses when disconnecting batteries!

Next, disconnect both batteries at their terminals.

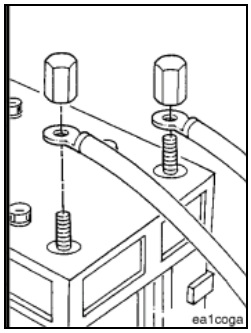

Remove

Open the fire pump engine’s local control panel.

Loosen the cover screw and remove the fuse block cover.

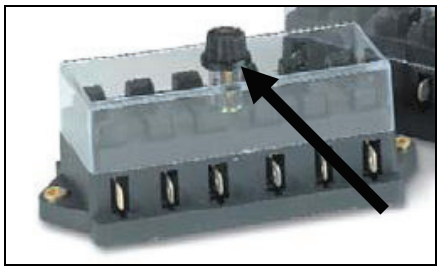

Control Panel Fuse Replacement (Cont)

NOTE: The fuses are ATO/ATC ¼" blade type automotive fuses. The 20 Amp fuses (Fuse 1, 2, and 3) are colored yellow. The five amp fuse is colored tan.

NOTE: Refer to Drawing 10423 Sheet 1 in Section 13 for schematic details.

NOTE: The fuses are ordered from top to bottom as follows:

- 5 A Fuse F4 (Control Panel Indications)
- 20 A Fuse F1 (Battery A)
- 20 A Fuse F2 (Battery B)
- 20 A Fuse F3 (Crank Circuit)

Select the fuse for testing or replacement.

Pull the fuse from the fuse block.

Check for continuity either visually or with an ohmmeter.

Check for short circuits to ground on any fuse circuit that had an open circuited fuse. Correct any faults.

If necessary, remove, test, or replace the engine harness. Refer to Engine Harness Removal/Installation in this section.



Install

Replace any fuse with an open circuit. Place the new fuse into the fuse block and press it in until the fuse is properly inserted.

Install the fuse block cover and tighten the cover screw.

Close the control panel.

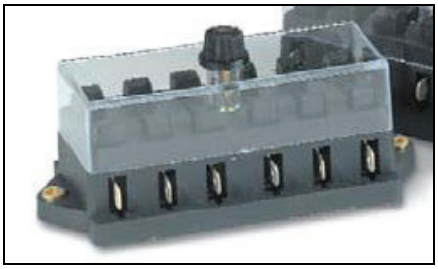

For safety reasons, both batteries must be re-connected before putting the engine and fire protection system controller back in service.

Wear safety glasses when reconnecting batteries!

Reconnect the batteries at their terminals after all service work has been completed.

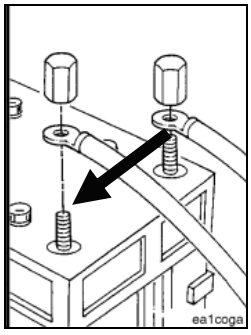

Control Panel Fuse Replacement (Cont)

NOTE: If Fuse 1 or Fuse 2 was replaced, start the engine using CRANK BATT A or CRANK BATT B respectively.

Start the engine. Refer to Normal Local Starting Procedure in Section 3.

Observe that the engine starts with no unusual indications.

Observe that engine speed is indicated.

Observe that raw water flow has started.

Stop the engine.

Place the AUTO/MANUAL rocker switch in the AUTO position.

Return the fire protection system to operating status.

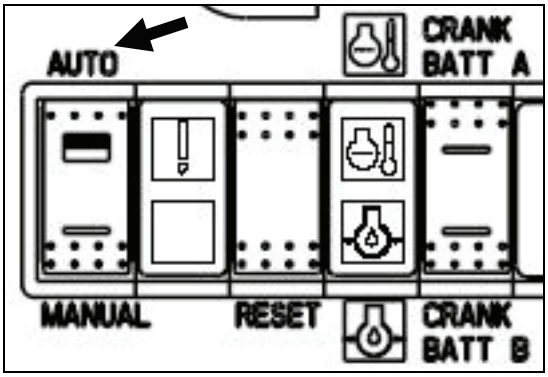

This Page Intentionally Left Blank

Exhaust Manifold Removal/Installation

Prepare

Remove the heat shield. Refer to instructions in this section.

Remove the air intake piping from the turbocharger. Refer to instructions in this section.

Remove the air outlet piping from the turbocharger. Refer to instructions in this section.

Remove the exhaust outlet piping from the turbocharger. Refer to instructions in this section.

Remove the turbocharger. Refer to instructions in this section.

Remove

Refer to Exhaust Manifold, Dry (40-011-007-tr) in B3.9, B4.5, and B5.9 Series Engines Troubleshooting and Repair Manual, Bulletin No. 3666087.

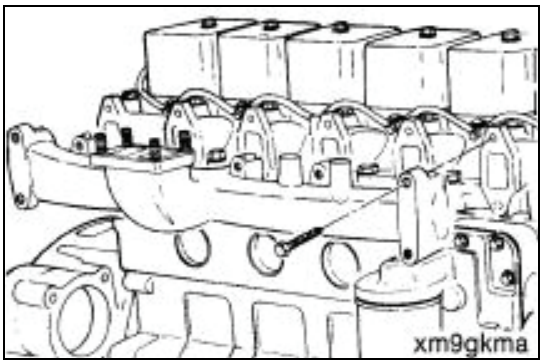

Clean

Refer to Exhaust Manifold, Dry (40-011-007-tr) in B3.9, B4.5, and B5.9 Series Engines Troubleshooting and Repair Manual, Bulletin No. 3666087.

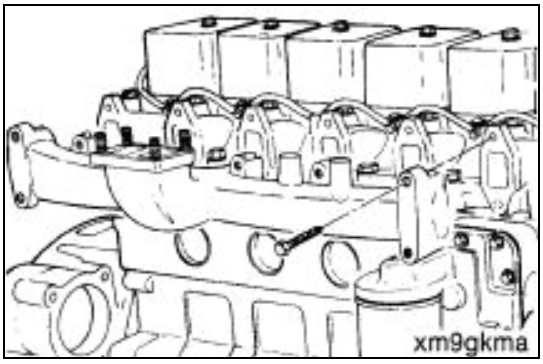

Exhaust Manifold Removal/Installation (Cont)

Install

Refer to Exhaust Manifold, Dry (40-011-007-tr) in B3.9, B4.5, and B5.9 Series Engines Troubleshooting and Repair Manual, Bulletin No. 3666087.

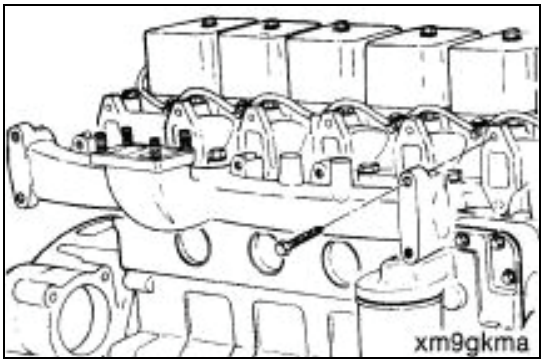

Follow-Up

Install the turbocharger. Refer to instructions in this section.

Install the exhaust outlet piping at the turbocharger. Refer to instructions in this section.

Install the air outlet piping at the turbocharger. Refer to instructions in this section.

Install the air intake piping at the turbocharger. Refer to instructions in this section.

Install the heat shield. Refer to instructions in this section.

Exhaust Restriction Measurement

Measure

NOTE: The maximum acceptable exhaust restriction is listed in Exhaust System Specifications in Section 10.

NOTE: A new pressure tap in the customer-supplied exhaust piping may be required.

Install pressure gauge, Cummins Part Number ST-1273, in the exhaust piping at the connection to the fire pump.

Operate the engine at rated speed and load. Refer to Normal Local Starting Procedure in Section 3.

Observe the exhaust restriction.

Stop the engine. Refer to Normal Local Starting Procedure in Section 3.

Remove the pressure gauge and plug the pressure tap.

If the backpressure exceeds specification, modify the exhaust piping accordingly.

Exhaust Shield Removal/Installation

Prepare

Place the fire protection system in a safe mode for engine service.

Place the AUTO/MANUAL rocker switch in the MANUAL position.

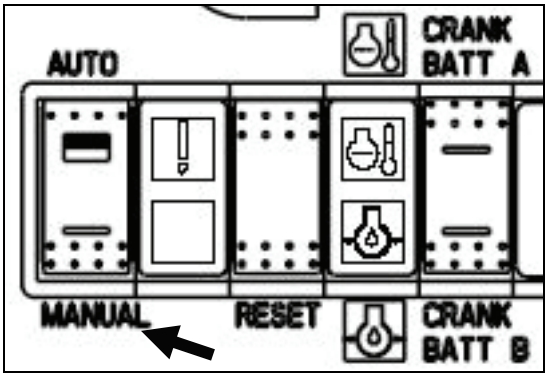

REMOVE BATTERY POWER BEFORE SERVICING ENGINE OR CONTROLS.

For safety reasons, both batteries must be disconnected before performing service on the Firepump Engine or on any of its controls. Before disconnecting the batteries, place the Firepump Controller in its appropriate service position in order to avoid a “Battery Failure” alarm.

Wear safety glasses when disconnecting batteries!

Next, disconnect both batteries at their terminals.

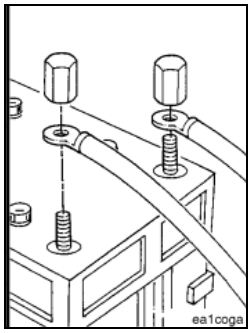

Remove

Remove the exhaust shield and fasteners. Refer to Drawing 8694 in Section 13.

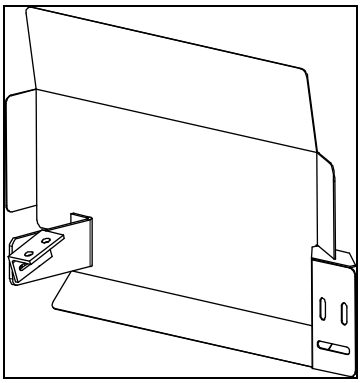

Exhaust Shield Removal/Installation (Cont)

Install

Install the exhaust shield and fasteners. Refer to Drawing 8694 in Section 13.

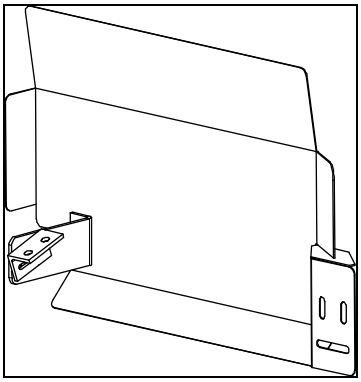

For safety reasons, both batteries must be re-connected before putting the engine and fire protection system controller back in service.

Wear safety glasses when reconnecting batteries!

Reconnect the batteries at their terminals after all service work has been completed.

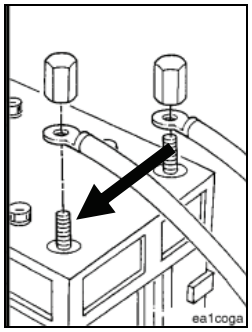

If functional components were removed, repaired, or replaced, perform the appropriate installation checks and engine starts as listed in Section 3. Verify that the components operate properly.

If testing is completed, place the AUTO/MANUAL rocker switch in the AUTO position.

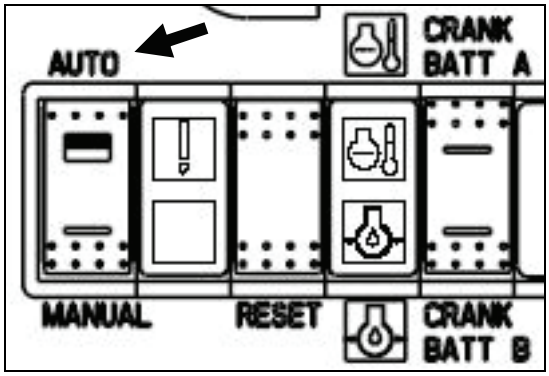

This Page Intentionally Left Blank

Rotary Fuel Injection Pump Removal/Installation

Refer to Fuel Injection Pump, Rotary (40-005-014-tr) in B3.9, B4.5, and B5.9 Series Engines Troubleshooting and Repair Manual, Bulletin No. 3666087.

Prepare

Remove all fuel lines.

Remove control linkage.

Remove fuel shutoff solenoid.

Remove high-pressure line, supply line, and return line. Remove the AFC air line, oil line(s), fuel shutoff solenoid, and all fuel lines.

CAUTION

A diesel engine can not tolerate dirt or water in the fuel system. A tiny piece of dirt or a few drops of water in the injection system can stop the engine.

Clean all external surfaces of the injection pump, including all line connections and fittings that are to be disconnected. Clean the area around the injection pump gear cover to prevent dirt from entering the crankcase.

Remove

CAUTION

To prevent damage to the timing pin, be sure to disengage the pin after locating top dead center.

Locate top dead center for cylinder No. 1. Push the top dead center pin into the hole in the camshaft gear while slowly barring the engine.

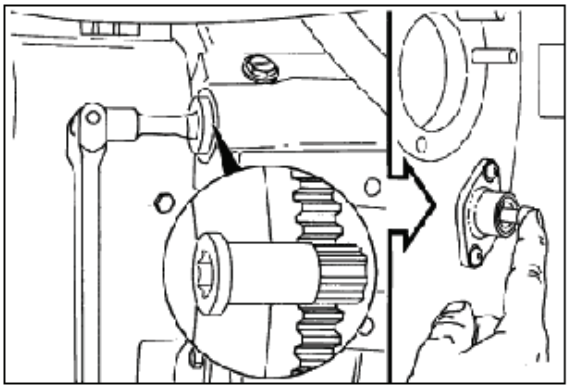

Rotary Fuel Injection Pump Removal/Installation (Cont)

Tighten the lock screw against the driveshaft.

Torque Value: 7 N•m [62 in-lb]

Tighten the lock screw until contact is made with the fuel injection pump driveshaft.

Torque Value: 12 N•m [106 in-lb]

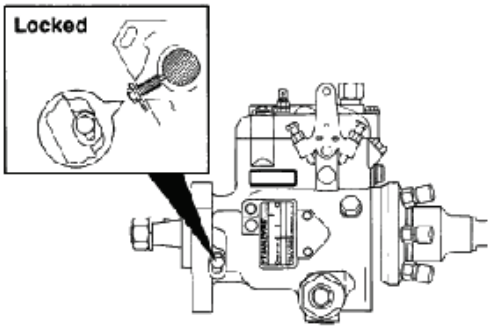

The special washer on the Bosch® injection pump must be removed so the lock screw can be tightened against the driveshaft.

Tighten the lock screw.

Torque Value: 30 N•m [22 ft-lb]

Remove the gear cover access cap.

Remove the nut and washer from the fuel pump shaft.

Pull the fuel pump drive gear loose from the shaft.

CAUTION

Do not remove the control lever. The lever is indexed to the shaft during pump calibration. Removal of the lever will alter the fuel pump calibration and affect engine performance.

Rotary Fuel Injection Pump Removal/Installation (Cont)

NOTE: Do not drop the drive gear key when removing the pump.

Remove the three mounting nuts.

Remove the fuel pump.

Install



Make sure the engine has cylinder No. 1 at top dead center.

The keyway in the shaft of new reconditioned pumps will be locked in a position corresponding to the keyway in the drive gear when cylinder No. 1 is at top dead center on the compression stroke.

After verifying that cylinder No. 1 is at top dead center, install the pump. Make sure the key does not fall into the gear housing.

Attach the pump by finger-tightening the three mounting nuts. The pump must be free to move in the slots.

Attach the pump driveshaft nut and spring washer. The pump can rotate slightly due to gear helix and clearance. This is acceptable provided the pump is free to move on the flange slots and the crankshaft does not move.

NOTE: Do not over tighten. This is not the final torque.

Torque Value: 15 to 20 N•m [133 to 177 in-lb]

CAUTION

The pump shaft must be unlocked after installation to prevent pump damage.

If reinstalling the removed pump, install the pump onto the engine. Rotate the pump to align the scribe marks. Tighten the three mounting nuts.

Torque Value: 24 N•m [18 ft-lb]

Rotary Fuel Injection Pump Removal/Installation (Cont)

If installing a new or rebuilt pump without scribe marks, take up the gear lash by rotating the pump against the direction of drive rotation.

Tighten pump retaining nuts.

Torque Value: 24 N•m [18 ft-lb]

If a new or rebuilt pump is being installed, permanently mark the injection pump flange to match the mark on the gear housing.

Loosen the CAV pump lock screw, and position the special washer behind the lock screw head.

Tighten the pump lock screw.

Torque Value: 20 N•m [15 ft-lb]

Loosen the Stanadyne DB4 fuel injection pump lock screw, and position the special washer behind the lock screw.

Tighten the lock screw.

NOTE: On the Bosch® pump, the special washer is wired to the pump and must be installed under the lock screw.

Tighten the pump lock screw.

Torque Value: 13 N•m [115 in-lb]

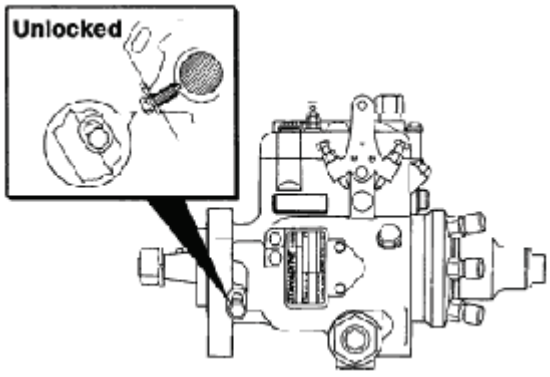

NOTE: Be sure to disengage the timing pin.

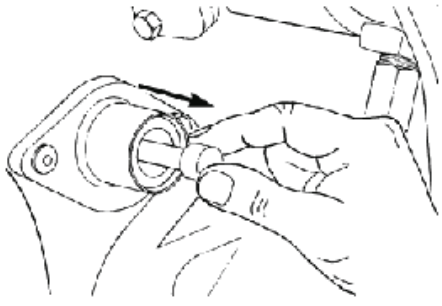

Rotary Fuel Injection Pump Removal/Installation (Cont)

Install the injection pump support bracket. Finger-tighten all capscrews before final tightening.

Tighten the capscrews.

Torque Value: 24 N•m [18 ft-lb]

NOTE: Tighten the bracket-to-block mounting capscrews (1) before tightening the bracket-to-injection-pump capscrew (2).

Tighten the drive gear mounting nut.

- **Torque Values:**
- **Bosch® 65 N•m [48 ft-lb]**
- **Stanadyne 65 N•m [48 ft-lb]**

Install the access cap.

Install the solenoid wiring and all fuel lines.

NOTE: When connecting the cable/rod to the control lever, adjust the length so the lever has stop-to-stop movement.

NOTE: Similarly, adjust the length of the cable/rod to the mechanical shutdown lever so there is a stop-to-stop movement.

Bleed all air from the fuel system.

If necessary, adjust the idle speed.

Follow-Up

Fuel Pump High Idle Speed

Refer to Fuel Pump High Idle Speed (40-005-028) in B3.9, B4.5, and B5.9 Series Engines Troubleshooting and Repair Manual, Bulletin No. 3666087.

Adjust

Idle Speed Adjustment, RQVK Governor

Idle adjustment for the RQVK governor requires setting of the idle adjustment screw.

Loosen the locknut and turn the screw counterclockwise to raise the rpm; clockwise to decrease idle speed until the dataplate-specified idle speed is attained with normal idle operation accessory loads. Tighten the lock screw.

RSV Governor

Idle adjustment for industrial engines requires the setting of both the low-idle screw (1) and the bumper spring screw (2).

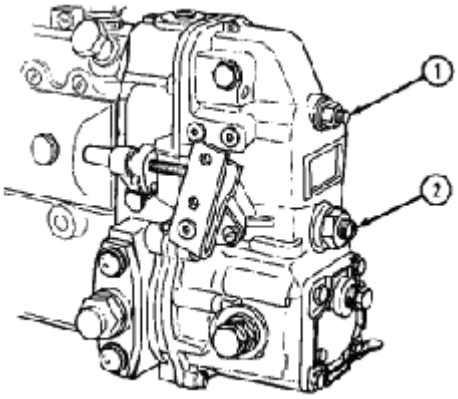

Fuel Pump Idle Speed

Refer to Fuel Pump Idle Speed (40-005-029) in B3.9, B4.5, and B5.9 Series Engines Troubleshooting and Repair Manual, Bulletin No. 3666087.

Adjust

Idle Speed Adjustment, RQVK Governor

Idle adjustment for the RQVK governor requires setting of the idle adjustment screw.

Loosen the locknut and turn the screw counterclockwise to raise the rpm; clockwise to decrease idle speed until the dataplate-specified idle speed is attained with normal idle operation accessory loads. Tighten the lock screw.

RSV Governor

Idle adjustment for industrial engines requires the setting of both the low-idle screw (1) and the bumper spring screw (2).

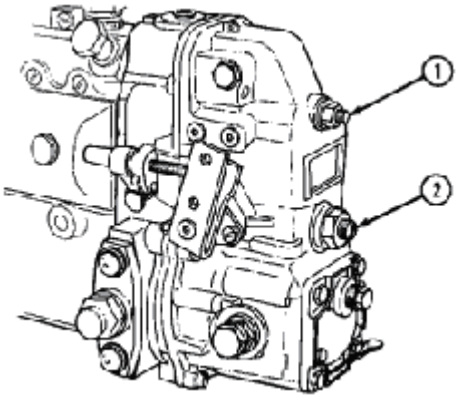

Fuel Pump Timing

Refer to Fuel Pump Timing (40-005-037) in B3.9, B4.5, and B5.9 Series Engines Troubleshooting and Repair Manual, Bulletin No. 3666087.

Adjust

Idle Speed Adjustment, RQVK Governor

Idle adjustment for the RQVK governor requires setting of the idle adjustment screw.

Loosen the locknut and turn the screw counterclockwise to raise the rpm; clockwise to decrease idle speed until the dataplate-specified idle speed is attained with normal idle operation accessory loads. Tighten the lock screw.

RSV Governor

Idle adjustment for industrial engines requires the setting of both the low-idle screw (1) and the bumper spring screw (2).

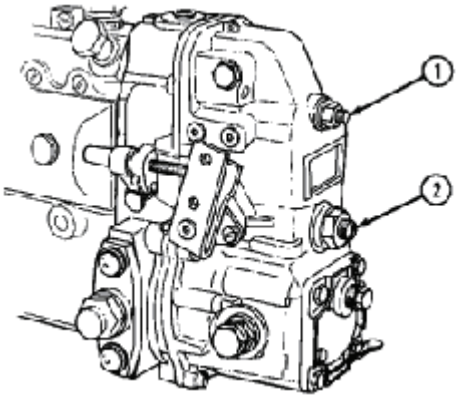

Fuel Shutoff Valve Removal/Installation

Refer to Fuel Shutoff Valve (40-005-043) in B3.9, B4.5, and B5.9 Series Engines Troubleshooting and Repair Manual, Bulletin No. 3666087.

Prepare

Label and disconnect wiring.

Remove

Remove the electrical wiring.

Remove the fuel drain line.

Remove the throttle shutoff linkage.

Remove the fuel injection pump top cover.

Disassemble the fuel injection pump top cover.

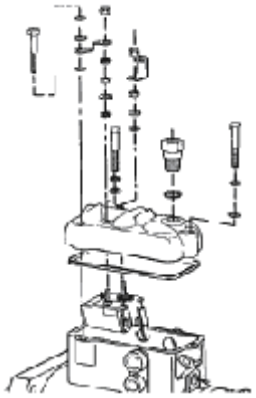

Clean Rotary Pumps

Clean around the valve.

Remove the valve.

NOTE: Be careful not to drop the piston and spring when removing the valve.

Replace the valve and connect the electrical wire.

Torque Value: 43 N•m [32 ft-lb]

Fuel Shutoff Valve Removal/Installation (Cont)

Install

Install new insulating tubes onto the terminals on the terminal studs of the new solenoid.

Install the valve into the cover.

Torque Value: 14 N•m [124 in-lb]

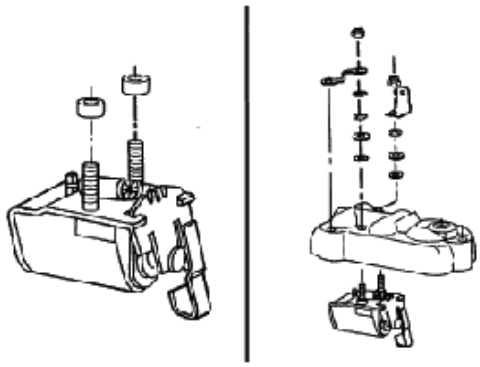

Install the cover and gasket onto the fuel injection pump.

NOTE: Extreme care must be taken in assembling the cover to the fuel injection pump to make sure the shutoff arm is in proper contact with the linkage hook tab.

Install the cover to the pump at a downward angle from the driveshaft end of the fuel injection pump; then slide the cover horizontally into position.

Torque Value: 5 N•m [44 in-lb]

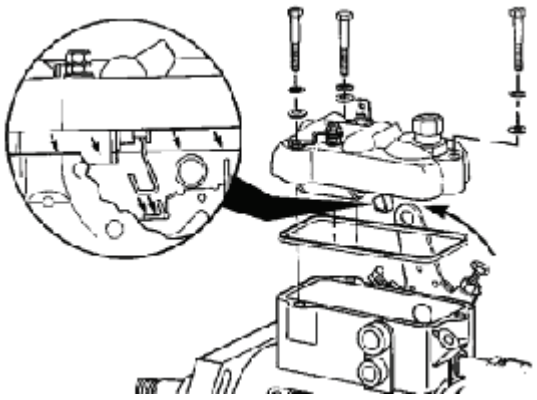

Inline Pumps

RQVK Governor Shutoff Solenoid

Remove the hitch pin clip, mounting capscrews, and the fuel shutoff solenoid.

Install the new solenoid in reverse order of removal and connect the wires. Make sure the part number and cable tie block is facing away from the engine.

Torque Value: 10 N•m [89 in-lb]

Adjust the solenoid linkage as necessary so that the plunger is magnetically held in with the shutoff lever in the absolute full-run position. Turn the large hex on the end of the plunger to make adjustments.

Follow-Up

Fuel Lift Pump Removal/Installation

Refer to Fuel Lift Pump (40-005-045) in B3.9, B4.5, and B5.9 Series Engines Troubleshooting and Repair Manual, Bulletin No. 3666087.

Prepare

Clean debris from around the lift pump.

Disconnect the fuel supply lines.

Clean Piston Style

Clean the mounting surface on the cylinder block.

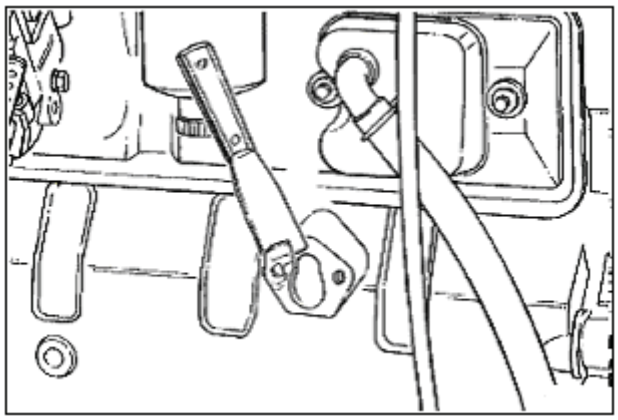

Clean Diaphragm Style

Remove the lift pump.

Clean the mounting surface on the cylinder block.

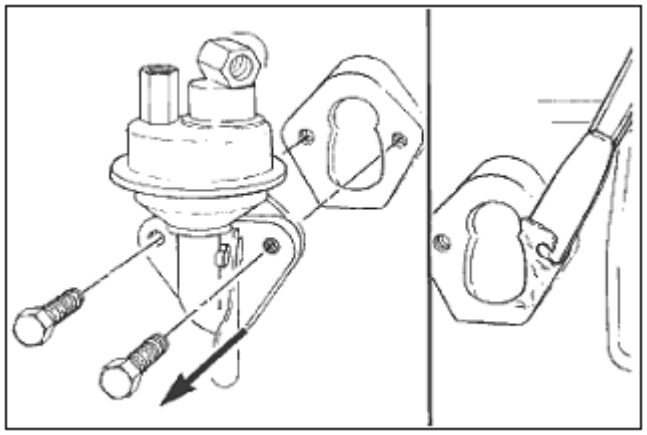

Fuel Lift Pump Removal/Installation (Cont)

Install Diaphragm Style

Install the lift pump and a new gasket.

Torque Value: 24 N•m [18 ft-lb]

Connect the fuel lines.

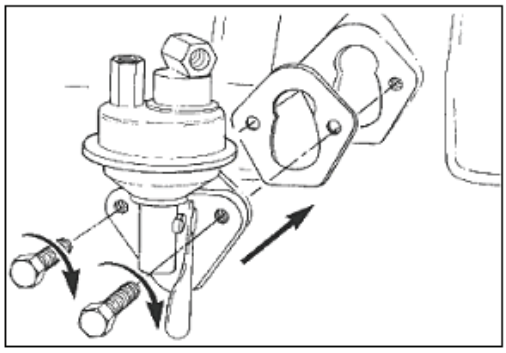

CAUTION

Alternately tighten the mounting capscrews. As the capscrews are tightened, the fuel transfer pump plunger is pushed into the pump. Failure to tighten the capscrews evenly can result in the plunger being bent or broken.

Install Piston Style

Install the pump.

Torque Value: 24 N•m [18 ft-lb]

Connect the fuel lines.

Air in Fuel

Refer to Air in Fuel (40-006-003-tr) in B3.9, B4.5, and B5.9 Series Engines Troubleshooting and Repair Manual, Bulletin No. 3666087.

General Information

WARNING

Fuel is flammable. Keep all cigarettes, flames, pilot lights, arcing equipment, and switches out of the work area and areas sharing ventilation to reduce the possibility of severe personal injury or death when working on the fuel system.

WARNING

Do not vent the fuel system on a hot engine; this can cause fuel to spill onto a hot exhaust manifold, which can cause a fire.

The low-pressure fuel system for a Cummins engine consists of the fuel tank, lines between tank and engine, transfer pump and lines, and fuel filter and lines. Air or bubbles at the injection pump can cause no or erratic engine operation and/or subsequent malfunction of the fuel injection pump. Air can be introduced by leaks in the fuel system prior to the transfer pump since fuel pressure is a vacuum. Bubbles can result from any number of restrictions in the system:

Plugged fuel filter

Crimped fuel line

Stopped-up tank module

Inoperative transfer pump

If sufficient fuel reaches the injection pump from the low-pressure system, then solutions to engine operational problems are elsewhere. The following steps will aid in evaluating low-pressure fuel system performance in absence of fault codes.

NOTE: For cold-start/performance problems, perform the following steps:

Leave engine outside in cold environment for at least 12 hours.

Perform outlined test.

If the system fails to meet test criteria, replace the fuel lift pump.

Test

NOTE: A replacement of fuel supply lines, fuel filters, fuel injection pump, high-pressure fuel lines, and injectors will let air enter the fuel system. Air in the system will make the engine hard to start, run rough, misfire, produce low power, and can cause excessive smoke and a fuel knock.



Air in Fuel (Cont)

NOTE: Since the fuel lift pump provides positive pressure through the fuel filter and supply line to the fuel injection pump, loose connections or defective seals can show as a fuel leak, not as an air leak.

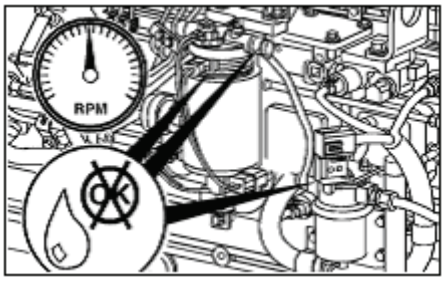

NOTE: If an excessive amount of air has entered into the system, the system will need to be vented.

Loosen the return banjo fitting on the fuel lift pump.

Run the fuel lift pump until all the air has been vented.

When all the air has been vented, retighten the fitting.

NOTE: To run the fuel pump for 25 seconds, crank the engine for a split second, and leave the key in the ON position.

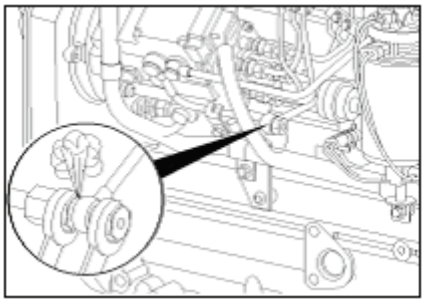

If air continues to bubble out of the system for several minutes, then an air leak is present.

NOTE: An often overlooked source from which air can enter the fuel system is between the inlet of the fuel transfer pump and the suction tube in the tank. Fuel tanks that have the outlet fitting at the top will have a suction tube that extends to the bottom of the tank. Cracks or pin holes in the weld that join the tube to the fitting can let air enter the fuel system.

Also, check to make sure all the fittings from the fuel supply line on the tank to the inlet of the fuel transfer pump are tight.

Use a sight glass at the fuel lift pump inlet to check for air in the fuel supply lines.

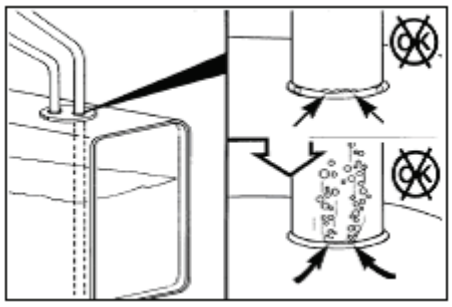

Air in Fuel (Cont)

NOTE: Since the fuel pump provides a positive pressure through the fuel filter and supply line to the fuel injection pump, loose connections or defective seals should show as a fuel leak, not as an air leak.

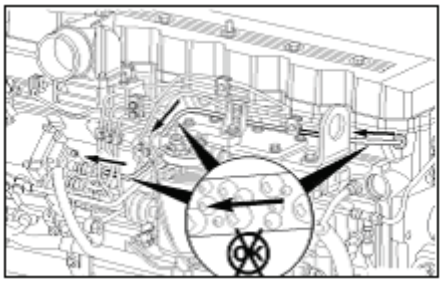

NOTE: A stuck-open injector can also blow combustion gas back into the pump and cause air to be present in the overflow.

If the engine seems to be misfiring or running rough, break all the injector supply lines loose at the pump end.

Crank the engine, and observe the lines.

If combustion gas seems to be blowing back through the line, the injector is stuck open.

Remove the injector.

Take the engine to an Authorized Cummins Repair Facility/Dealer Location for testing.

Torque Value: 24 N•m [212 in-lb]

NOTE: Use two wrenches when loosening the lines at the fuel pump: One to hold the delivery valve and one to loosen the fuel line.

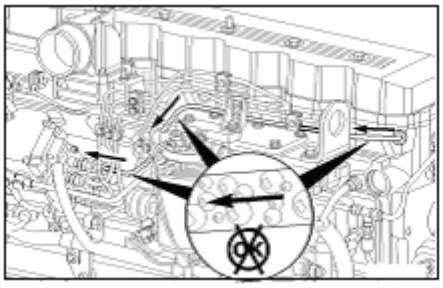

Disconnect the fuel line from the outlet of the fuel filter.

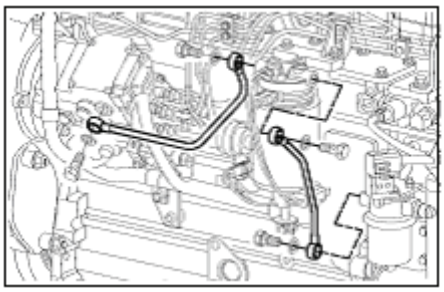

Air in Fuel (Cont)

Attach a preferably clear hose to the outlet of the fuel filter. (Do not use pressure test fitting.)

Place a pressure gauge on the inlet side of the fuel filter and a vacuum gauge on the inlet side to the transfer pump.

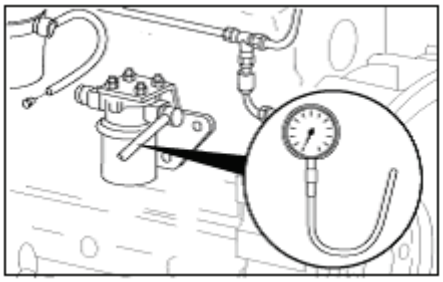

Insert a hose into an empty 3.8-liter [1-gal] container.

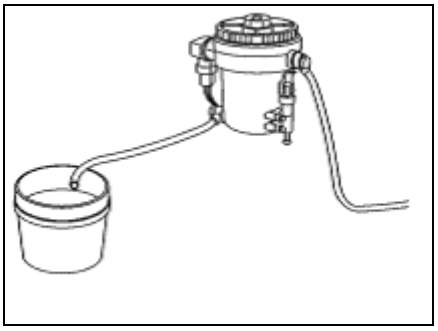

Operate the fuel lift pump by bumping the starter. (The lift pump should run for 25 to 30 seconds.)

Check for bubbles in fuel.

Record filter inlet pressure and transfer pump inlet restriction.

If filter inlet pressure is greater than 34.8 kPa [5 psi], the filter element must be replaced. Repeat test.

If inlet restriction is greater than 152.4 mm Hg [6 in Hg] or 155.1 mm Hg [3 psi], then excessive restriction exists between fuel in the tank and the transfer pump, which must be repaired (e.g., fuel line or tank module). Repeat test.

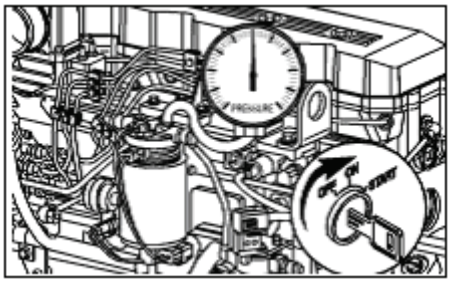

Air in Fuel (Cont)

If bubbles are present, check for air leaks in the fuel supply circuit.

Measure the amount of fuel in the container. If more than 1.33 liters [45 fl oz] are collected and the fuel is bubble-free, then it is unlikely the low-pressure fuel system is the cause of engine operational problems.

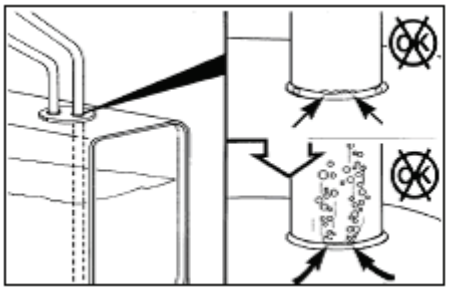

Reconnect the lift pump that is retaining the fuel filter pressure connections.

Running engine at high idle, the filter inlet pressure should be greater than 42.3 kPa [6 psi]; otherwise, there is a fuel lift pump malfunction.

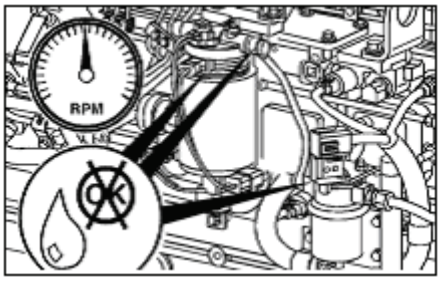

If the fuel transfer pump does not run, check electrical circuits, and verify voltage is present at lift pump connector.

NOTE: When an engine is not running, with switch on, the lift pump will run less than 2 seconds (varies with ECM calibration); with starter bump, about 25 to 30 seconds.

If voltage is present, replace fuel transfer pump.

Resistance measurement across the transfer pump terminals can be made for confirmation of pump malfunction.

Resistance greater than 200 ohms or less than 0.2 ohm does confirm an electrical fault when voltage is present but the fuel pump is not running.

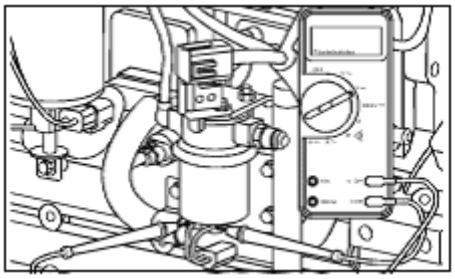

Fuel Drain Line Restriction

Prepare

Inline Pumps

NOTE: Use new seals and sealing washers.

Assemble the drain line and drain manifold in the reverse order of removal.

Torque Values:

(Banjo Fitting Screw) 15 N•m [133 in-lb]

(Banjo Fitting) 9 N•m [80 in-lb]

(Bracket Capscrew) 24 N•m [18 ft-lb]

Remove Rotary Pumps

Remove the capscrew from the hold-down clamp.

Remove the banjo fitting screws and washers.

Disconnect the drain line fitting from the injection pump.

Remove Inline Pumps

Remove the drain line banjo capscrew from the fuel filter head.

Remove the capscrew from the bracket on the intake cover.

Remove the banjo capscrews from the injectors.

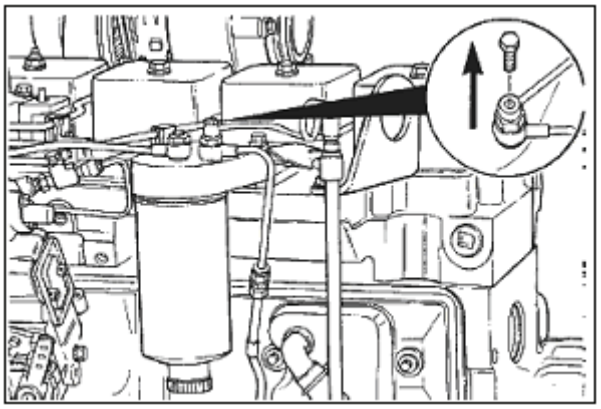

Install Rotary Pumps



NOTE: Use new seals and sealing washers.



Assemble the drain line and fuel drain manifold in the reverse order of removal.

Torque Values:

(Banjo Fitting Screw) 15 N•m [133 in-lb]

(Banjo Fitting) 9 N•m [80 in-lb]

(Clamp Screw) 24 N•m [18 ft-lb]

Install Inline Pumps

NOTE: Use new seals and sealing washers.

Assemble the drain line and drain manifold in the reverse order of removal.

Torque Values

(Banjo Fitting Screw) 15 N•m [133 in-lb]

(Banjo Fitting) 9 N•m [80 in-lb]

(Bracket Capscrew) 24 N•m [18 ft-lb]

Follow-Up

Fuel Filter Removal/Installation

Refer to Fuel Filter (Spin-On Type) (40-006-015-tr) in B3.9, B4.5, and B5.9 Series Engines Troubleshooting and Repair Manual, Bulletin No. 3666087.

Prepare

Drain

WARNING

Drain the fuel-water separator into a container, and dispose of contents in accordance with local environmental regulations.

Use the filter drain valve to drain fuel out of the filter for approximately 5 seconds. This will eliminate fuel from running over the top of the filter upon removal.

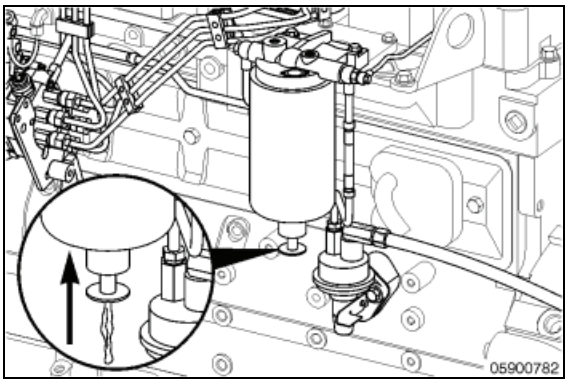

Remove

Clean the area around the fuel filter head.

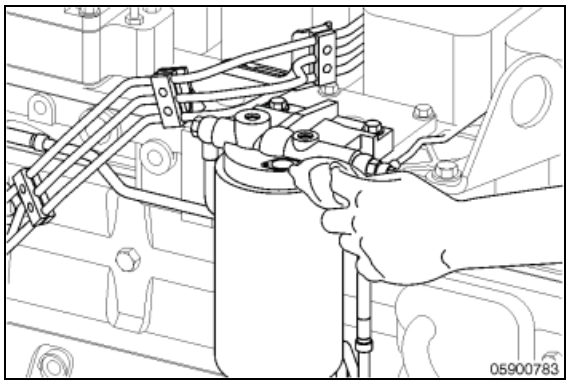

Remove the fuel filter.

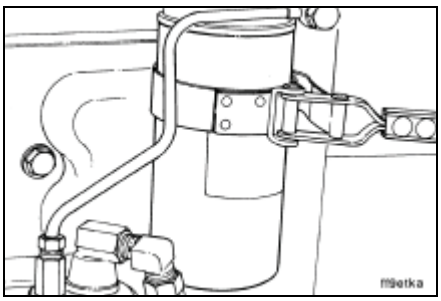

Fuel Filter Removal/Installation (Cont)

Install

Refer to Section V for fuel-water separator filter part number(s).

Lubricate the o-ring seal with clean lubricating oil.

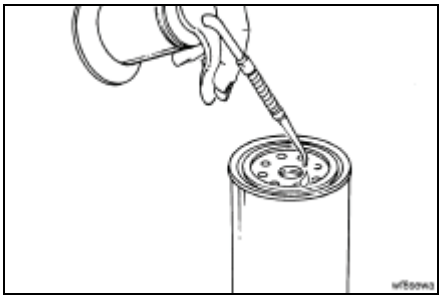

CAUTION

Mechanical over-tightening will distort threads, filter element seal, or filter can.

Install the filter as specified by the filter manufacturer.

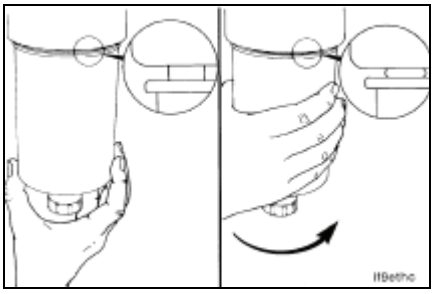

Prime

Controlled venting is provided at the injection pump through the fuel drain manifold. Small amounts of air introduced by changing the filters or injection pump supply line will be vented automatically if the fuel filter is changed in accordance with the instructions.

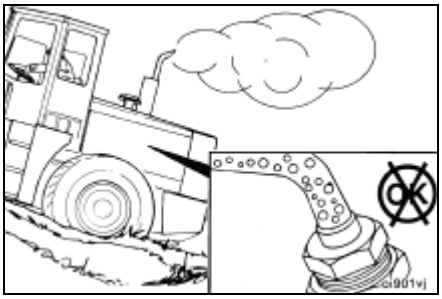

However, manual bleeding will be required if one of the following conditions exists:

The fuel filter is not filled prior to installation.

The fuel injection pump is replaced.

The high-pressure fuel line connections are loosened or the lines are replaced.

It is an initial engine start-up or start-up after an extended period of no engine operation.

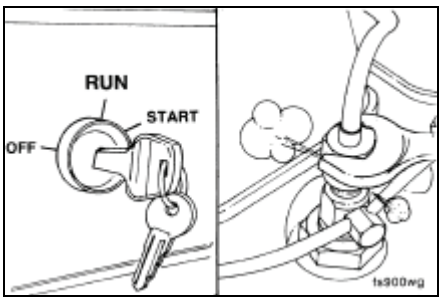

Fuel Filter Removal/Installation (Cont)

Open the bleed screw.

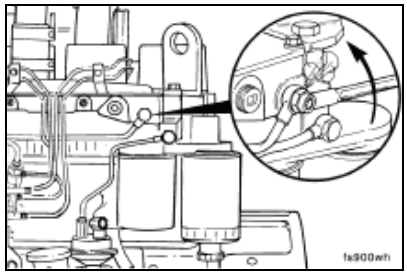

Operate the hand lever until the fuel flowing from the fitting is free of air.

Tighten the bleed screw.

Torque Value: 9 N•m [80 in-lb]

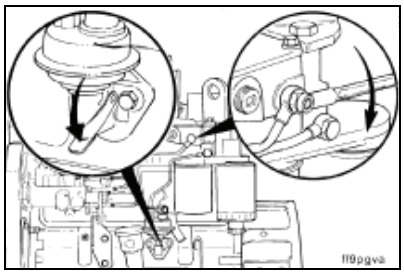

Air and fuel can be vented from the illustrated vent locations on the Bosch® VE fuel injection pumps.

Loosen the vent screw and operate the priming lever on the fuel transfer pump until the fuel injection pump is primed.

Tighten the vent screw.

Torque Value: 9 N•m [80 in-lb]

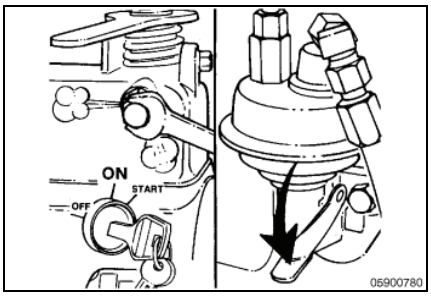

⚠CAUTION⚠

It is necessary to turn the keyswitch to the ON position. Because the engine can start, be sure to follow all safety precautions. Use the normal engine starting procedure.

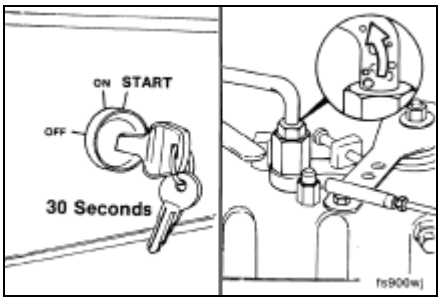

⚠CAUTION⚠

When using the starting motor to vent the system, do not engage it for more than 30 seconds, or starter damage will occur. Wait 2 minutes before starting the engine again.

Air can also be vented through the fuel drain manifold line by operating the starting motor.

Follow-Up

Measure Fuel Inlet Restriction

Prepare

Measure

Install a fitting at the transfer pump fuel inlet.

Install a vacuum gauge that has a range of at least 0 to 508 mm Hg [0 to 20 in Hg].

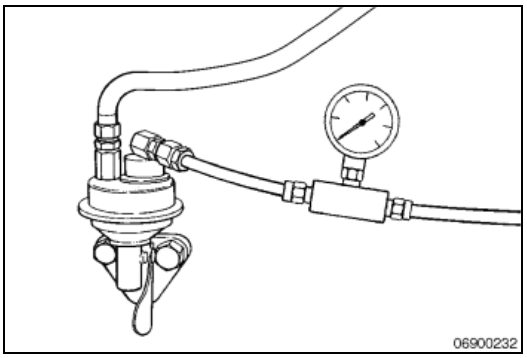

Start the engine, and run at low or high idle.

Maximum Allowable Inlet Restriction at Low/High Idle: 101.6 mm-hg [4.0 in-hg]

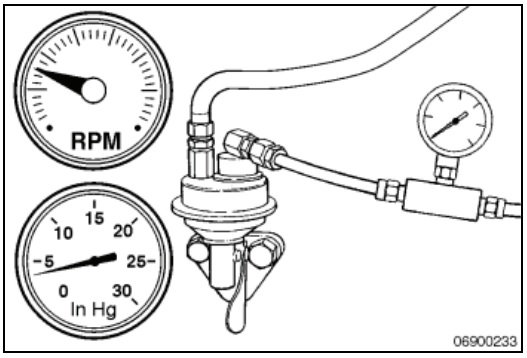

If the fuel inlet restriction is too high, check to make sure that the OEM lines from the tank are sized properly, there are no kinks or bends in the lines, and the lines are not clogged.

Make sure that there are no clogged fuel strainers or malfunctioning check valves.

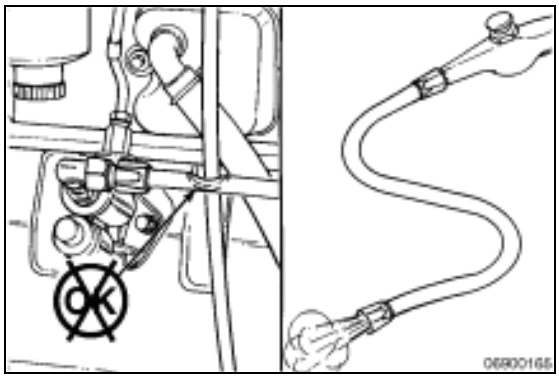

Follow-Up

Fuel Drain Manifold Removal/Installation

Refer to Fuel Manifold (Drain) (40-006-021) in B3.9, B4.5, and B5.9 Series Engines Troubleshooting and Repair Manual, Bulletin No. 3666087.

Prepare

Inline Pumps

NOTE: Use new seals and sealing washers.

Assemble the drain line and drain manifold in the reverse order of removal.

Torque Value:

(Banjo Fitting Screw) 15 N•m [133 in-lb]

(Banjo Fitting) 9 N•m [80 in-lb]

(Bracket Capscrew) 24 N•m [18 ft-lb]

Remove Rotary Pumps

Remove the capscrew from the hold-down clamp.

Remove the banjo fitting screws and washers.

Disconnect the drain line fitting from the injection pump.

Remove Inline Pumps

Remove the drain line banjo capscrew from the fuel filter head. Remove the capscrew from the bracket on the intake cover.

Remove the banjo capscrews from the injectors.

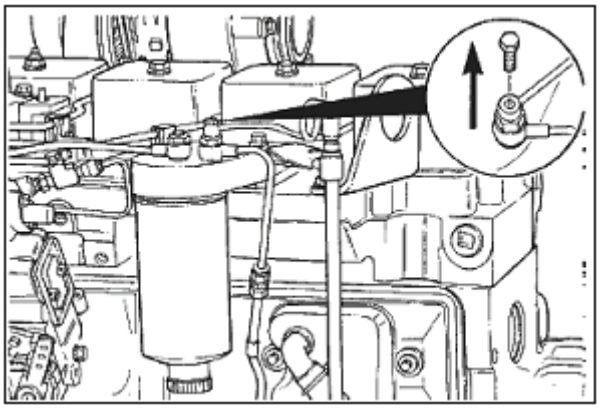

Fuel Drain Manifold Removal/Installation (Cont)

Install Rotary Pumps



NOTE: Use new seals and sealing washers.



Assemble the drain line and fuel drain manifold in the reverse order of removal.

Torque Values:

(Banjo Fitting Screw) 15 N•m [133 in-lb]

(Banjo Fitting) 9 N•m [80 in-lb]

(Clamp Screw) 24 N•m [18 ft-lb]

Install Inline Pumps

NOTE: Use new seals and sealing washers.

Assemble the drain line and drain manifold in the reverse order of removal.

Torque Values:

(Banjo Fitting Screw) 15 N•m [133 in-lb]

(Banjo Fitting) 9 N•m [80 in-lb]

(Bracket Capscrew) 24 N•m [18 ft-lb]

Follow-Up

Low Pressure Fuel Supply Lines Removal/Installation

Refer to Fuel Supply Lines (40-006-024) in B3.9, B4.5, and B5.9 Series Engines Troubleshooting and Repair Manual, Bulletin No. 3666087.

Prepare



Low Pressure Fuel Line

Thoroughly clean all fittings and components before removal.

Make sure that the debris, water, steam, or cleaning solution does not reach the inside of the fuel system.

Remove Diaphragm Style Lift Pump



Disconnect the fuel line from the lift pump and filter head. Use two wrenches to disconnect the line from the lift pump.

Remove Piston Style Lift Pump

Disconnect the fuel line from the lift pump and filter head. Use two wrenches to disconnect the line from the lift pump.

Install Diaphragm Style Lift Pump





Install the fuel line to the lift pump and filter head. Use two wrenches to tighten the connection to the lift pump.

Torque Value: 24 N•m [18 ft-lb]

NOTE: Do not overtighten the connection. Fuel leaks can result from over-tightening.

Install Piston Style Lift Pump

Install the fuel line to the lift pump and filter head. Use two wrenches to tighten the connection to the lift pump.

Torque Value: 24 N•m [18 ft-lb]

Low Pressure Fuel Supply Lines Removal/Installation (Cont)

Injection Pump Supply Line Replacement

Remove the bleed screw banjo fitting.

Remove the supply line (Bosch® injection pump).

NOTE: Replace the seals (1) in the fittings if the line is disassembled.

Remove the supply line (Lucas CAV injection pump). The Lucas CAV pump has two fittings for the supply line.

Replace fitting sealing washers (1), and ferrules (2) each time they are removed.

Torque Value: 32 N•m [24 ft-lb]

NOTE: Replace the seals in the fittings if the line is disassembled.

Engines rated at 2500 rpm and above require additional fuel line support. Install as illustrated.

Torque Value: 24 N•m [18 ft-lb]

Follow-Up

Fuel Injectors Removal/Installation

Refer to Injector (40-006-026) in B3.9, B4.5, and B5.9 Series Engines Troubleshooting and Repair Manual, Bulletin No. 3666087.

Prepare

Thoroughly clean around the injectors.

Disconnect the high-pressure fuel lines.

Disconnect the fuel drain manifold.

Remove



CAUTION

The injector must not rotate in the bore of the cylinder head. This will damage the cylinder head.

Remove the injectors.

NOTE: Hold the injector body with a 16-mm wrench while loosening the hold-down nut with a 24-mm end wrench.

Clean



Injector Bore Brush

Clean the injector nozzle bore.

Install



Remove the injector hold-down nut, and apply a coat of anti-seize compound to injector surface (A). Avoid getting anti-seize compound in the fuel drain hole (B).

Install the hold-down nut on the injector body.



Fuel Injectors Removal/Installation (Cont)

Install a new o-ring into the recessed groove on the top of the hold-down nut. Make sure the o-ring is not cut or twisted when installing (Bosch® and Stanadyne).



NOTE: CAV injectors retain the o-ring inside the hold-down nut.

Apply a light coat of anti-seize compound to the threads of the injector hold-down nut.

Assemble the injector and new copper washer.



Use only one copper washer.

NOTE: A light coat of clean lubricating engine oil between the washer and injector can help to keep the washer from falling during installation.



Install the injectors.



The protrusion on the side of the nozzle fits into a notch in the head to orient the injector.

Tighten the injector nozzle nuts.



Torque Value: 60 N•m [44 ft-lb]

Install the fuel drain manifold.



Torque Value: 9 N•m [80 in-lb]



Install the high-pressure fuel lines.



Torque Value: 24 N•m [18 ft-lb]



Follow-Up

Fuel-Water Separator Removal/Installation

Refer to Fuel-Water Separator (99-006-043) in B3.9, B4.5, and B5.9 Series Engines Troubleshooting and Repair Manual, Bulletin No. 3666087.

Prepare

Clean debris

Remove fuel filters.

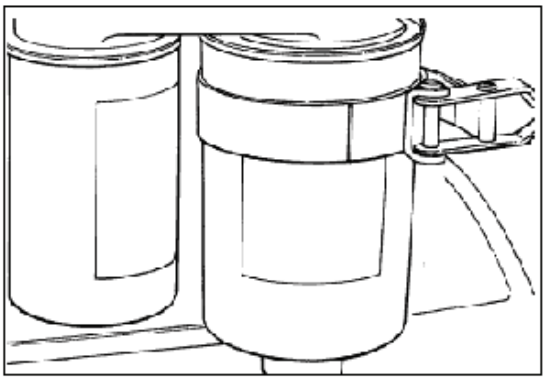

Remove

Remove the retaining nut, filter head adapter, and sealing washers.

Install in reverse order of removal.

Torque Value: 32 N•m [24 ft-lb]

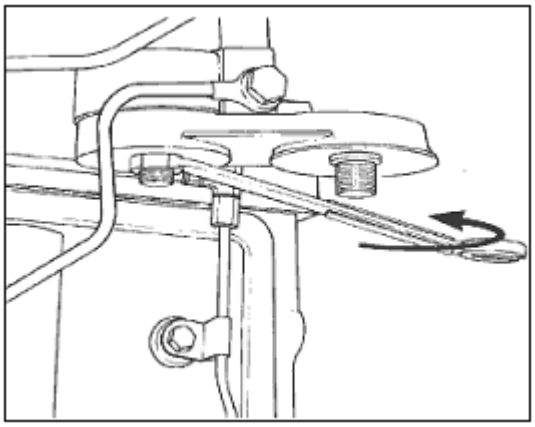

Install

Follow-Up

Fuel Return Overflow Valve Removal/Installation

Prepare

Remove

Remove, clean, and inspect the fuel return overflow valve for reuse. Refer to Fuel Return Overflow Valve (53-006-044) in ISB and QSB5.9 Base Engine Troubleshooting and Repair Manual, Bulletin Number 3666193.

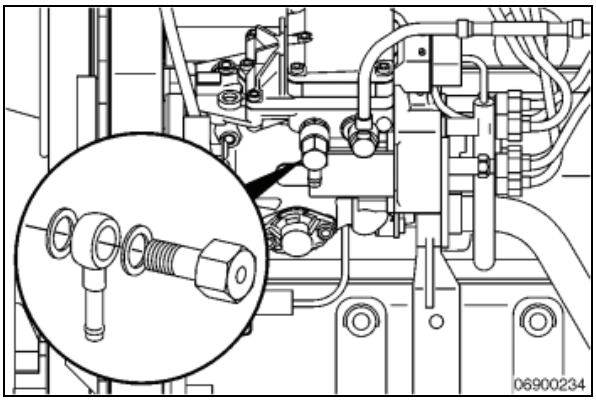

Remove

Remove the fuel return overflow valve and rubber-coated sealing washer.

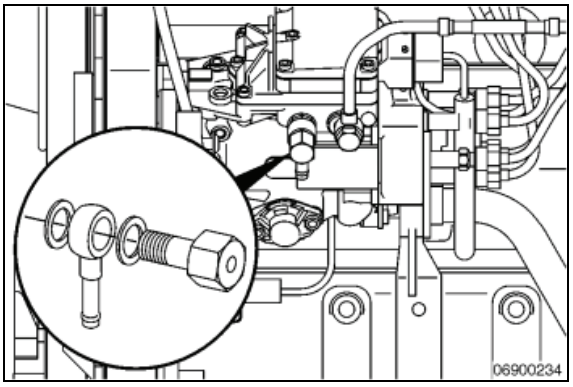

Fuel Return Overflow Valve Removal/Installation (Cont)

Clean

WARNING

When using solvents, acids, or alkaline materials for cleaning, follow the manufacturer's recommendations for use. Wear goggles and protective clothing to avoid personal injury.

Thoroughly flush the high-pressure relief valve with cleaning solution.



Inspect for Reuse

Use a small screwdriver to verify that the check ball is not sticking in the high-pressure relief valve assembly and that the spring is not broken.

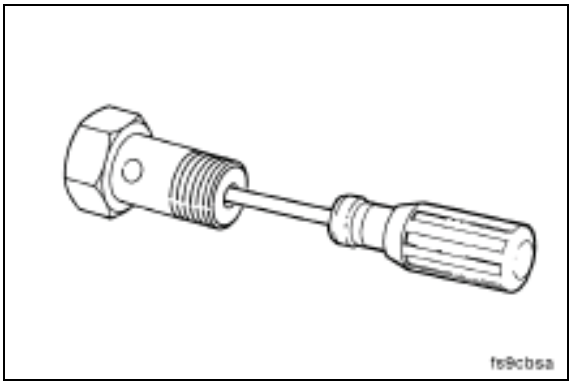

Install

Install new rubber-coated sealing washers and fuel return overflow valve.

NOTE: Use two wrenches when installing the overflow valve.

Torque Value: 24 N•m [18 ft-lb]

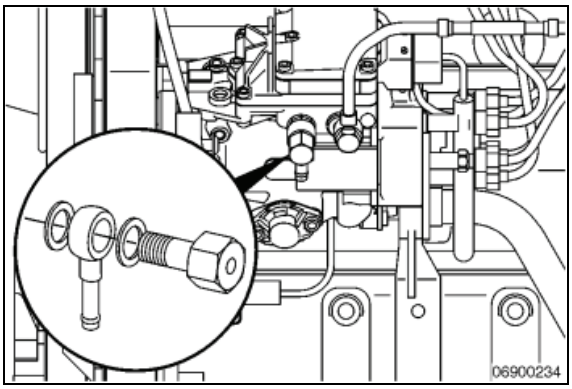

Fuel Return Overflow Valve Removal/Installation (Cont)

Install

Install the fuel return overflow valve. Refer to Fuel Return Overflow Valve (53-006-044) in ISB and QSB5.9 Base Engine Troubleshooting and Repair Manual, Bulletin Number 3666193.



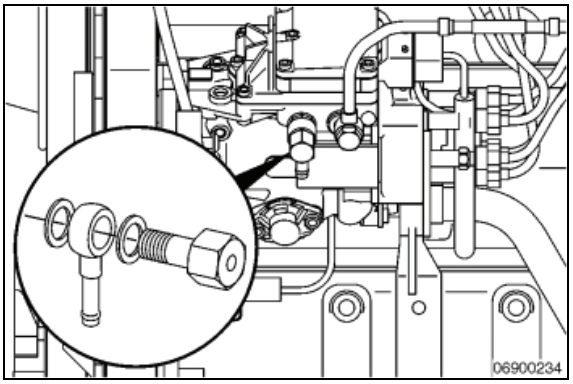

Follow-Up

High Pressure Injector Supply Lines Removal/Installation

Refer to Injector Supply Lines (High Pressure) (40-006-051) in B3.9, B4.5, and B5.9 Series Engines Troubleshooting and Repair Manual, Bulletin No. 3666087.

Prepare

Clean all debris from around the fittings.



Remove

Rotary Pumps

Disconnect the fuel line(s) from the injector.

NOTE: If individual lines are to be replaced, remove the support clamp from the set of lines containing the line to be replaced.



Disconnect the fuel line(s) from the fuel pump. Install protective covers onto the injectors and delivery valves to prevent entry of dirt into the system.



Inline Pumps

Disconnect the line(s) from the injector(s).

NOTE: If individual lines are to be replaced, remove the support clamp from the set of lines containing the line to be removed.

Disconnect the line(s) from the fuel pump.

High Pressure Injector Supply Lines Removal/Installation (Cont)

Install

CAUTION

Install the support clamp in the original position and, to prevent damage from high-frequency vibration, make sure the lines have not been bent or do not contact each other or another component.

CAUTION

To prevent damage to the fuel lines, they must be connected to the injectors and fuel injection pump in a free state without forcing the connecting nuts. The fuel lines are correctly sized for each application. Bending the lines is not acceptable and can cause fuel leaks.

Rotary Pumps

Install the fuel lines in reverse order of removal.



Torque Values:

(Line Fittings) 24 N•m [18 ft-lb]

(Support Clamp) 6 N•m [53 in-lb]

(Support Bracket) 24 N•m [18 ft-lb]

Inline Pumps

Install the lines in reverse order of removal.

Torque Values:

(Line Fittings) 24 N•m [18 ft-lb]

(Support Clamp) 6 N•m [52 in-lb]

(Support Bracket) 24 N•m [18 ft-lb]

NOTE: If removed, reinstall the support clamp in the original position, and make sure the lines do not contact each other or another component. Install a protective cover on the injectors and fuel delivery valves to prevent the entry of dirt into the system.

Follow-Up

Air Leaks, Air Intake and Exhaust Systems

Prepare

Initial Check



CAUTION

Engine intake air must be filtered to prevent dirt and debris from entering the engine. If intake air piping is damaged or loose, unfiltered air will enter the engine and cause premature wear.

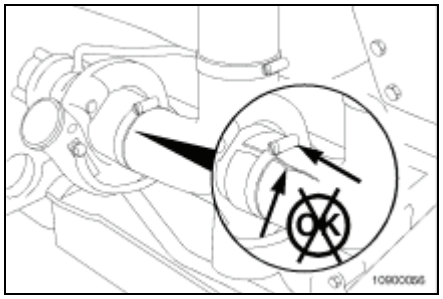

Inspect the intake air piping for cracked hoses, damage, or loose clamps.

Replace damaged pipes, and tighten loose clamps, as necessary, to make sure the air intake system does not leak.

Torque Value: 8 N•m [71 in-lb]

Check for corrosion of the intake system piping under the clamps and hoses. Corrosion can allow corrosive products and dirt to enter the intake system. Disassemble and clean, as required.

Operate the engine at high idle, and use a solution of soapy water to spot intake air leaks.



If an air leak exists, the soap bubbles will be drawn in with the air.

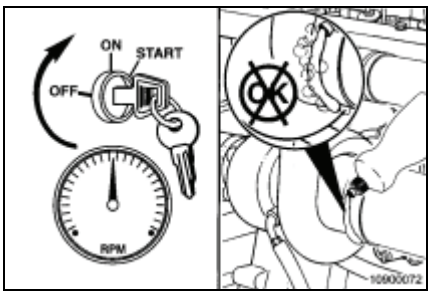

Air Leaks, Air Intake and Exhaust Systems (Cont)

Operate the engine at full throttle and rated rpm with maximum load.

Listen for a high-pitched whistling noise from the turbocharger, nearby piping, and connections.

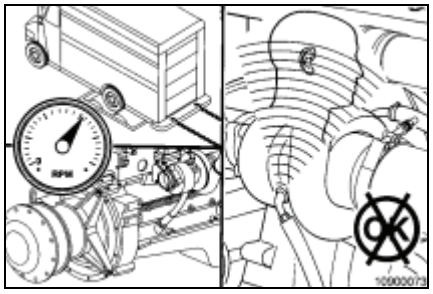

The noise can be caused by an air leak from the turbocharger-to-discharge elbow connection.

Inspect for damage. Tighten loose clamps.

Torque Value: 8 N•m [71 in-lb]

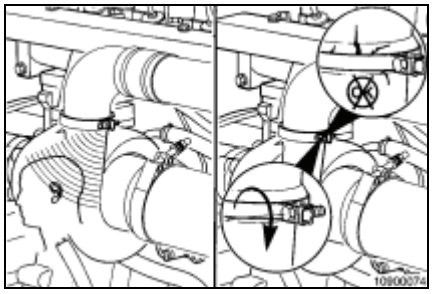

Any charge air cooler tubing or connecting hoses.

Inspect the hose and tubing for damage.

Tighten the hose clamps.

Refer to the manufacturer's specifications for the correct torque value.

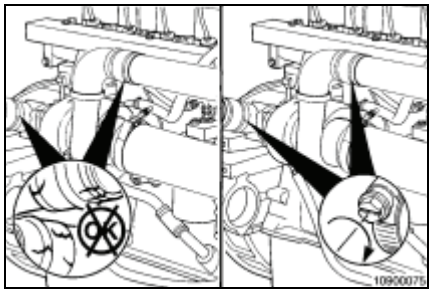

Turbocharger-to-exhaust-manifold mounting gasket.

Replace the gasket. Refer to Procedure 010-033.

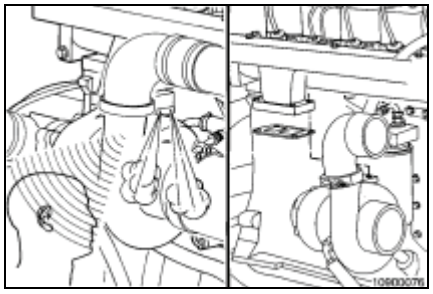

Air Leaks, Air Intake and Exhaust Systems (Cont)

Operate the engine at full throttle and rated rpm with maximum load.

Listen again for leaks.

Replace the turbocharger if the air piping is not damaged and the noise can still be heard. Refer to Procedure 010-033.

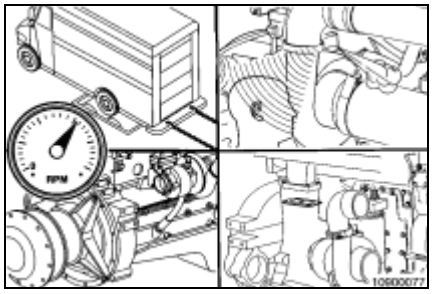

Loose connections or cracks in the suction side of the intake pipe and after the air filter can allow debris to be ingested by the engine, causing rapid wear in the cylinders.

Leaks at the intake manifold, unsealed bolt holes, or manifold cover gasket can also allow dust and dirt to be ingested into naturally aspirated engines.

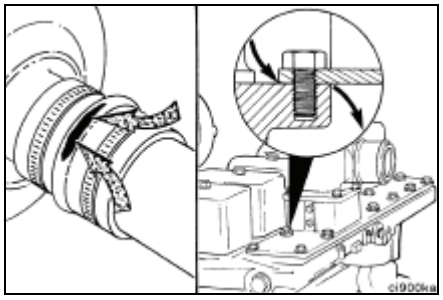

Debris drawn into the air suction side can damage the compressor blades, causing an imbalance resulting in bearing failure.

To verify a bearing failure or damaged compressor, remove the intake and exhaust piping, and check for contact. The rotor assembly must rotate freely and should not be damaged. Measurement of axial and radial clearance is described in this section.

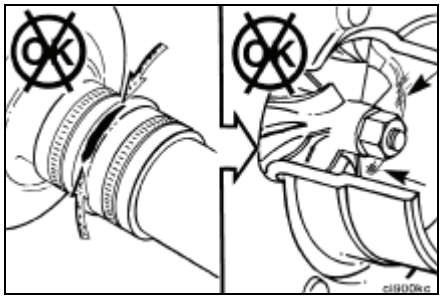

Excessive smoke and low power from a turbocharged engine can be caused by pressurized air leaking from loose connections or cracks in the crossover tube or intake manifold. This can also cause a noise problem.



Air Leaks, Air Intake and Exhaust Systems (Cont)

In addition to the inspection for cracks and loose fittings, liquid soap can be applied to the charge air cooler, connections, and the manifold cover sealing surfaces to find the leaks. The leaks will create bubbles that are easier to detect. Measurement of manifold pressure is described in this section.

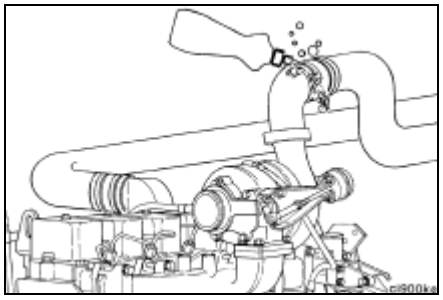

Follow-Up

Intake Air Cleaner Element Removal/Installation

CAUTION

Never operate the engine without an air cleaner. Unfiltered foreign objects could cause engine damage.

Check Air Restriction Indicator. Replace the air cleaner element when the restriction reaches the maximum allowable limit, or clean according to the manufacturer's recommendations. See Air Cleaner Restriction Removal/Installation in this section.

Turbocharged engines must be operated at rated RPM and full load to check maximum intake air restriction.

Maximum intake air restriction is 762 mm H2O [30.0 in H2O] for turbocharged engines.

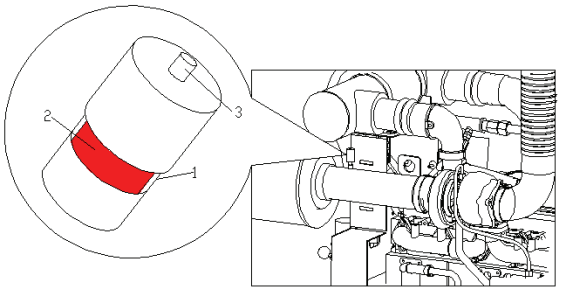

Loosen air cleaner clamp.

Remove the air cleaner element.

Clean and Inspect for Reuse

Inspect the air cleaner for cuts, cracks, holes, or excessive debris.

Clean or replace if necessary.

See Air Intake System Specifications in Section 10 for correct Cummins Fire Power replacement part number.

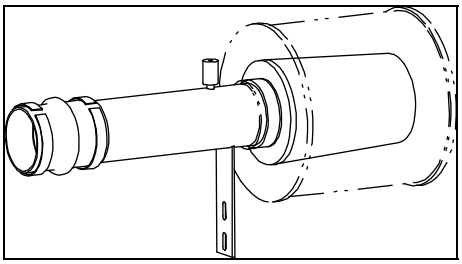

Check for corrosion of the intake system piping under the clamp. Corrosion can allow corrosive products and dirt to enter the intake system.

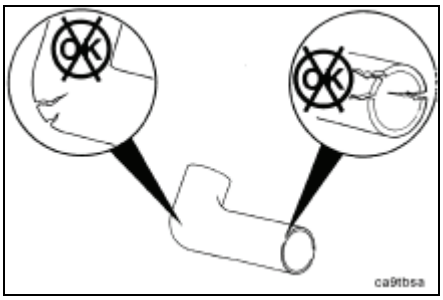

Intake Air Cleaner Element Removal/Installation (Cont)

Re-run engine at rated RPM at full load to check maximum intake restriction.

Maximum intake air restriction is 762 mm H2O [30.0 in H2O] for turbocharged engines.

Follow-Up

Air Intake Restriction Indicator Removal/Installation

A mechanical restriction indicator is available to indicate excessive air restriction through a dry-type air cleaner. This instrument is mounted on the air cleaner outlet tube.

Refer to Air Filter Assembly Drawing in Section 13.

Change the filter element when the red indicator flag (2) is at the raised position in the window (1). See Air Cleaner Element Removal/Installation in this section.

NOTE: Do not remove the felt washer from the indicator. The felt washer absorbs moisture**.**

After the air cleaner has been serviced, push the button (3) to reset the service indicator. If the indicator does not retract to the service position with new air cleaner element installed, the service indicator needs to be replaced.

Remove service indicator from Air Cleaner Element piping. Apply Teflon sealant to the threads on the indicator. Install new indicator on Intake pipe.

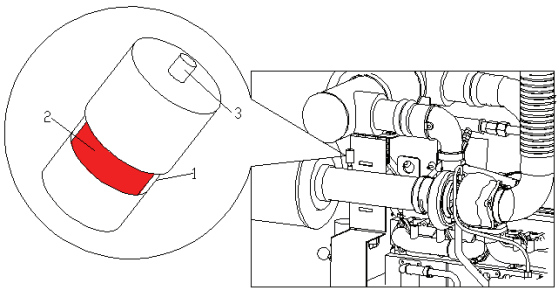

Follow-Up

Run engine to determine if new indicator is functioning.

Air Crossover Pipe Removal/Installation

Refer to Air Crossover (40-010-019-tr) in B3.9, B4.5, and B5.9 Series Engines Troubleshooting and Repair Manual, Bulletin No. 3666087.

Prepare

Remove

Loosen the hose clamps, and position the hose so the crossover tube can be removed.

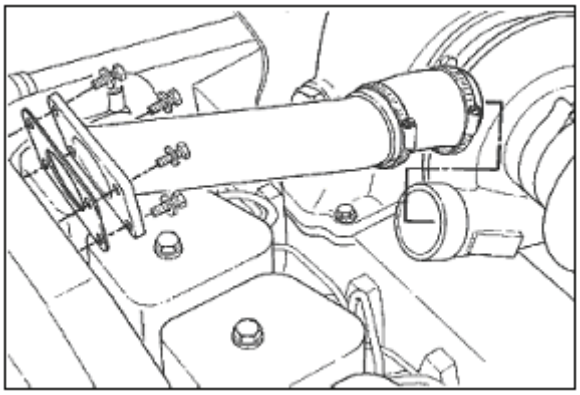

Install

Use new hose and clamps as required to install the crossover tube.

Torque Value: 8 N•m [71 in-lb]

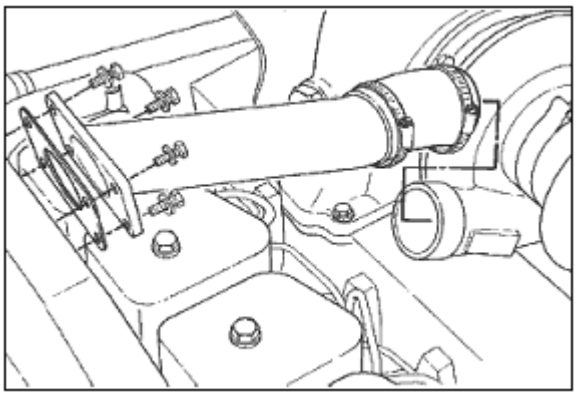

Follow-Up

Air Intake Manifold Removal/Installation

Refer to Air Intake Manifold (40-010-023-tr) in B3.9, B4.5, and B5.9 Series Engines Troubleshooting and Repair Manual, Bulletin No. 3666087.

Prepare

Remove the high-pressure fuel lines

Disconnect the cold starting aid, if used.

Remove the air crossover tube.

Remove



Remove the manifold cover and gasket.

NOTE: Plug the opening of the air intake with a clean shop rag to prevent foreign matter from entering combustion chamber.

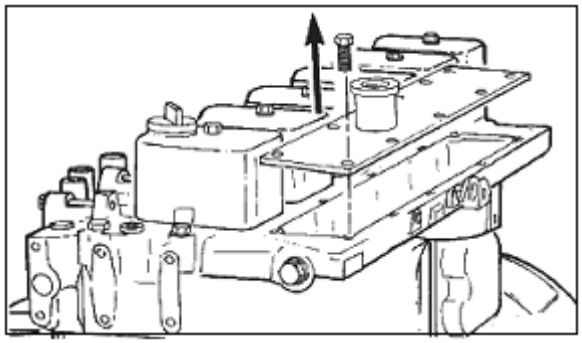

Clean



Clean the sealing surface.

NOTE: Keep the gasket material and any other material out of the air intake.

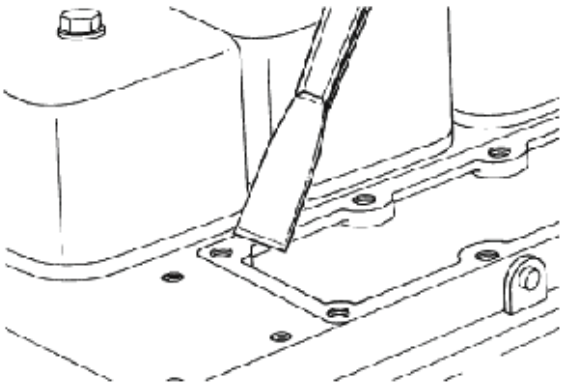

Air Intake Manifold Removal/Installation (Cont)

Install

NOTE: The holes shown in the illustration are drilled through and must be sealed by applying liquid Teflon™ sealant to the capscrews.

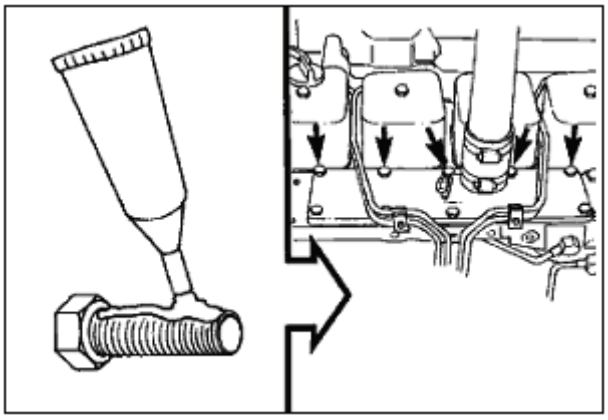

Install the cover and a new gasket.

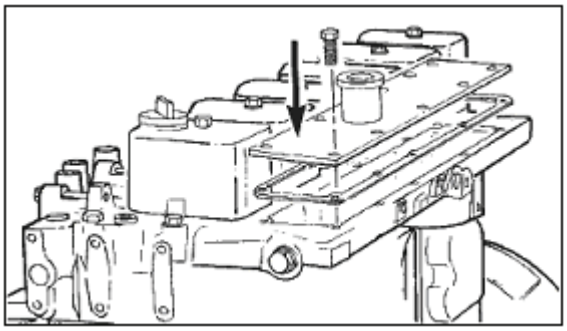

Torque Value: 24 N•m [18 ft-lb]

Assemble the intake piping, and connect the cold starting aid if used.

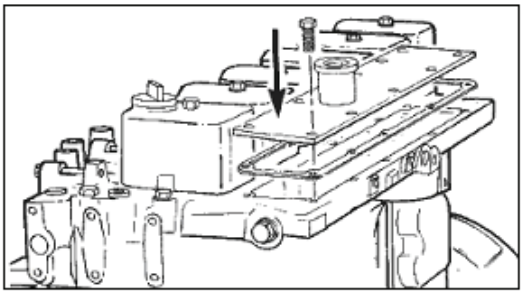

Air Intake Manifold Removal/Installation (Cont)

Pressure Test

Install the pressure gauge to the fitting in the turbocharger outlet.

Install another pressure gauge, in the intake manifold.

Operate the engine at rated rpm and load. Record the readings on the two gauges.

If the differential pressure is greater than 21 kPa [3 psi], Check the charge air cooler for plugging. Clean or replace if necessary.

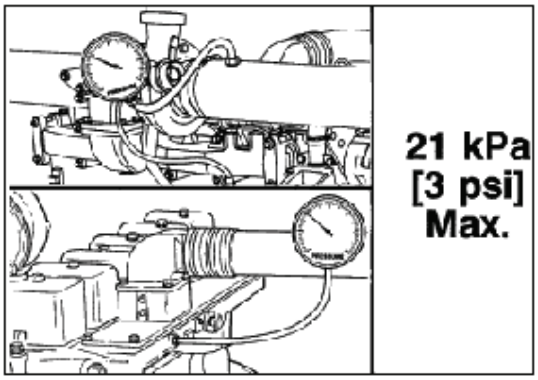

Temperature Differential Test

Install a temperature gauge in the intake manifold.

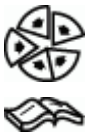

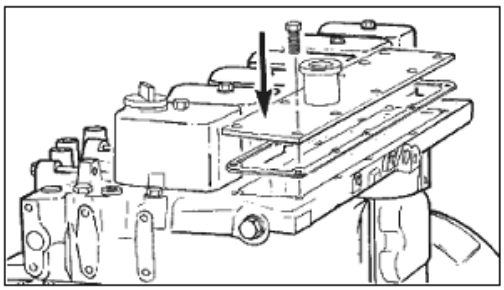

Lock the fan drive in the ON mode to prevent erratic test results.

Operate the engine at rate rpm and load. Record the intake manifold temperature.

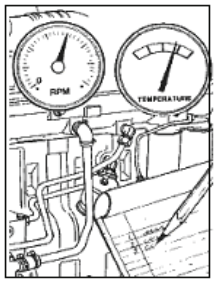

Measure the ambient temperature.

The maximum temperature differential must not be greater than 25°C [45°F].

If the temperature differential is greater than 25°C [45°F], check the charge air cooler for dirt and debris on the fins, and clean as necessary. If the problem still exists, check the cooler for internal contamination or plugging.

Air Intake Manifold Removal/Installation (Cont)

Vent



WARNING

Do not mix gasoline, alcohol, or gasohol with diesel fuel. This mixture can cause explosion.

Install and bleed the high-pressure fuel lines.

Follow-Up

Turbocharger Removal/Installation

Refer to Turbocharger (40-010-033-tr) in B3.9, B4.5, and B5.9 Series Engines Troubleshooting and Repair Manual, Bulletin No. 3666087.

Prepare

Remove the air crossover tube.

Disconnect the intake and exhaust piping.

Remove

Remove the capscrews from the oil drain tube.

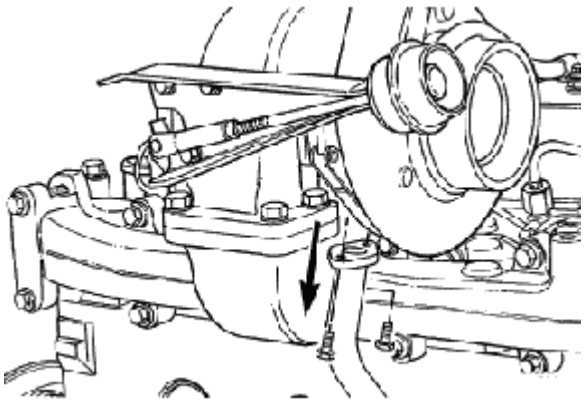

Remove the oil supply line.

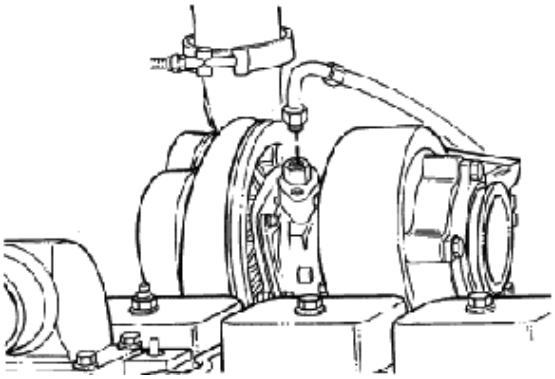

Turbocharger Removal/Installation (Cont)

If equipped with a wastegate turbocharger, remove the intake manifold pressure supply line from the boost capsule.

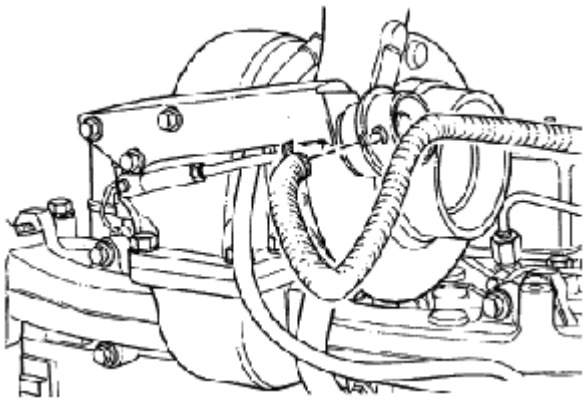

Remove the exhaust clamp, turbocharger, and gasket.

Plug the opening with a clean shop rag to prevent foreign material from entering exhaust system.

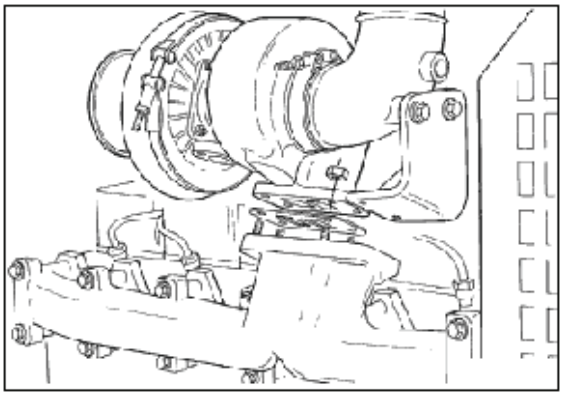

Clean

Clean the sealing surface. Inspect the sealing surface and mounting studs for damage.

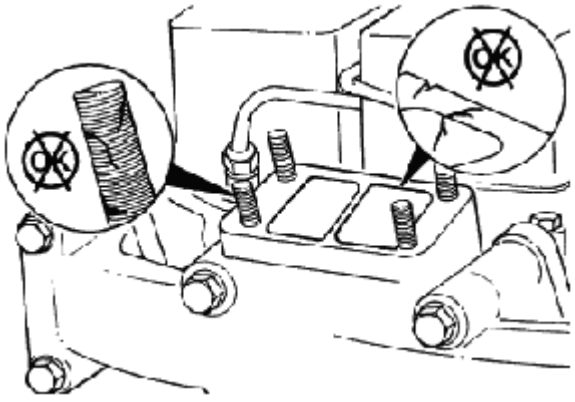

Turbocharger Removal/Installation (Cont)

Install

NOTE: If the turbocharger is not to be immediately replaced, cover the opening to prevent any material from falling into the manifold.

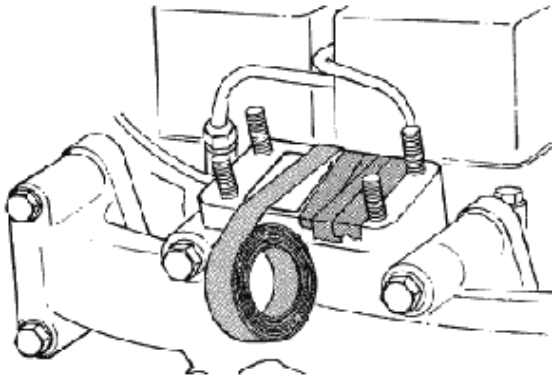

Install a new gasket and apply anti-seize compound to the mounting studs.

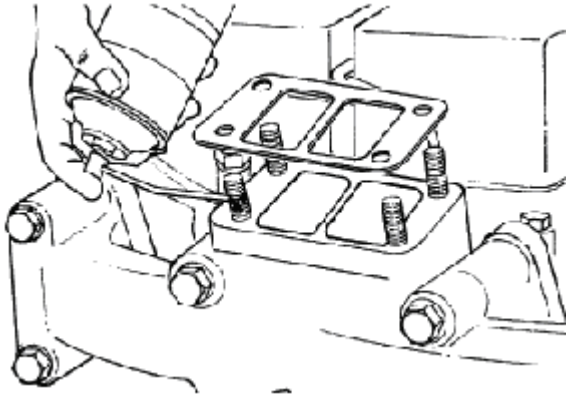

Install the turbocharger and a new gasket.

Torque Value: 43 N•m [32 ft-lb]

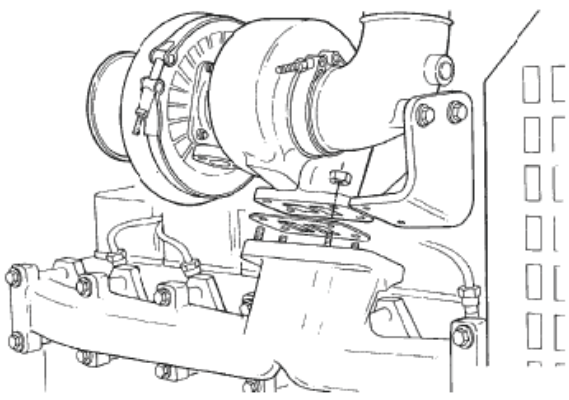

Turbocharger Removal/Installation (Cont)

If required, bend the lockplates back and loosen the turbine housing capscrews. Position the bearing housing to install the turbocharger drain tube.

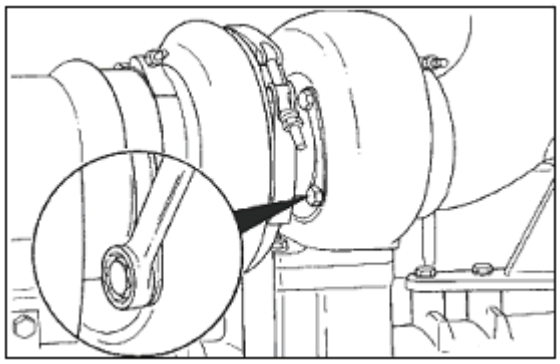

Install the hose and clamps on the turbocharger drain tube loosely. Install the drain tube and gasket on the turbocharger.

Torque Value: 24 N•m [18 ft-lb]

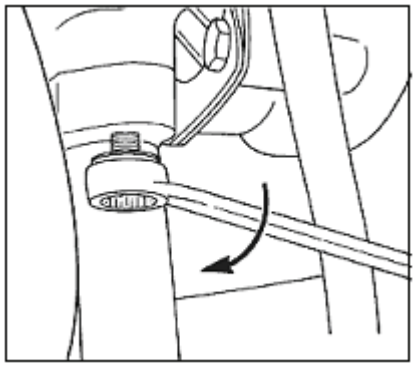

Position the turbocharger drain hose to connect the drain tubes; tighten the clamps.

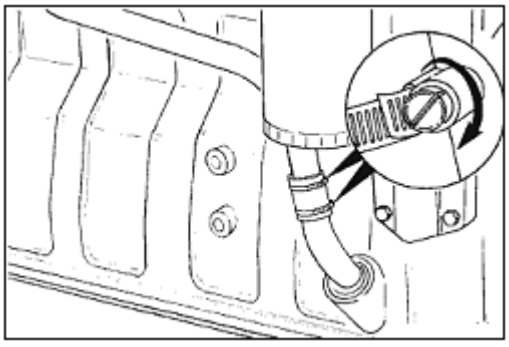

Turbocharger Removal/Installation (Cont)

If loosened, tighten the turbine housing capscrews. Bend the lockplates onto the flats to prevent loosening.

Torque Value: 20 N•m [15 ft-lb]

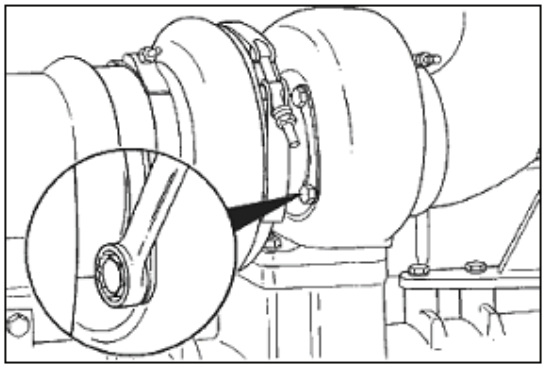

If required, loosen the compressor housing, and position the housing to align with the crossover tube.

Torque Value: 9 N•m [80 in-lb]

Tighten the band clamp. Tap around the clamp with a plastic hammer and tighten again.

Torque Value: 9 N•m [80 in-lb]

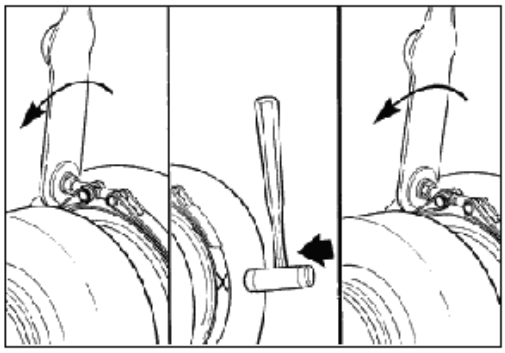

CAUTION

To prevent bearing damage, new turbochargers must be pre-lubricated before start-up.

Pour 50 to 60 cc [3 to 4 oz] of clean lubricating engine oil into the oil supply fitting. Rotate the turbine wheel to allow the oil to enter the bearing housing.

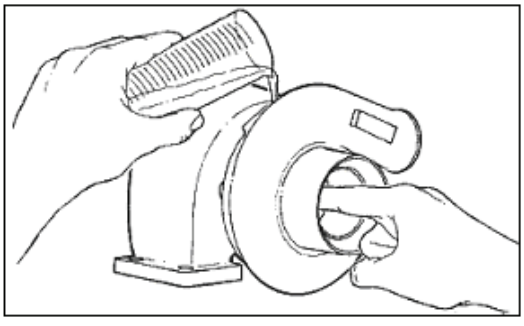

Turbocharger Removal/Installation (Cont)

Install the exhaust outlet connection.

Do not tighten the two mounting capscrews until the band clamp has been tightened.

Torque Value:

- **Band Clamp 8 N•m [71 in-lb]**
- **Capscrews 43 N•m [32 ft-lb]**

CAUTION

When installing the oil supply line, be sure the line is not in direct contact with the turbine housing or the line will burn during operation.

Install the oil supply line.

Torque Value: 35 N•m [26 ft-lb]

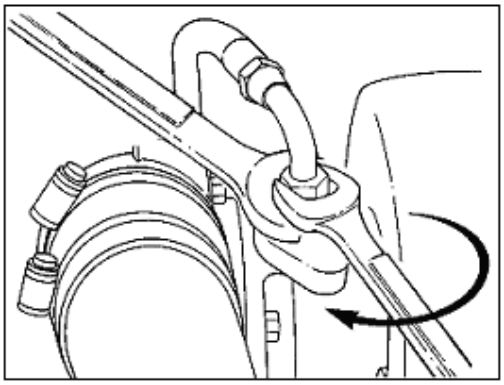

If equipped with a wastegate turbocharger, install the intake manifold pressure supply line from the boost capsule.

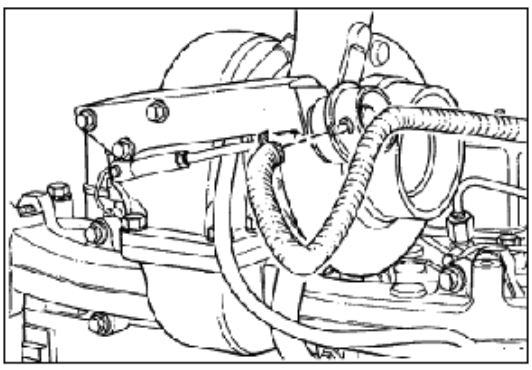

Turbocharger Removal/Installation (Cont)

Test

Install the air crossover tube, inlet, and exhaust piping.

Operate the engine and check for leaks.



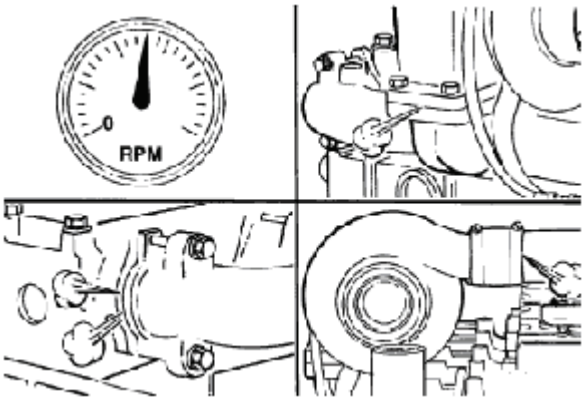

Follow-Up

Turbocharger Oil Drain Line Removal/Installation

Prepare

Remove

Remove the capscrews from the turbocharger oil drain tube.

Pull the drain line out of the drain line boss.



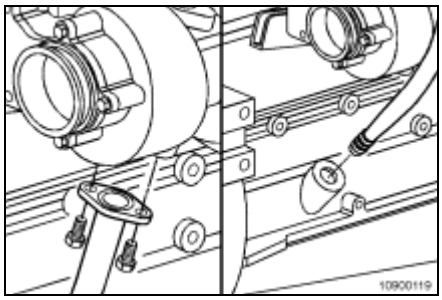

Clean

Clean the gasket sealing surfaces (first frame).

Clean the o-ring seating bore, and make sure it is free of dirt and debris.



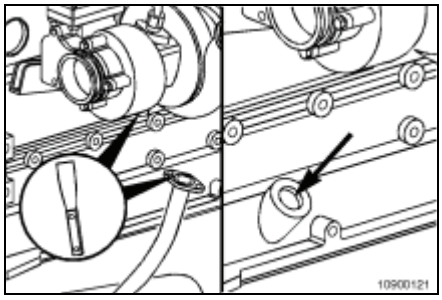

Inspect for Reuse

Inspect line for cracks, wear, and damage.

Inspect the o-ring for fretting and cracking, and replace as necessary.

Check the rubber section of the drain line for deterioration.



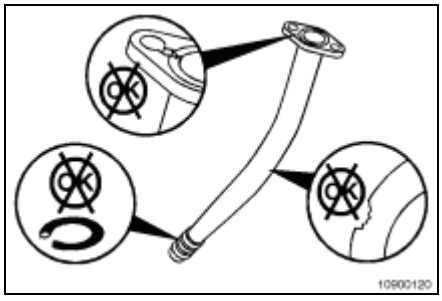

Turbocharger Oil Drain Line Removal/Installation (Cont)

Install

Apply a thin film of oil to the drain line o-rings.

Push the drain line into the drain line boss. Be sure both o-rings are completely seated in the bore.

Install the drain line capscrews with a new gasket.

Torque Value: 24 N•m [18 ft-lb]







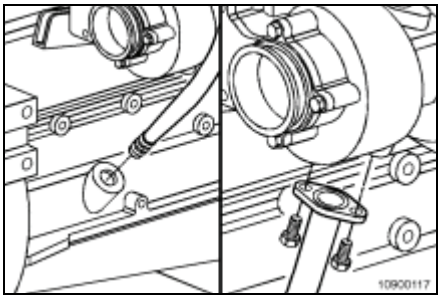

Follow Up

Operate the engine, and check for leaks.



Turbocharger Oil Supply Line Removal/Installation

Prepare

Remove

Remove the oil supply line from the oil filter head.

Remove the oil supply line from the turbocharger bearing housing.

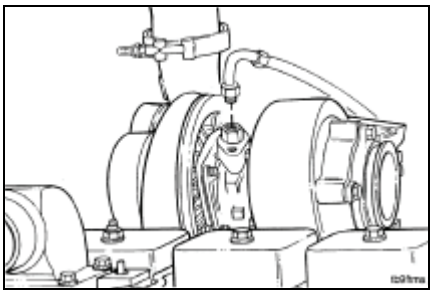

Inspect for Reuse

Inspect the line for cracks, wear, and damage.

Inspect o-rings for cracking and fretting. Replace as necessary.

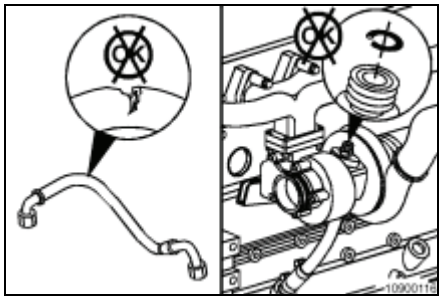

Install

Apply a thin film of oil to the o-ring seals.

Fill the turbocharger oil inlet with clean oil.

Install the oil supply line at both the filter head and the turbo bearing housing.

Tighten the oil supply line to final torque.

Torque Value: 24 N•m [18 ft-lb]

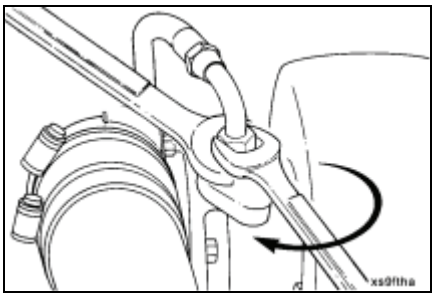

Follow-Up

Turbocharger Wastegate Actuator Removal and Installation

Initial Check



Inspect the integral wastegate actuator hose for cracks or holes.

Replace the hose if damaged.

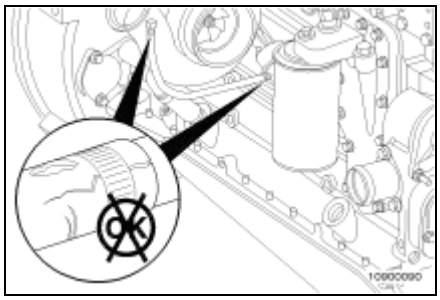

CAUTION

A bent wastegate mounting bracket, actuator rod, or lever can cause improper operation.



Inspect the wastegate mounting bracket, actuator rod, and lever for damage.

If the wastegate mounting bracket, actuator rod, or lever is bent, it must be replaced.

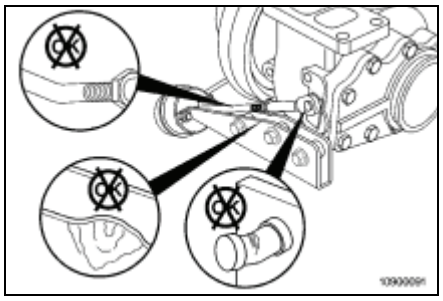

Prepare

Remove

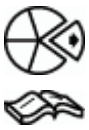

NOTE: In some applications, the turbocharger must be removed in order to remove the wastegate actuator. Refer to Procedure 010-033.

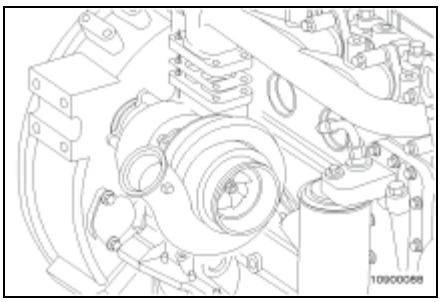

Turbocharger Wastegate Actuator Removal and Installation (Cont)

NOTE: Prior to removal, note position length of the control rod from the boost capsule housing and orientation of the boost capsule hose connector in relation to the mounting bracket.

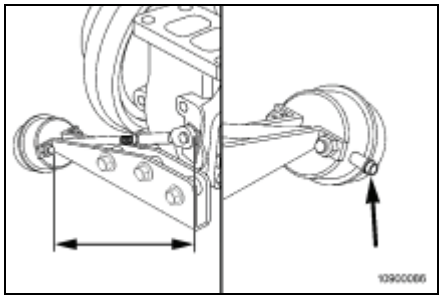

Remove the retaining clip from the control lever.

Disconnect the integral boost line from the wastegate capsule.

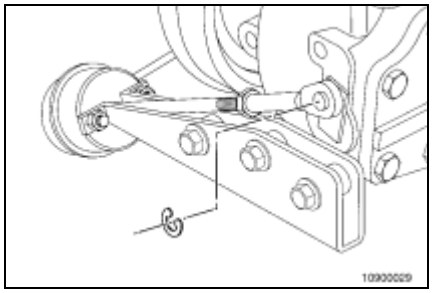

CAUTION

Be careful not to bend the control lever.

Disconnect the boost capsule actuator rod end from the turbocharger wastegate lever. This can be accomplished by slowly applying regulated air pressure to the boost capsule until the control rod is activated.

Disconnect the control rod from the turbocharger wastegate lever pin.

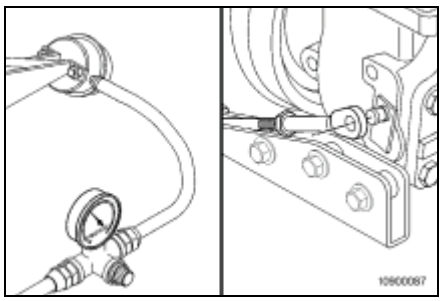

NOTE: If the boost capsule diaphragm material is ruptured and will not hold air pressure, manually pull the control rod outward in order to overcome boost capsule spring tension for removal of the control rod from the turbocharger wastegate lever pin.

Loosen the boost capsule mounting capscrews, disconnect the air supply hose, and remove assembly from the mounting bracket.

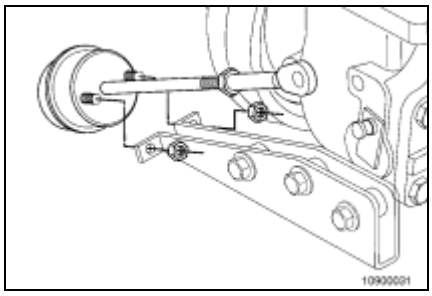

Turbocharger Wastegate Actuator Removal and Installation (Cont)

Test

NOTE: In some applications, the turbocharger must be removed in order to test the wastegate actuator. Refer to Procedure 010-033.

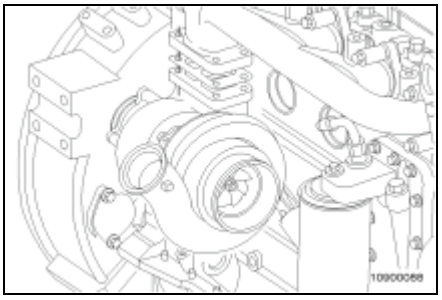

Disconnect the integral boost line from the wastegate capsule.

Attach a dial indicator (1) as shown, so that its shaft is in line with the wastegate actuator rod. Set the indicator to zero.

Connect clean, regulated air pressure and a pressure gauge to the capsule. Apply 200 kPa [29 psi] to make sure the wastegate is functioning properly.

The rod should move approximately 0.33 to 1.27 mm [0.013 to 0.050 in] without any sticking or air leakage.

NOTE: No air should be heard (i.e., leaking noise) through a functional wastegate capsule.

NOTE: A small amount of travel when air pressure is first applied is normal; the tolerance is being removed from the system.

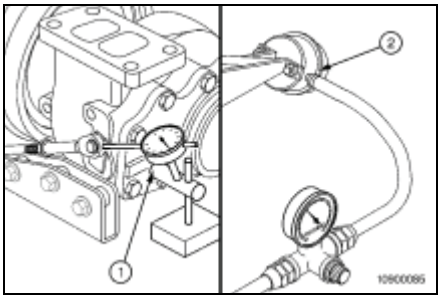

Replace the actuator if no movement of the actuator rod and lever is detected.

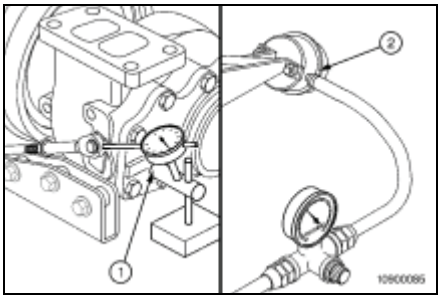

Turbocharger Wastegate Actuator Removal and Installation (Cont)

Install

NOTE: In some applications, the turbocharger must be removed in order to install a new wastegate actuator. Refer to Procedure 010-033.

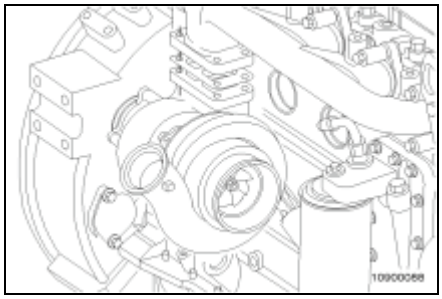

Fit the end-link over the turbocharger wastegate lever pin. With the spine of the spacer visible and the turbocharger wastegate lever pushed toward the rod, lay the actuator alongside the mounting bracket.

NOTE: Do not fit the two studs into the mounting holes at this time.

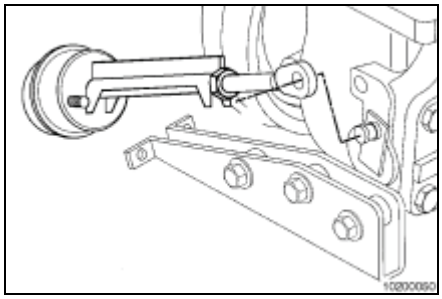

Adjust the length of the actuator assembly by removing from the turbocharger, rotating the end-link, and re-fitting the actuator until the underside of the actuator will just fit over the bracket mounting studs with less than 0.5-mm [0.20-in] gap.

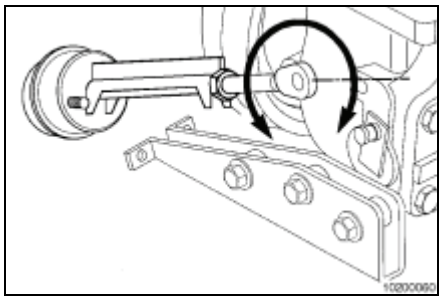

The setting is correct when the underside of the actuator will just fit over the bracket with less than 0.5-mm [0.20-in] gap.

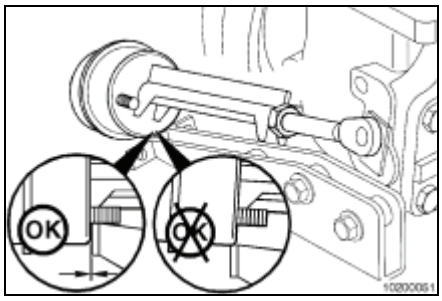

Turbocharger Wastegate Actuator Removal and Installation (Cont)

Fit the actuator mounting studs into the holes in the bracket, and fit both actuator mounting capscrews.

Refit the end-link onto the crank-pin. Install the control rod retaining clip.

Torque Value: 8 N•m [75 in-lb]

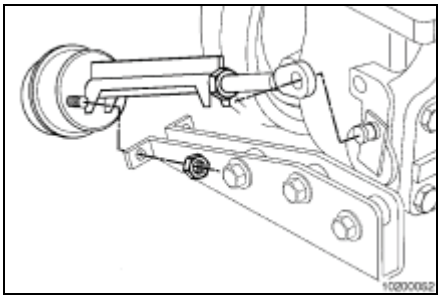

Tighten the control rod jam nut against the end-link. Cut the tie wrap and remove tie wrap and spacer piece. Discard tie wrap. Continue turning jam nut in the same direction, and tighten against end-link.

Torque Value: 8 N•m [75 in-lb]

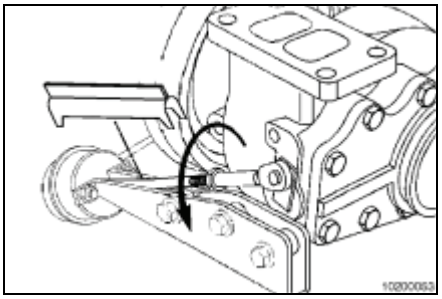

Refit the air supply hose to the actuator using the new hose clamp provided.

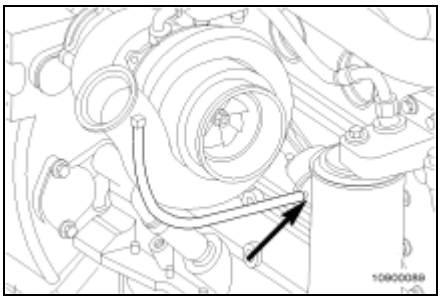

Follow-Up

Turbocharger Wastegate Valve Body Inspection

Prepare

Inspect for Reuse



Inspect the lever pin.

Replace the turbine housing assembly if worn excessively.

Refer to the Turbocharger Master Repair Manual, Bulletin 3580555.

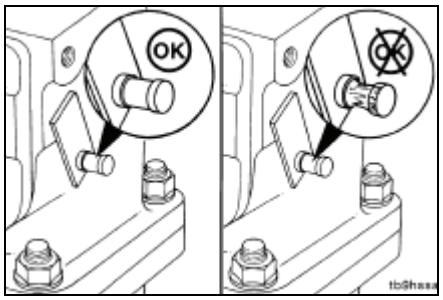



Inspect the valve and valve seat for cracks or erosion.

Replace the turbine housing assembly if worn excessively.

Refer to the Turbocharger Master Repair Manual, Bulletin 3580555.

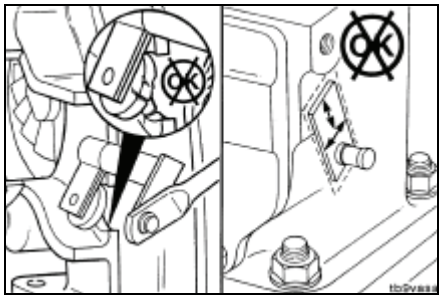



Actuate the lever by hand to be sure that the shaft rotates freely and is not seized.

Check for excessive movement between the shaft and bushing.

Replace the turbine housing if the shaft and bushing are damaged or seized.

Refer to the Turbocharger Master Repair Manual, Bulletin 3580555.

Follow-Up

Aftercooler Removal/Installation

Refer to Aftercooler (40-010-001-tr) in B3.9, B4.5, and B5.9 Series Engines Troubleshooting and Repair Manual, Bulletin No. 3666087.

Prepare

WARNING

Coolant is toxic. Keep away from children and pets. If not reused, dispose of in accordance with local environmental regulations.

Disconnect the cold starting aid, if used.

Remove the air crossover tube.

Remove the high-pressure fuel lines.

Drain 2 liters [2.1 qt] of coolant.

Remove

Remove the coolant supply tube (1) and the coolant return tube (2).

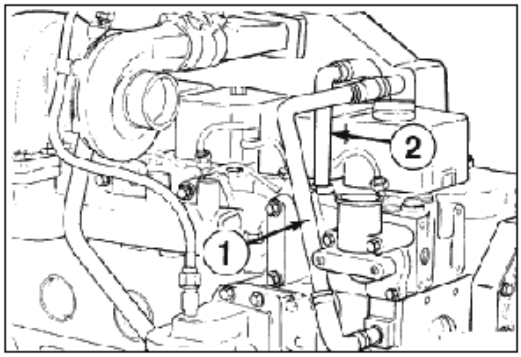

Remove the high-pressure fuel lines.

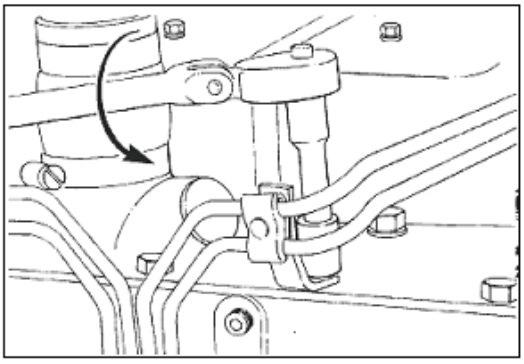

Aftercooler Removal/Installation (Cont)

Remove the aftercooler housing and gasket.

Plug the opening with a clean shop rag to prevent foreign material from entering the air intake.

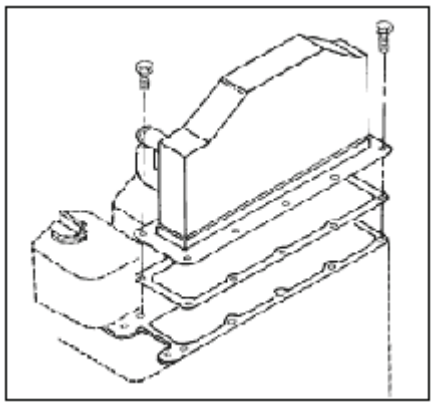

Clean

Clean the sealing surface.

NOTE: Keep the gasket material and any other material out of the air intake.

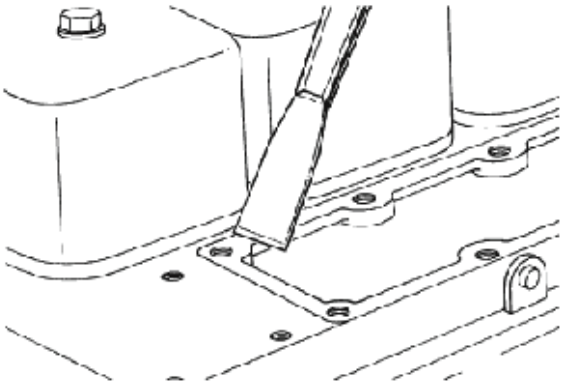

Install

NOTE: The holes shown in the illustration are drilled through. Apply liquid Teflon™ sealant to the capscrews.

Install the aftercooler housing and a new gasket.

Torque Value: 24 N•m [18 ft-lb]

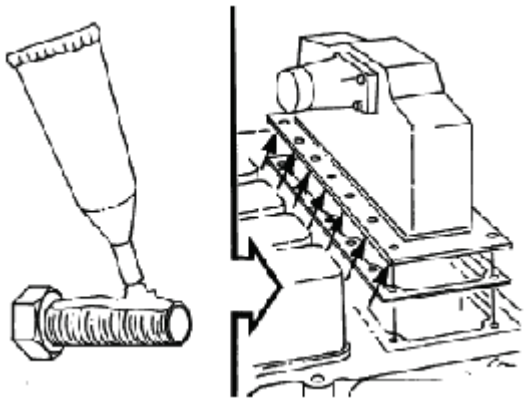

Aftercooler Removal/Installation (Cont)

Install the coolant supply tube (1) and coolant return tube (2). Install the air crossover tube (3).

Torque Value: 8 N•m [71 in-lb]

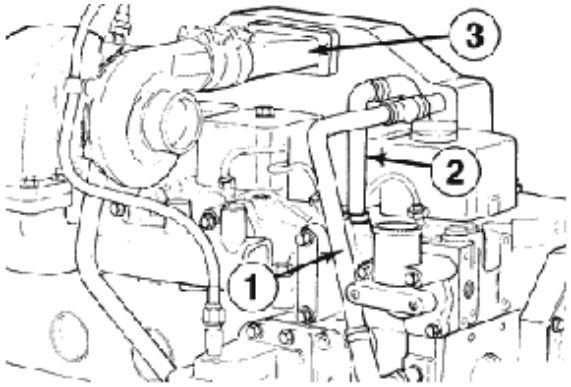

Fill

CAUTION

During filling, air must be vented from the engine cooling passages. Open the engine vent petcock. Make sure to open the petcock on the aftercooler for aftercooled engines. The system must be filled slowly to prevent air locks. Wait 2 to 3 minutes to allow air to be vented; then add coolant to bring the level to the bottom of the radiator filler neck. Failure to do so will cause entrapment of air in cooling system and will cause engine to overheat.

Fill the coolant system with a mixture of 50-percent water and 50-percent ethylene-glycol-type antifreeze.

Follow-Up

This Page Intentionally Left Blank

Lubricating Oil Cooler Removal/Installation

Refer to Lubricating Oil Cooler (40-007-003-tr) in B3.9, B4.5, and B5.9 Series Engines Troubleshooting and Repair Manual, Bulletin No. 3666087.

Prepare

WARNING

Coolant is toxic. Keep away from children and pets. If not reused, dispose of in accordance with local environmental regulations.

WARNING

Some state and federal agencies have determined that used engine oil can be carcinogenic and cause reproductive toxicity. Avoid inhalation of vapors, ingestion, and prolonged contact with used engine oil.

Drain the coolant.

Remove the oil filter.

Remove

Remove the turbocharger oil supply line from the oil filter head.

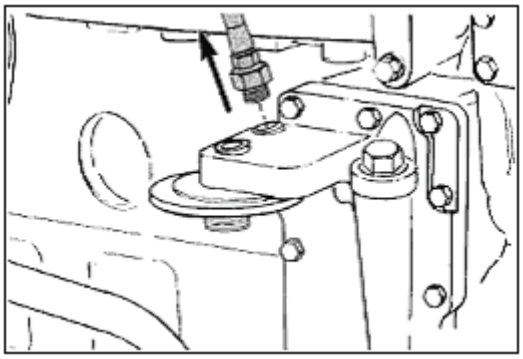

Lubricating Oil Cooler Removal/Installation (Cont)

Remove the oil cooler cover, element, and gaskets.

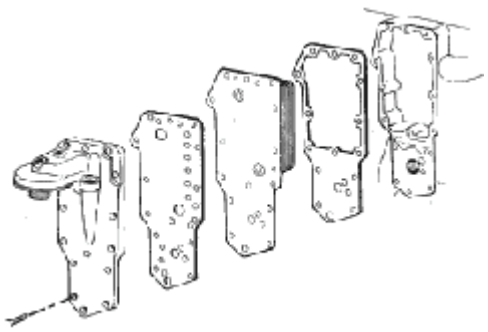

Clean the sealing surfaces.

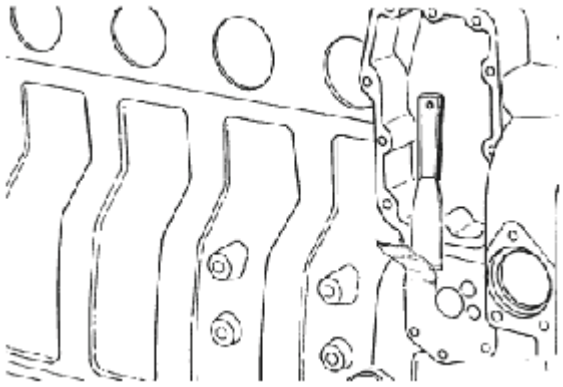

Clean

Clean all debris from around the oil cooler.

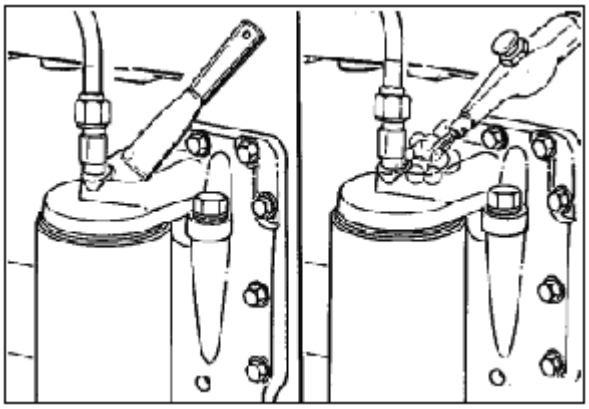

Lubricating Oil Cooler Removal/Installation (Cont)

Install

Assemble the oil cooler gasket, element, cooler cover gasket, and cooler cover to the cylinder block.

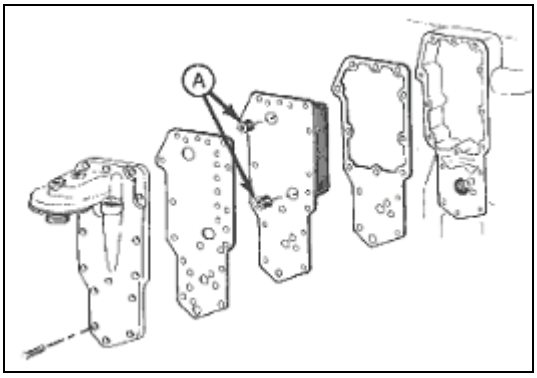

NOTE: Be sure to remove the shipping plugs (A) from the new cooler element.

Torque Value: 24 N•m [18 ft-lb]

Connect the turbocharger oil supply line.

Torque Value: 35 N•m [26 ft-lb]

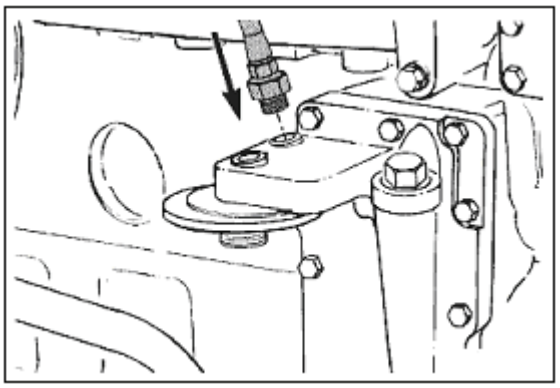

Install a new oil filter.

Follow the manufacturer's instructions for tightening.

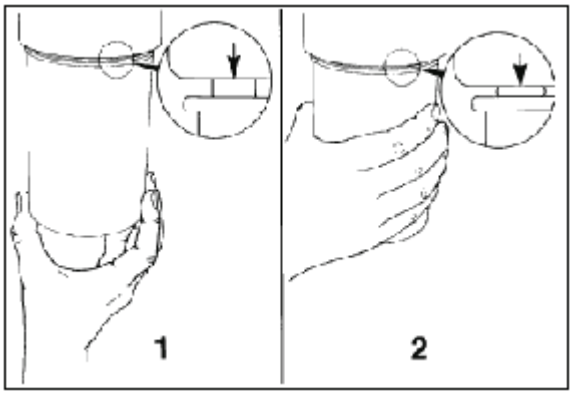

Lubricating Oil Cooler Removal/Installation (Cont)

Fill

CAUTION

The system must be filled slowly to prevent air locks. Be sure to open the aftercooler to allow air to escape as the system is filled.

Fill the coolant system and lubricating oil system. Operate the engine to check for leaks.

Stop the engine and check the coolant and oil level.

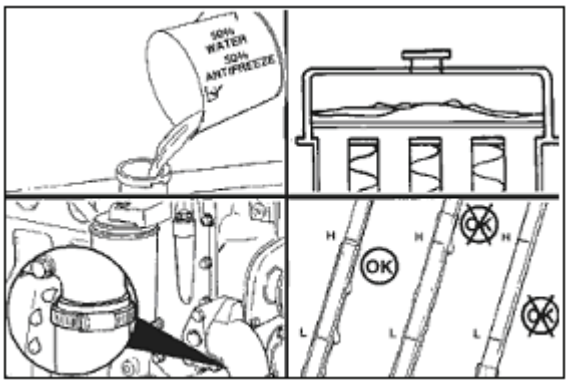

Pressure Test

Pressurize the element to 690 kPa [100 psi] to check it for leaks.

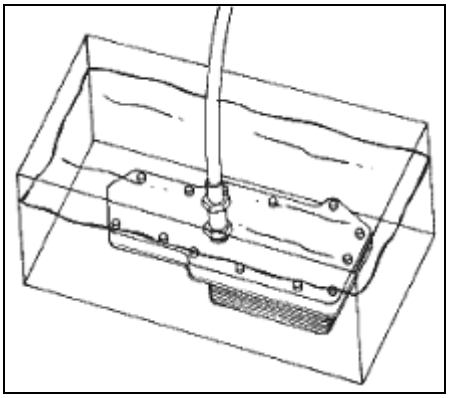

Follow-Up

Lubricating Oil Dip Stick/Tube Removal/Installation

Prepare

Remove

Remove the dipstick (1).

Remove the oil gauge tube (2).

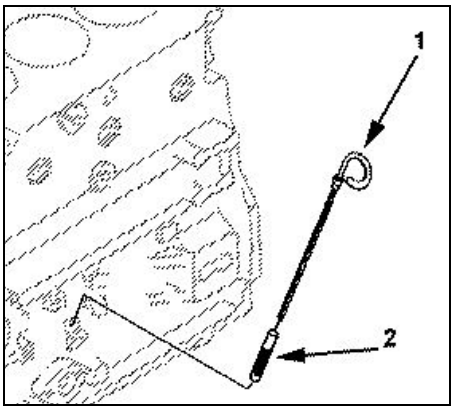

Install

CAUTION

Excessive sealant can run back into the engine and cause damage to other components.

NOTE: Apply Loctite™ sealant, Cummins Part No. 3375068, or equivalent, to the outside of the dipstick tube.

Install the dipstick guide (2) (Cummins Part No. C6204215410).

Install the dipstick (1) (Cummins Part No. C6204215310).

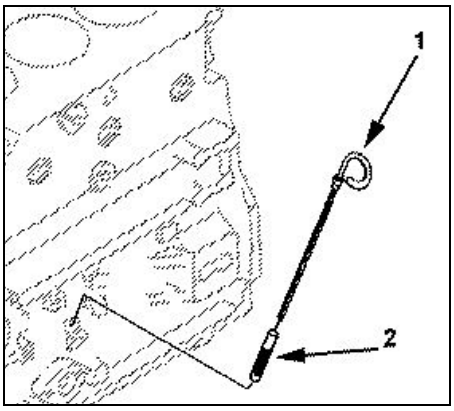

Follow-Up

Lubricating Oil Filter Assembly Removal/Installation

Prepare

Remove



Oil Filter Wrench, Part No. 3375049



Clean the area around the lubricating oil filter head.

Use the oil filter wrench, Part No. 3375049, to remove the filter.

Clean the gasket surface of the filter head.

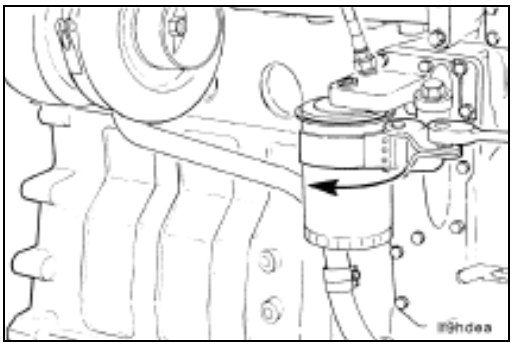

Install



CAUTION

The lack of lubrication during the delay until the filter is pumped full of oil at start-up is harmful to the engine.

Use clean 15W-40 oil to coat the gasket surface of the filter.

Fill the filter with clean 15W-40 oil.

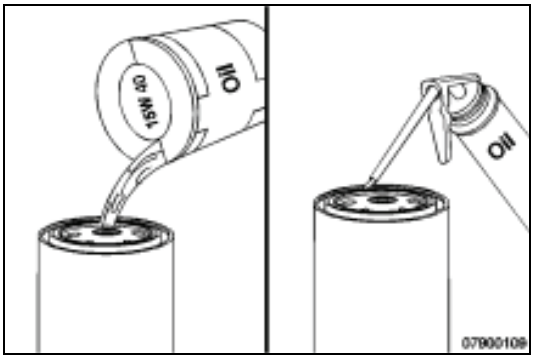

CAUTION

Mechanical over-tightening of the filter can distort the threads or damage the filter element seal.



Oil Filter Wrench, Part Number 3375049



Install the filter on the oil filter head. Tighten the filter until the gasket contacts the filter head surface.



Use the oil filter wrench, Part Number 3375049, to tighten the filter. Read the instructions supplied with the filter.

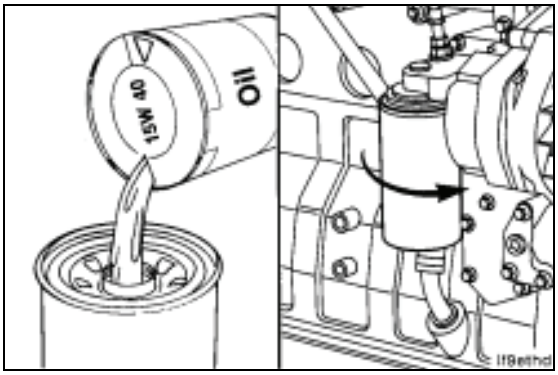

Lubricating Oil Filter Assembly Removal/Installation (Cont)

Operate the engine and check for leaks.

NOTE: Engine oil pressure must be indicated on the gauge within 15 seconds after starting. If oil pressure is not registered within 15 seconds, shut off the engine immediately to avoid engine damage. Confirm that the correct oil level is in the oil pan.



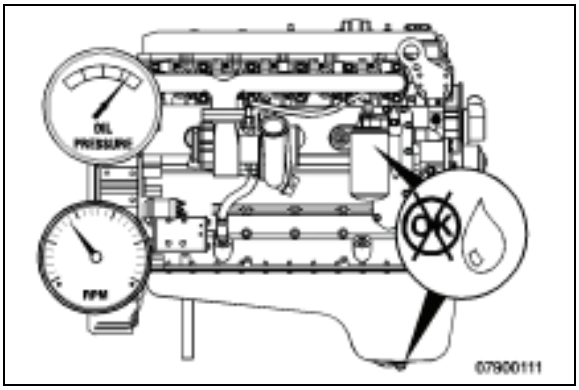

Install

Refer to Lubricating Oil Filter (Spin-On) (53-007-013) in ISB and QSB5.9 Base Engine Troubleshooting and Repair Manual, Bulletin Number 3666193.

Follow-Up

Lubricating Oil Pan Removal/Installation

Prepare

Drain

WARNING

Some state and federal agencies in the United States of America have determined that used engine oil can be carcinogenic and can cause reproductive toxicity. Avoid inhalation of vapor, ingestion, and prolonged contact with used engine oil.

WARNING

Hot oil can cause serious personal injury.

NOTE: Use a container that can hold at least 20 liters [15 qt] of lubricating oil.

Operate the engine until the coolant temperature reaches 60°C [140°F]. Shut off the engine. Remove the oil drain plug. Drain the oil immediately to be sure all the oil and suspended contaminants are removed from the engine.

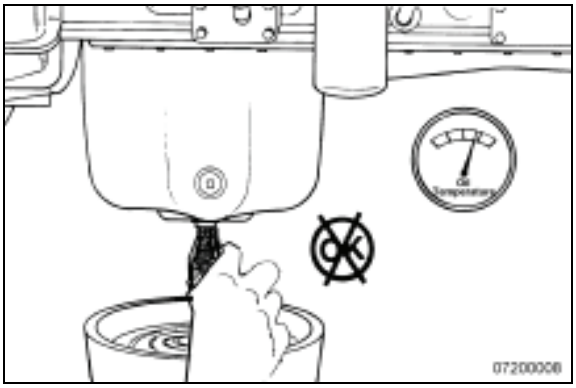

Remove

Remove the lubricating oil pan and gasket.

If the suction tube must be removed. Refer to Procedure 007-035.

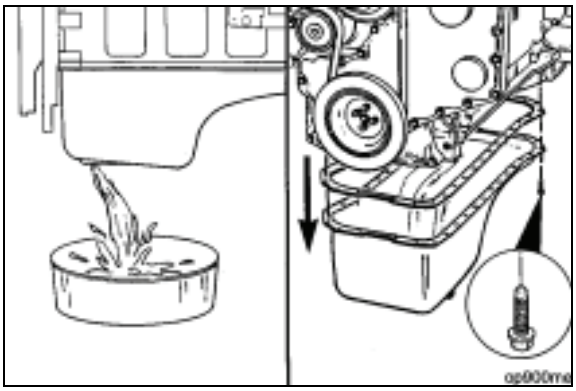

Lubricating Oil Pan Removal/Installation (Cont)

Clean

WARNING

Wear appropriate eye and face protection when using compressed air. Flying debris and dirt can cause bodily injury.

Using a putty knife, remove all gasket material from the cylinder block and oil pan surface.

Steam-clean the oil pan. Dry the oil pan with compressed air.

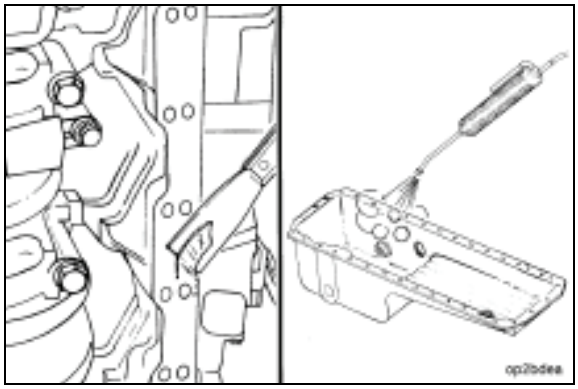

Inspect for Reuse

Inspect the oil pan, suction tube, and tube braces for damage.

NOTE: If cracks are found, replace the damaged part. Do not attempt to repair the oil pan by welding.

If the suction tube must be replaced. Refer to Procedure 007-035.

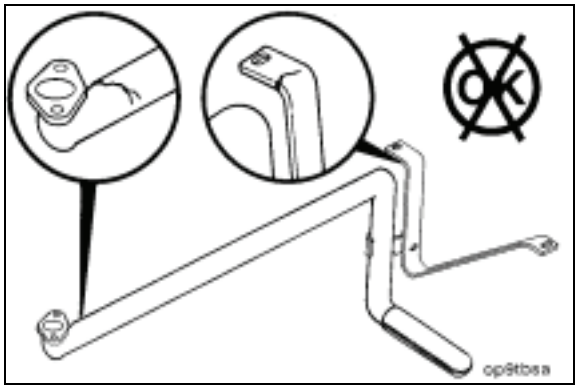

Install

Use Three-Bond™ sealant, Part Number 3823494, or equivalent, to fill the joints between the oil pan rail, gear housing, and rear seal housing.

If the suction tube has been removed. Refer to Procedure 007-035 for installation instructions.

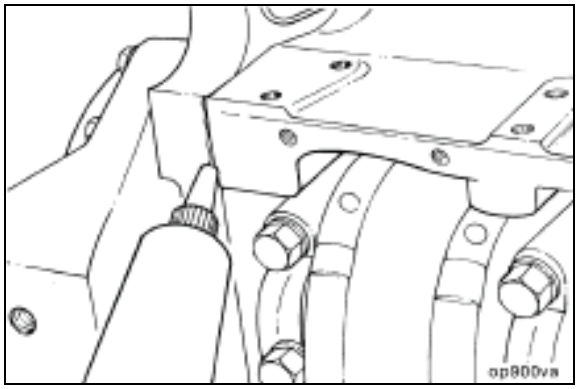

Lubricating Oil Pan Removal/Installation (Cont)

Apply a 2-mm [0.063-in] bead of Three-Bond™ sealant, Part Number. 3823494, or equivalent, to both sides of the new oil pan gasket.

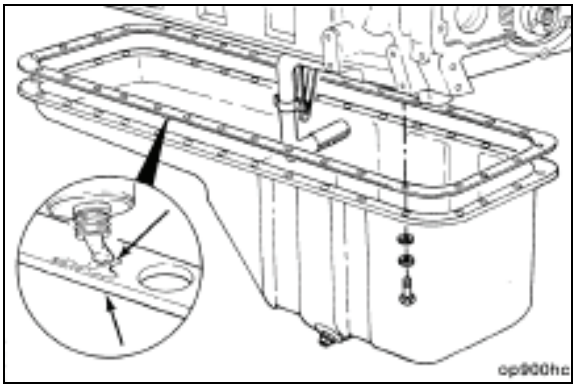

Assemble the washers and capscrews to secure the oil pan, as illustrated.

Install the gasket and lubricating oil pan.

Tighten all capscrews in the sequence shown in the accompanying chart.

Torque Value: 24 N•m [18 ft-lb]

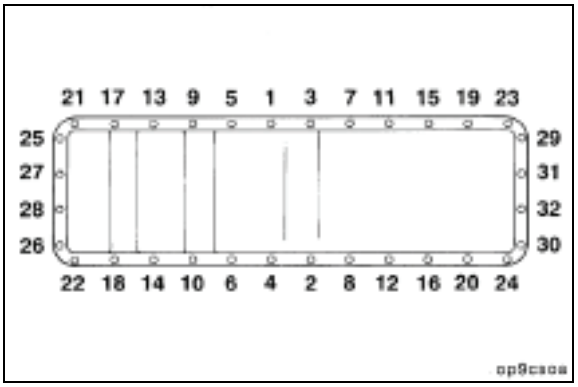

Clean and check the oil drain plug threads and sealing surface.

Install and tighten the oil pan drain plug.

Torque Value: 60 N•m [44 ft-lb]

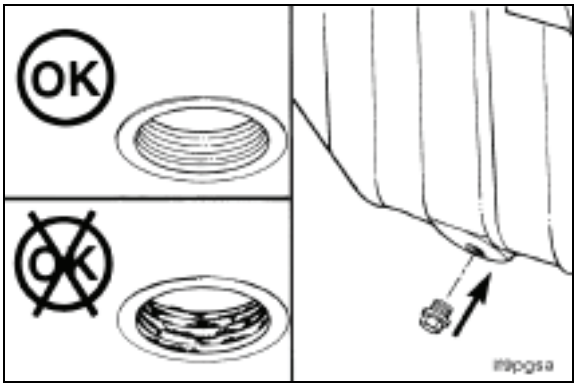

Lubricating Oil Pan Removal/Installation (Cont)

Fill

NOTE: Use a high-quality 15W-40 multiviscosity oil, such as Cummins Premium Blue®, or its equivalent, in Cummins engines. Choose the correct oil for your operating climate as outlined in the Operation and Maintenance Manual, ISB Engine, Bulletin No. 3666170.

Turbocharged engines: CF/SG



Fill the engine with clean 15W-40 lubricating oil to the proper level.

NOTE: When filling the oil pan, use the fill tube on the side of the engine rather than on top of the rocker lever cover.

NOTE: If the engine is not equipped with a side-fill, wait at least 3 minutes before measuring the oil level with the dipstick to allow the oil to drain to the pan.

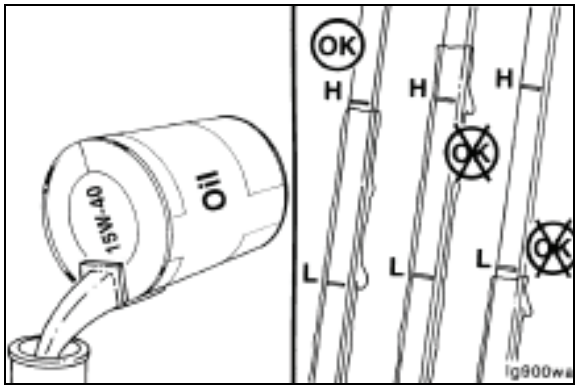

Idle the engine to inspect for leaks at the drain plug.

NOTE: Engine oil pressure must be indicated on the gauge within 15 seconds after starting. If oil pressure is not registered within 15 seconds, shut off the engine immediately to avoid engine damage. Confirm that the correct oil level is in the oil pan.

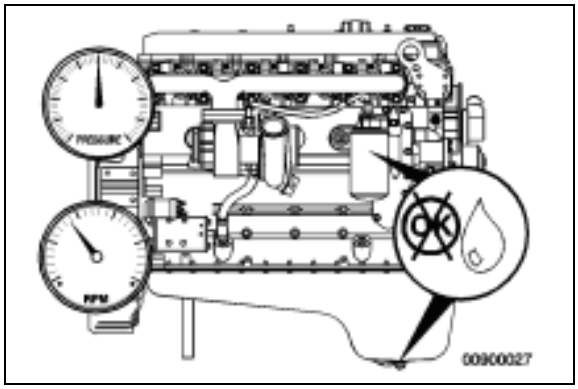

Lubricating Oil Pan Removal/Installation (Cont)

Shut off the engine. Wait approximately 5 minutes to let the oil drain from the upper parts of the engine. Check the level again.

Add oil as necessary to bring the oil level to the “H” (high) mark on the dipstick.

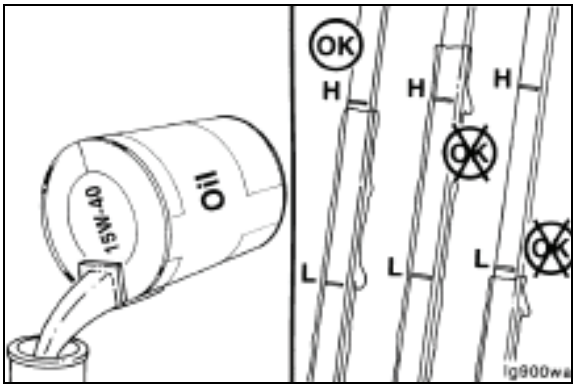

Follow-Up

Oil Pressure Sender Removal/Installation

Prepare

Remove



Disconnect the wire from the sending unit.

NOTE: The sending units illustrated can differ from those installed by the original equipment manufacturer (OEM).

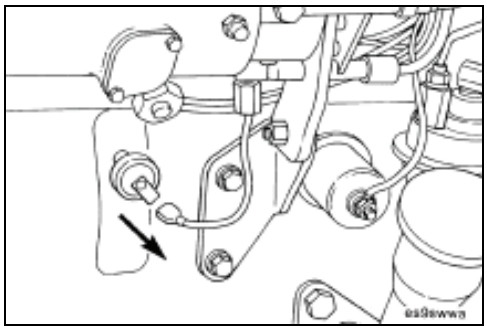

Inspect for Reuse







Remove the OEM oil pressure sensor, and install a pressure gauge.

Start the engine.

Measure the lubricating oil pressure.

Minimum lubricating oil pressure:

- **Low Idle (675 to 725 rpm): 69 kPa [10 psi]**
- **High Idle rpm: 207 kPa [30 psi]**

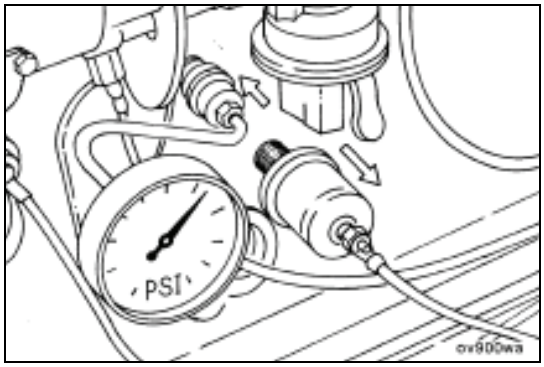

Install





Install the sending unit.

Connect the wire to the sending unit.

Torque Values:

- **Installed into Cast Iron 16 N•m [12 ft-lb]**
- **Installed into Aluminum 10 N•m [7 ft-lb]**

Follow-Up

Oil Pressure Gauge Removal/Installation

Prepare

Place the fire protection system in a safe mode for engine service.

Place the AUTO/MANUAL rocker switch in the MANUAL position.

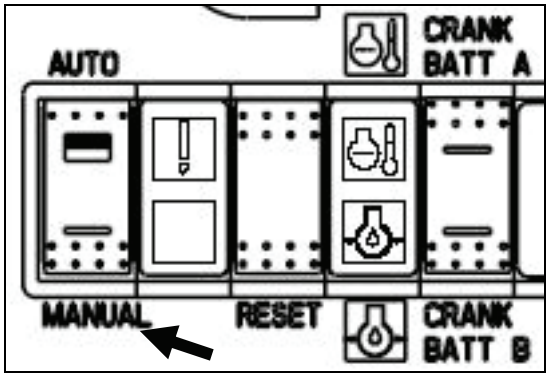

REMOVE BATTERY POWER BEFORE SERVICING ENGINE OR CONTROLS.

For safety reasons, both batteries must be disconnected before performing service on the Firepump Engine or on any of its controls. Before disconnecting the batteries, place the Firepump Controller in its appropriate service position in order to avoid a “Battery Failure” alarm.

Wear safety glasses when disconnecting batteries!

Next, disconnect both batteries at their terminals.

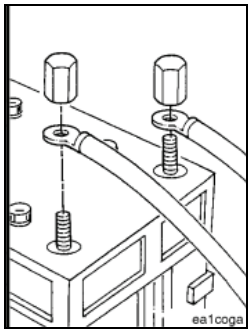

Remove

NOTE: Refer to Drawing 10423 Sheet 1 in Section 13 for electrical schematic details.

Open the local control panel.

NOTE: Ensure that the wires are clearly tagged for reconnection.

Loosen the nuts on the stud and remove the wires.

Remove the nuts on the mounting bracket and remove the gauge from the panel.

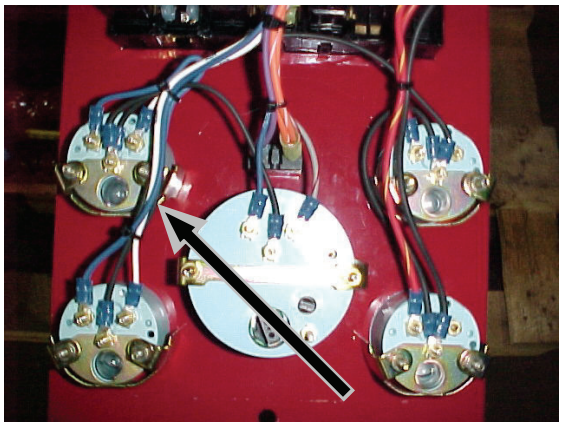

Oil Pressure Gauge Removal/Installation (Cont)

Install

Orient the gauge in the cutout in the electrical panel.

Position the mounting bracket on the gauge.

Install the mounting nuts.

Reconnect the electrical wires on the studs in the same positions as they were originally installed.

Tighten the nuts on the studs.

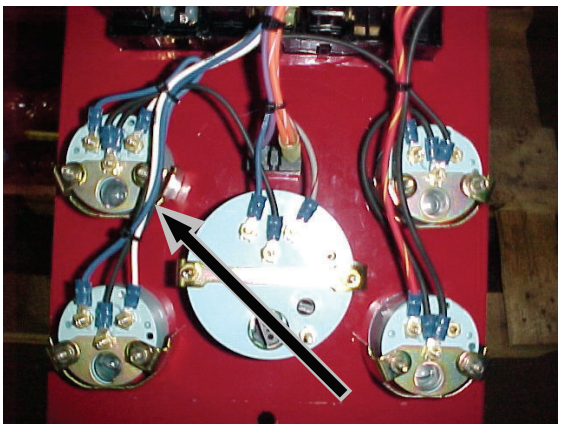

Follow-up

For safety reasons, both batteries must be re-connected before putting the engine and fire protection system controller back in service.

Wear safety glasses when reconnecting batteries!

Reconnect the batteries at their terminals after all service work has been completed.

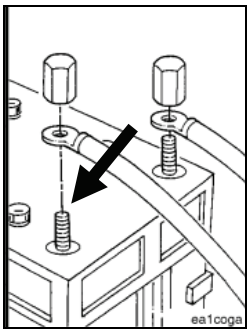

Place the AUTO/MANUAL rocker switch in the AUTO position.

Return the fire protection system to operating status.

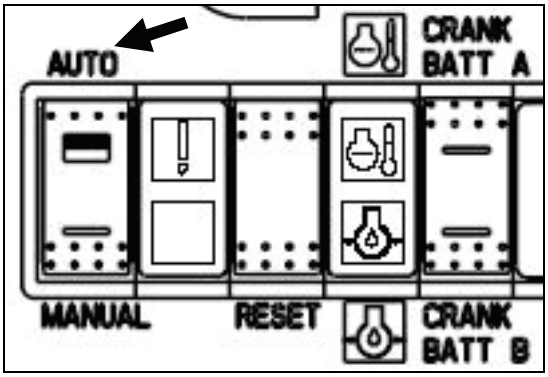

Lubricating Oil Pressure Regulator Removal/Installation

Refer to Lubricating Oil Pressure Regulator (Main Rifle) (40-007-029-tr) in B3.9, B4.5, and B5.9 Series Engines Troubleshooting and Repair Manual, Bulletin No. 3666087.

Prepare

Clean debris.

Remove

Remove the plug and regulator valve.

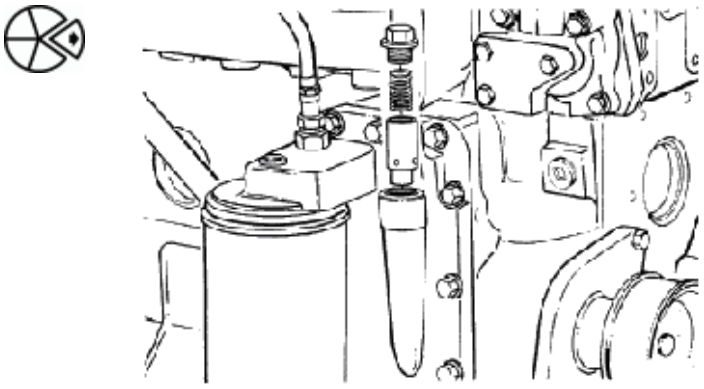

Clean

Clean and inspect the regulator valve.

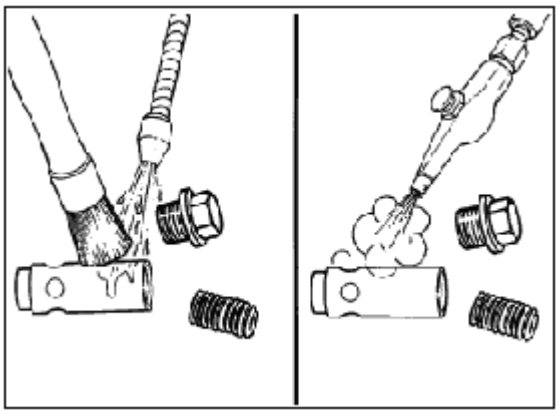

Lubricating Oil Pressure Regulator Removal/Installation (Cont)

Clean and inspect the regulator valve bore.

NOTE: In order to regulate the oil pressure, the valve must move freely in the bore.

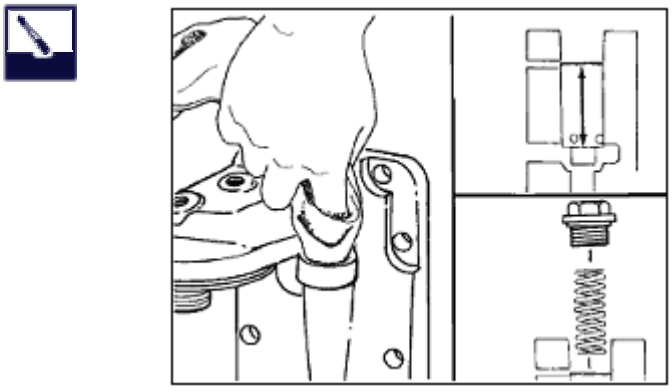

Install

Install a new sealing o-ring on the threaded plug and lubricate with clean lubricating engine oil. Install the pressure regulator assembly.

Torque Value: 80 N•m [59 ft-lb]

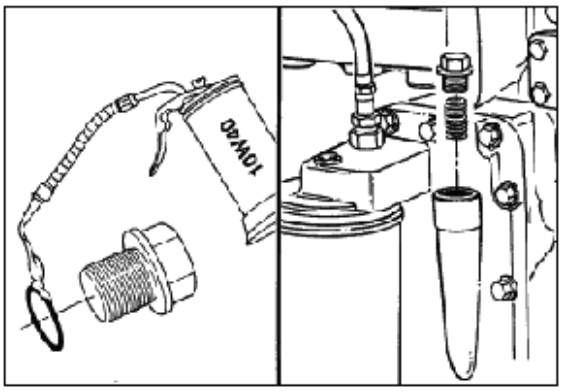

Follow-Up

Oil Pressure Switch Removal/Installation

Prepare

Remove

Disconnect the oil pressure switch wiring.

Remove the oil pressure switch.

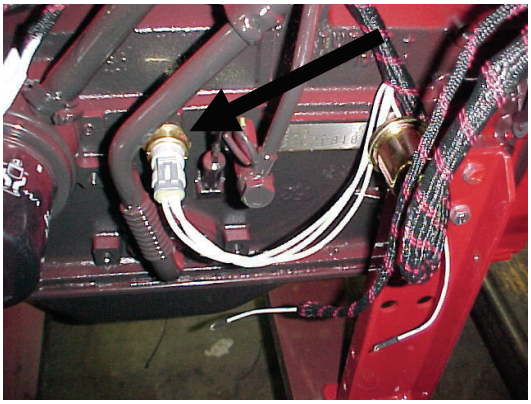

Install

NOTE: Apply liquid teflon sealant to the threads when installing the temperature switch.

Install the temperature sensor.

Torque Value:

- **(Cast Iron) 50 N•m [37 ft-lb]**
- **(Aluminum) 30 N•m [22 ft-lb]**

Reconnect the wiring.

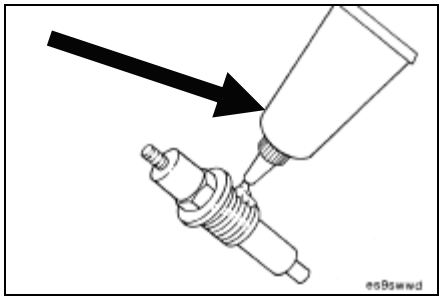

Follow-Up

Operate the engine. Refer to Operating Instructions in Section 3.

Check for leaks. Repair any leaks.

Lubricating Oil Pump Removal/Installation

Prepare

Remove the drive belt. Refer to Procedure 008-002.



Remove

Remove the vibration damper. Refer to Procedure 001-051 or Procedure 001-052.

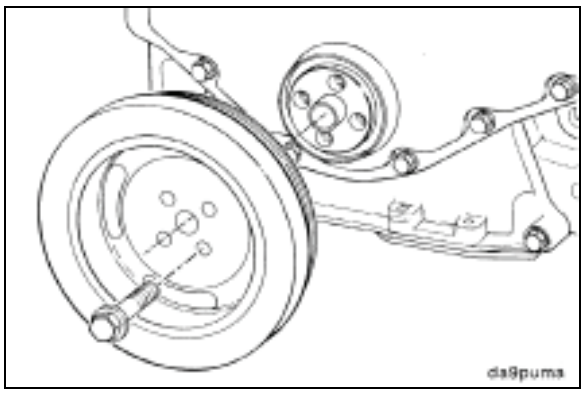

Remove the front gear cover. Refer to Procedure 001-031.

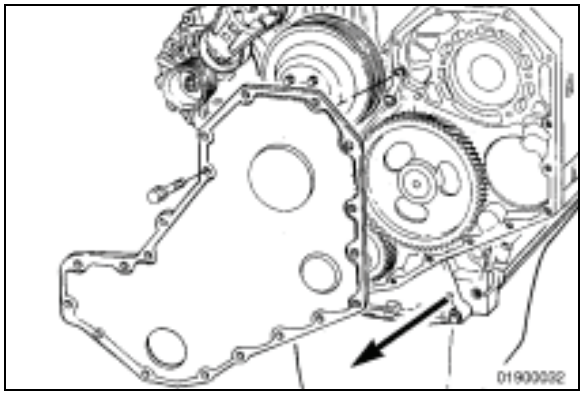

Lubricating Oil Pump Removal/Installation (Cont)

Remove the four mounting capscrews (1, 2, 3, and 4).

Remove the lube oil pump from the bore in the cylinder block.

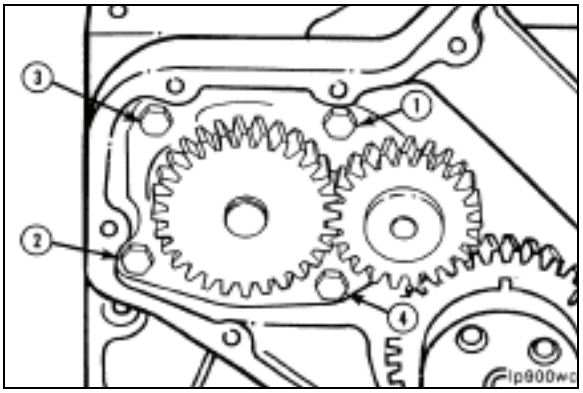

Inspect for Reuse

Inspect the lubricating oil pump gears for chips, cracks, or excessive wear.

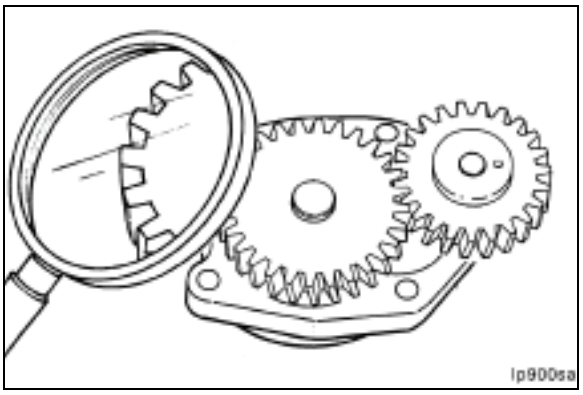

Remove the back plate.

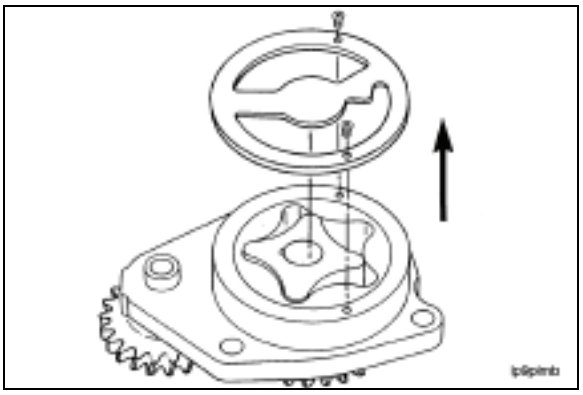

Lubricating Oil Pump Removal/Installation (Cont)

Mark “TOP” on the gerotor planetary.

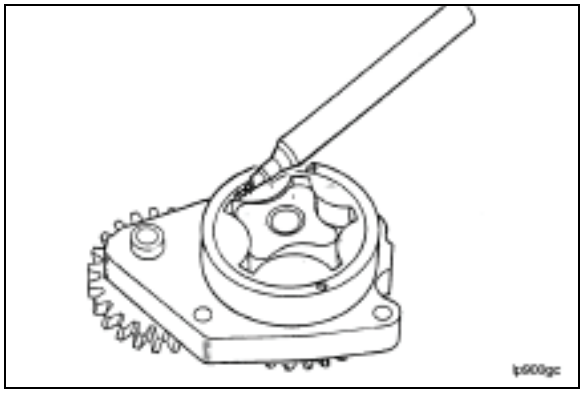

Remove the gerotor planetary.

Inspect for excessive wear or damage.

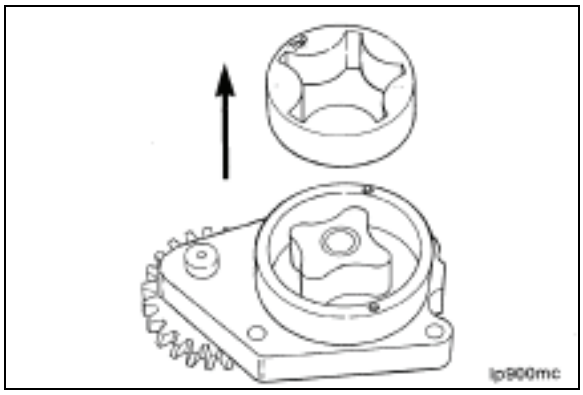

WARNING

When using solvents, acids, or alkaline materials for cleaning, follow the manufacturer's recommendations for use. Wear goggles and protective clothing to avoid personal injury.

WARNING

Wear appropriate eye and face protection when using compressed air. Flying debris and dirt can cause bodily injury.

Clean all parts in solvent and dry with compressed air.

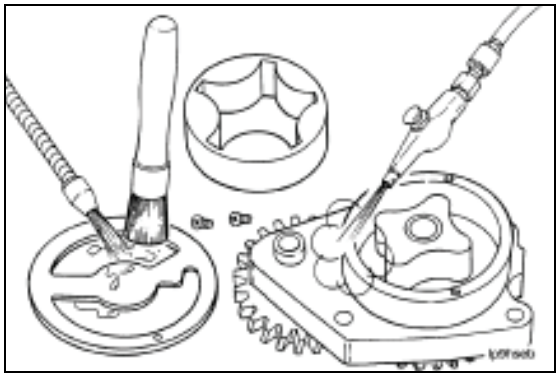

Lubricating Oil Pump Removal/Installation (Cont)

Inspect the lubricating oil pump housing and gerotor drive for damage and excessive wear.

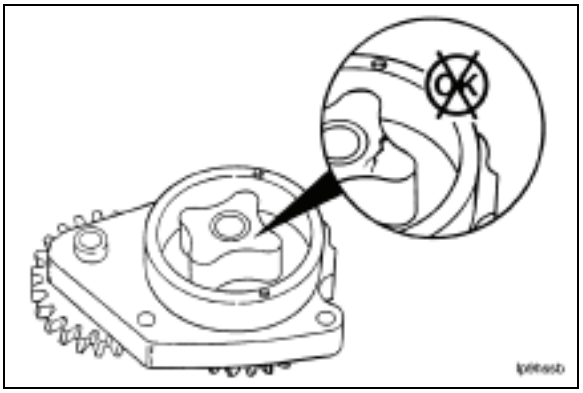

CAUTION

Make sure the gerotor planetary is installed in the original position. Failure to do so can damage the oil pump.

Install the gerotor planetary.

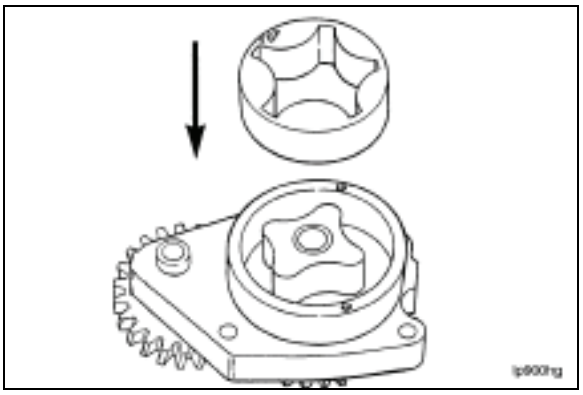

Measure

Measure the tip clearance.

MAX Limit 0.1778 mm [0.007 in]

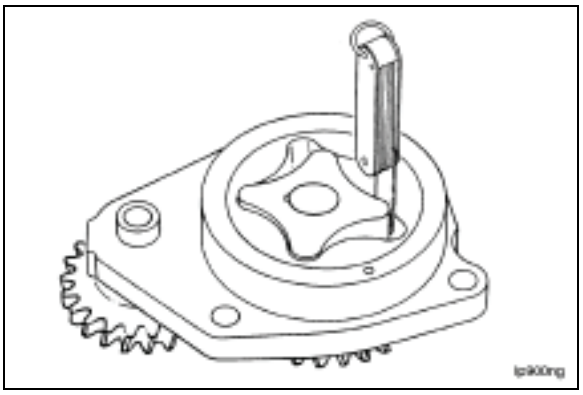

Lubricating Oil Pump Removal/Installation (Cont)

Measure the clearance of the gerotor drive/gerotor planetary to port plate.

MAX Limit 0.127 mm [0.005 in]

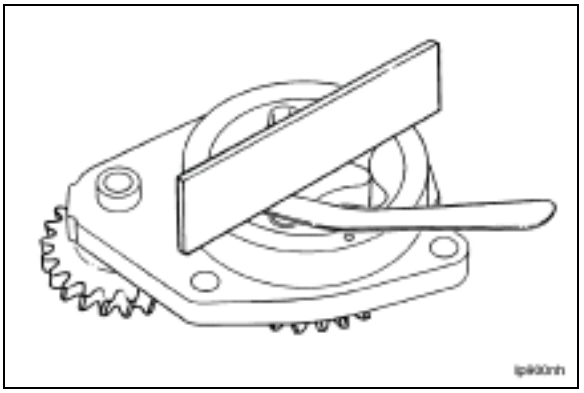

Measure the clearance of the gerotor planetary to the body bore.

MAX Limit 0.381 mm [0.015 in]

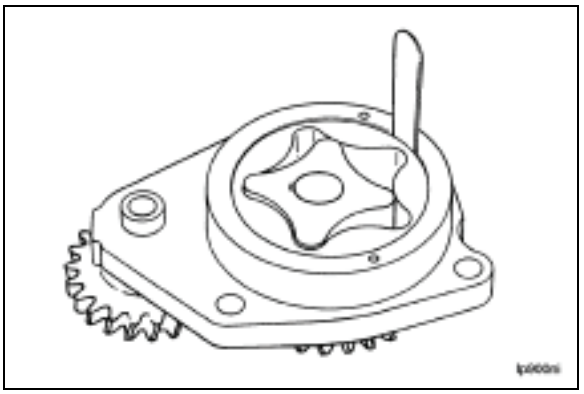

Measure the gear backlash.

Limits (Used Pump)

- **MIN 0.75 mm [0.030 in]**
- **MAX 0.85 mm [0.033 in]**

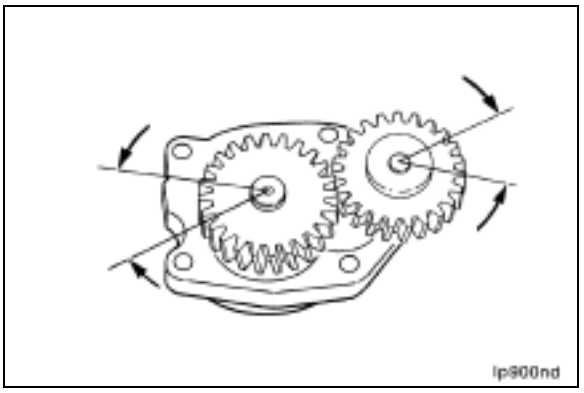

Lubricating Oil Pump Removal/Installation (Cont)

Install

Install the back plate.

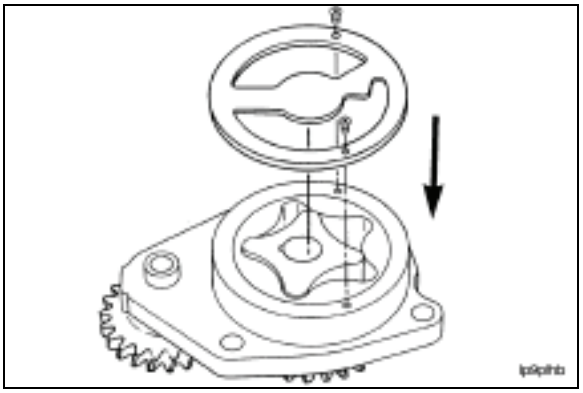

CAUTION

Failure to fill the pump with oil during installation can result in a slow prime at initial engine start-up, resulting in severe engine damage.

Lubricate the lubricating oil pump with clean 15W-40 engine oil.

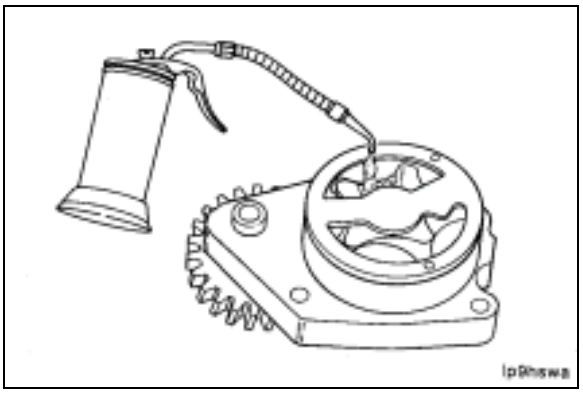

CAUTION

Make sure the idler gear pin is installed in the locating bore in the cylinder block.

Install the lubricating oil pump.

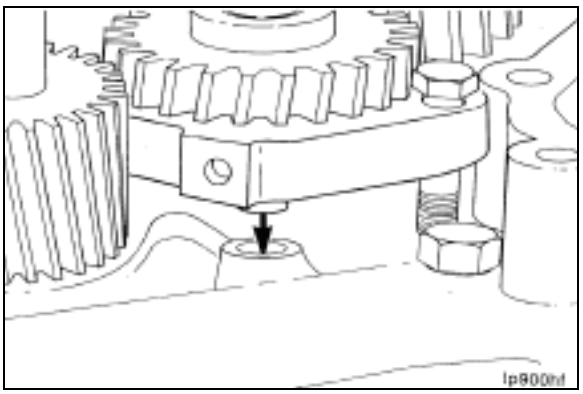

Lubricating Oil Pump Removal/Installation (Cont)

Tighten in the sequence shown.

Torque Value: 24 N•m [18 ft-lb]

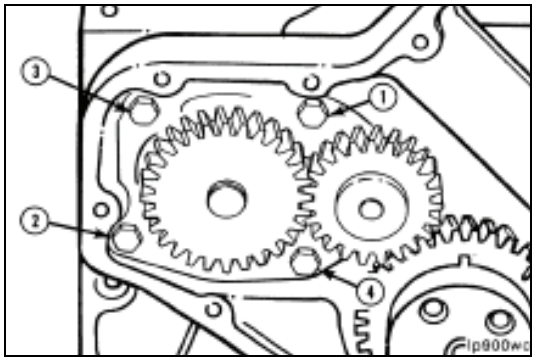

NOTE: The back plate on the pump seats against the bottom of the bore in the cylinder block. When the lubricating oil pump is correctly installed, the flange on the lubricating oil pump will not touch the cylinder block.

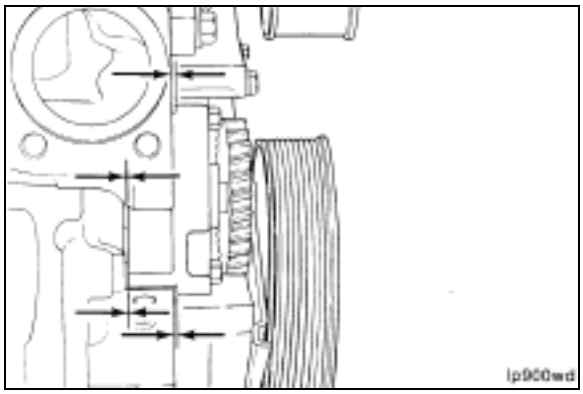

NOTE: Be sure the gear backlash is correct if installing a new lubricating oil pump.

Measure the gear backlash.

Backlash Limits

A

- **MIN 0.75 mm [0.030 in]**
- **MAX 0.85 mm [0.033 in]**

B

- **MIN 0.75 mm [0.030 in]**
- **MAX 0.85 mm [0.033 in]**

NOTE: If the adjoining gear moves when you measure the backlash, the reading will be incorrect.

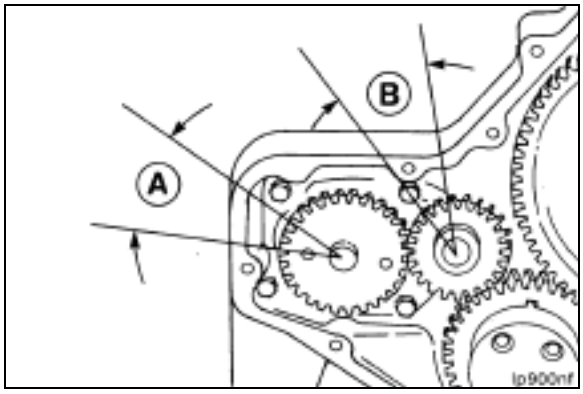

Lubricating Oil Pump Removal/Installation (Cont)

Gear Cover - Installation

Lubricate the front gear train with clean 15W-40 engine oil.

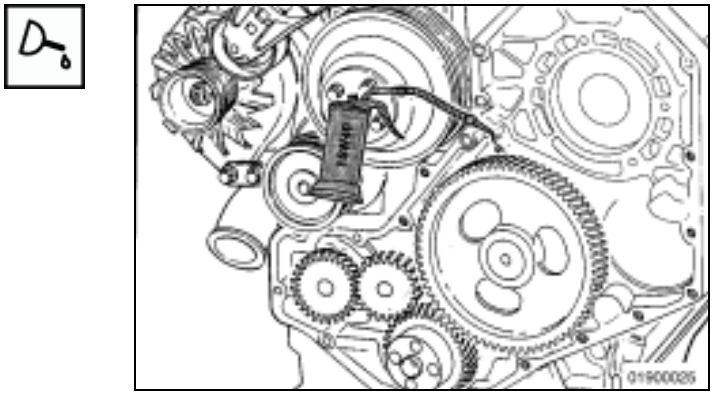

CAUTION

The seal lip and the sealing surface on the crankshaft must be free from all oil residue to prevent seal leaks.

Thoroughly clean the front seal area of the crankshaft.

NOTE: Always replace the front seal when removing and installing the gear cover. Refer to Procedure 001-023.

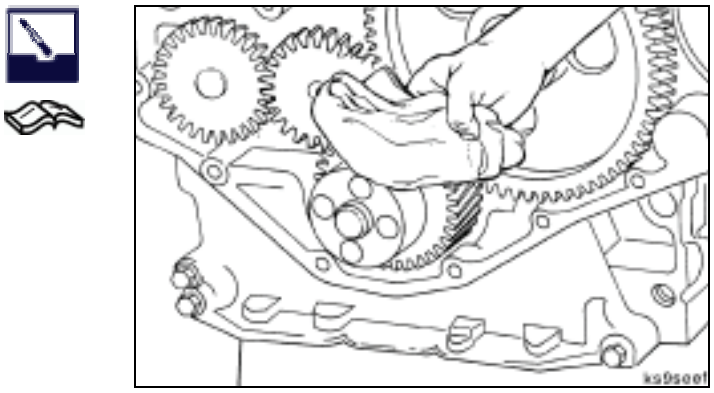

Apply a thin bead of Three-Bond™, or equivalent, to the front cover side of the gasket only.

NOTE: Do not remove the plastic seal pilot tool from the lubricating oil seal at this time. Use the plastic seal pilot tool to guide the seal on the crankshaft.

Install the gasket and front cover on the engine.

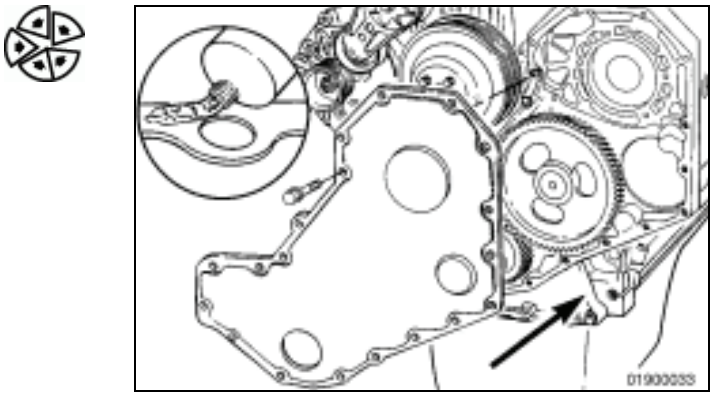

Lubricating Oil Pump Removal/Installation (Cont)

Tighten the front cover mounting capscrews in the indicated order.

Torque Value: 24 N•m [18 ft-lb]

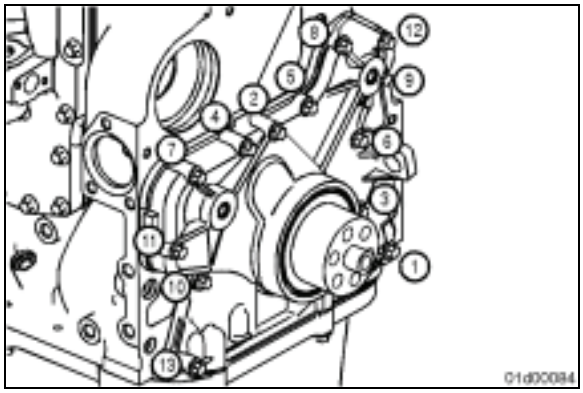

Remove the plastic pilot tool from the crankshaft.

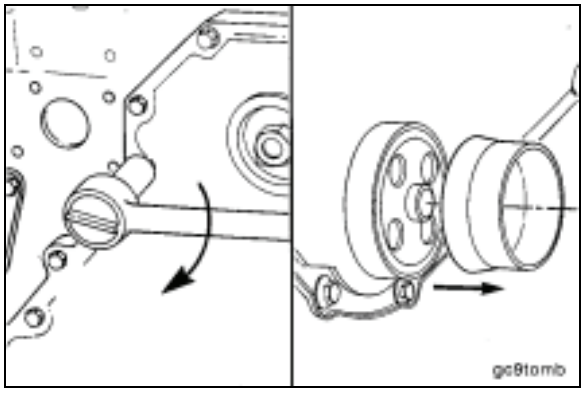

Install the front breather and tube. Refer to Procedure 003-018.

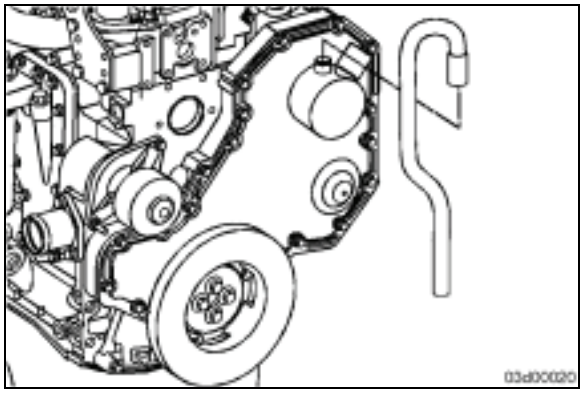

Lubricating Oil Pump Removal/Installation (Cont)

Install the vibration damper. Refer to Procedure 001-051 or Procedure 001-052.

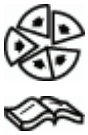

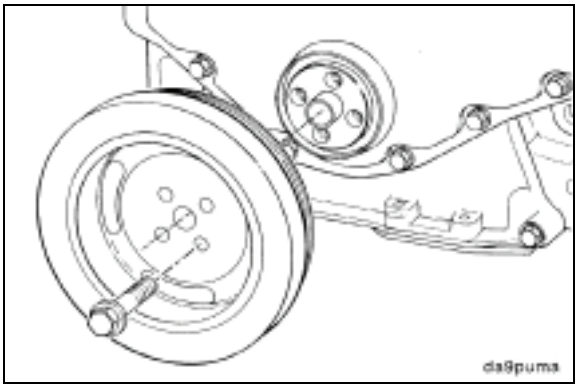

Tighten the vibration damper. Refer to Procedure 001-051 or Procedure 001-052.

Torque Value: 125 N•m [92 ft-lb]



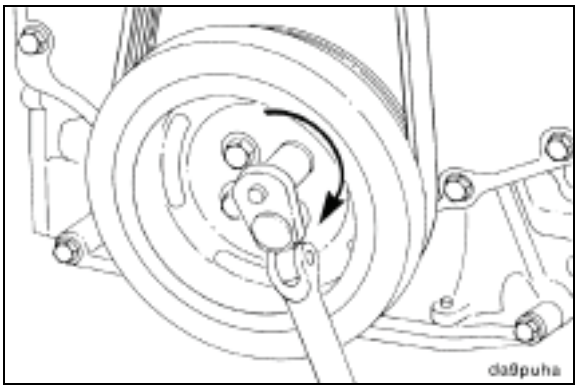

Raise the belt tensioner to install the belt. Refer to Procedure 008-002.

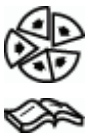



Follow-Up

Lubricating Oil Suction Tube Removal/Installation

Prepare

NOTE: Use a container that can hold at least 20 liters [15 qts] of lubricating oil.

Drain the lubricating oil. Refer to Procedure 007-037.

Remove the lubricating oil pan and gasket. Refer to Procedure 007-025.

Remove



Refer to Lubricating Oil Suction Tube (Block-Mounted) (53-007-035-tr) in ISB and QSB5.9 Base Engine Troubleshooting and Repair Manual, Bulletin Number 3666193.

Remove the lubricating oil suction tube.

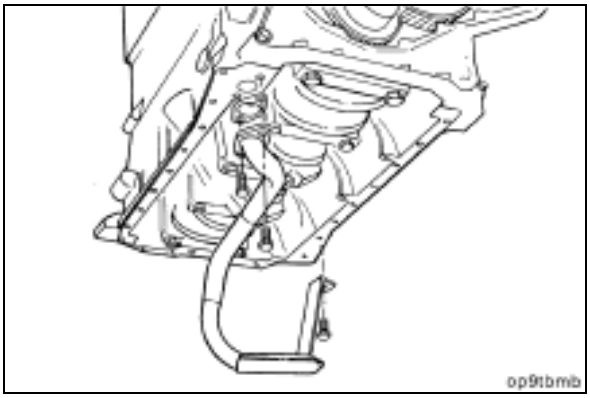

Clean



Clean the gasket surfaces.

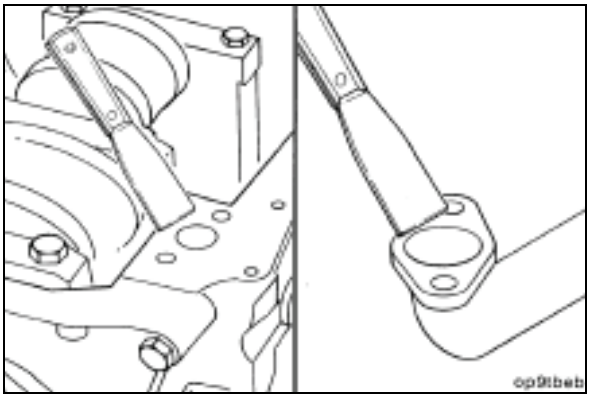

Lubricating Oil Suction Tube Removal/Installation (Cont)

Inspect for Reuse

Inspect the suction tube for cracks.

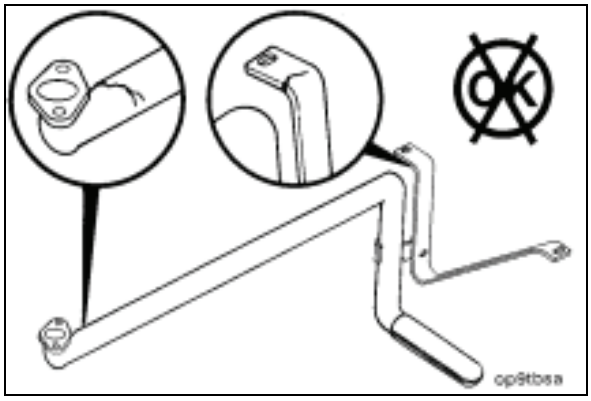

Install

Refer to Lubricating Oil Suction Tube (Block-Mounted) (53-007-035-tr) in ISB and QSB5.9 Base Engine Troubleshooting and Repair Manual, Bulletin Number 3666193.

Install the lubricating oil suction tube and new gasket.

Torque Value: 24 N•m [18 ft-lb]

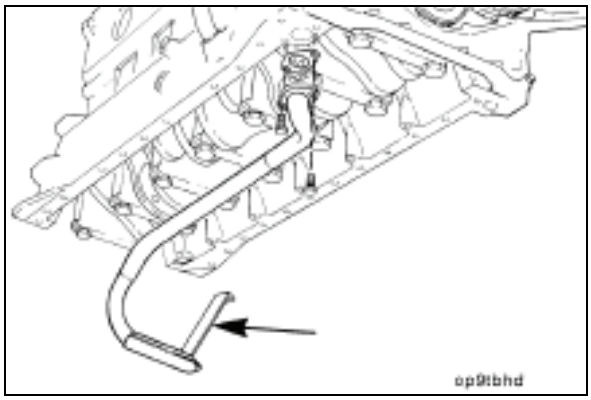

Follow-Up

Install the lubricating oil pan and gasket. Refer to Procedure 007-025.

Install the lubricating oil pan drain plug.

Fill the engine with clean lubricating oil. Operate the engine and check for leaks. Refer to Procedure 007-037.

Stop the engine and check the lubricating oil level with the dipstick. Refer to Procedure 007-043.

Lubricating Oil and Filter Analysis

Inspect

An analysis of used oil can help diagnose internal engine damage and determine if it was caused by one of the following:

Intake air filter malfunction

Coolant leaks

Oil diluted with fuel

Metal particles causing wear

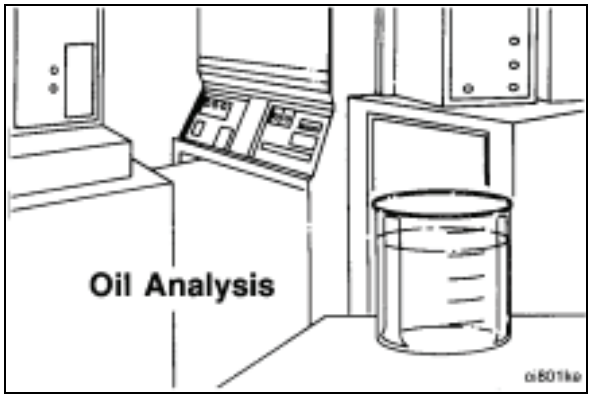

For additional oil analysis information, Refer to Cummins Engine Oil Recommendations, Bulletin 3810340.

NOTE: Do not take apart an engine for repair based solely on the results of an oil analysis. Inspect the oil filters. If the oil filter shows evidence of internal damage, find the source of the problem, and repair the damage. Refer to the appropriate procedure(s) based on the following oil filter inspection.

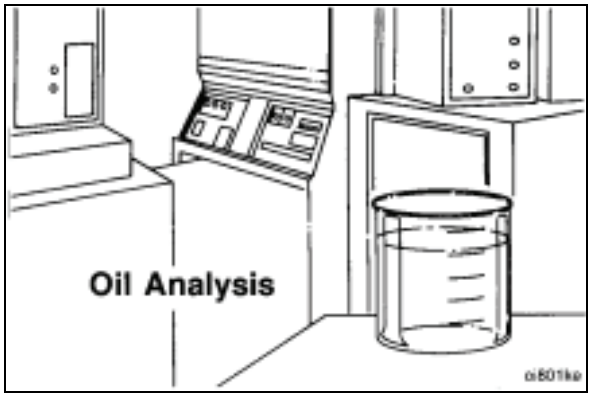

WARNING

Restrain the full flow lubricating oil filter, and carefully cut the filter (upper section of combination filter) open. The filter element spring is under compression and can cause personal injury.

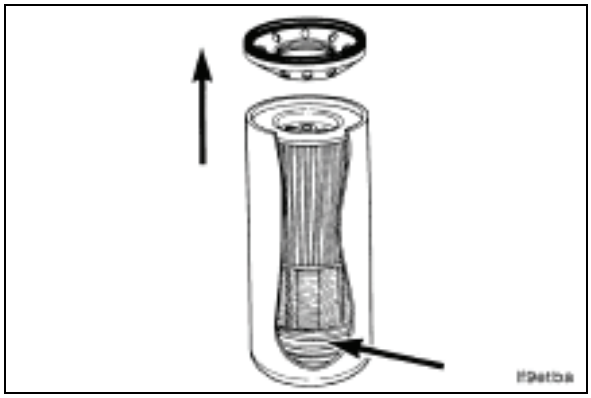

Lubricating Oil and Filter Analysis (Cont)

Use the tube cutter, Part No. 3376579, to open the full-flow oil filter (upper section of the bypass filter).

Inspect the filter element for evidence of moisture or metal particles.

Metal	Possible Source
Copper	Bearings and Bushings
Chromium	Piston Rings
Iron	Cylinder Liners
Lead	Bearing Overlay Material
Aluminum	Piston Wear or Scuffing

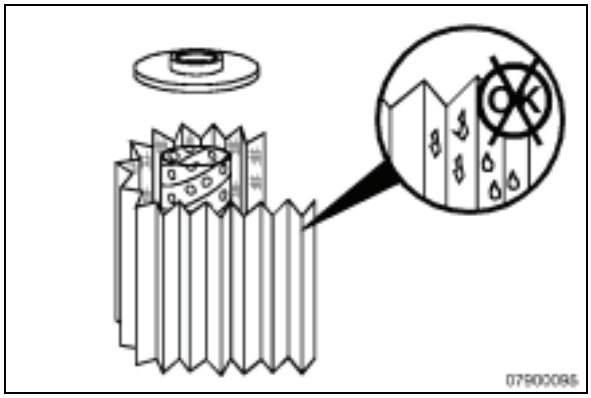

Check Oil Level

Fill the engine with clean lubricating oil to the proper level.

Idle the engine to inspect for leaks at the drain plug.

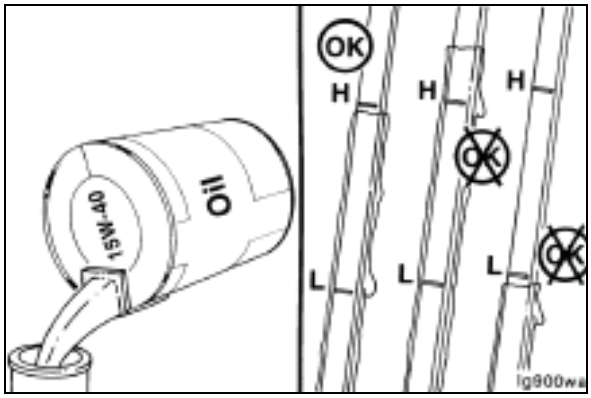

Shut off the engine. Wait approximately 5 minutes to let the oil drain from the upper parts of the engine.

Check the oil level again.

Add oil a necessary to bring the oil level to the “H” (high) mark on the dipstick.

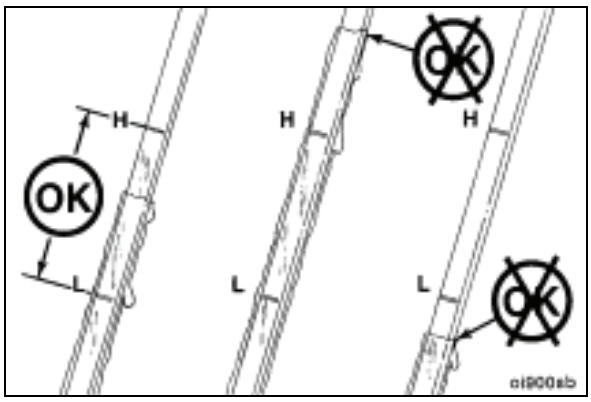

Drain and Fill Lubricating Oil

Drain

WARNING

Some state and federal agencies have determined that used engine oil can be carcinogenic and cause reproductive toxicity. Avoid inhalation of vapors, ingestion, and prolonged contact with used engine oil. If not reused, dispose of in accordance with local environmental regulations.

WARNING

To reduce the possibility of personal injury, avoid direct contact of hot oil with your skin.

NOTE: Use a container that can hold at least 20 liters [21 qt] of lubricating oil.

Operate the engine until the coolant temperature reaches 60°C [140°F]. Shut off the engine. Remove the oil drain plug. Drain the oil immediately to be sure all the oil and suspended contaminants are removed from the engine.

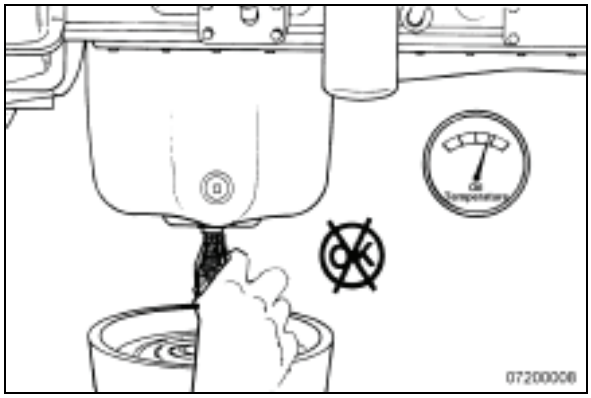

Fill

NOTE: Use a high-quality 15W-40 multiviscosity oil, such as Cummins Premium Blue®, or its equivalent, in Cummins engines. Choose the correct oil for your operating climate as outlined in the Section V.



Drain and Fill Lubricating Oil (Cont)

Fill the engine with clean 15W-40 lubricating oil to the proper level.

NOTE: When filling the oil pan, use the fill tube on the side of the engine rather than on top of the rocker lever cover.

NOTE: If the engine is not equipped with a side-fill, wait at least 3 minutes before measuring the oil level with the dipstick to allow the oil to drain to the pan.

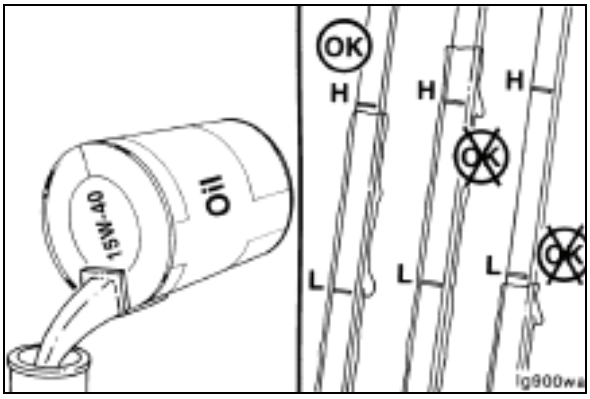

Idle the engine to inspect for leaks at the drain plug.

NOTE: Engine oil pressure must be indicated on the gauge within 15 seconds after starting. If oil pressure is not registered within 15 seconds, shut off the engine immediately to avoid engine damage. Confirm that the correct oil level is in the oil pan.

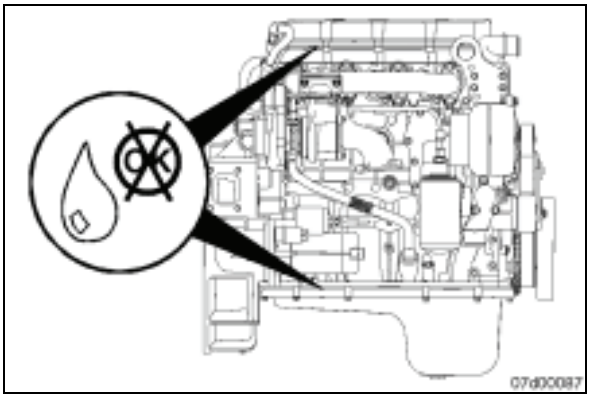

Shut off the engine. Wait approximately 5 minutes to let the oil drain from the upper parts of the engine. Check the level again.

Add oil as necessary to bring the oil level to the H (high) mark on the dipstick.

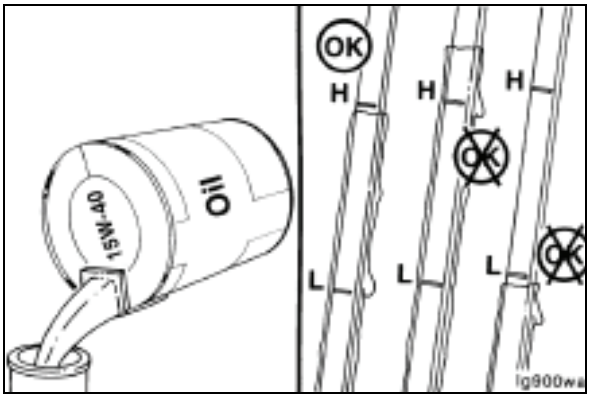

Drain and Fill Lubricating Oil (Cont)

Measure

Remove the plug in the main lubricating oil rifle. The plug is located midway up on the left side of the cylinder block.

Connect a pressure gauge.

NOTE: Remove the OEM pressure sensor, if equipped, to install the gauge.

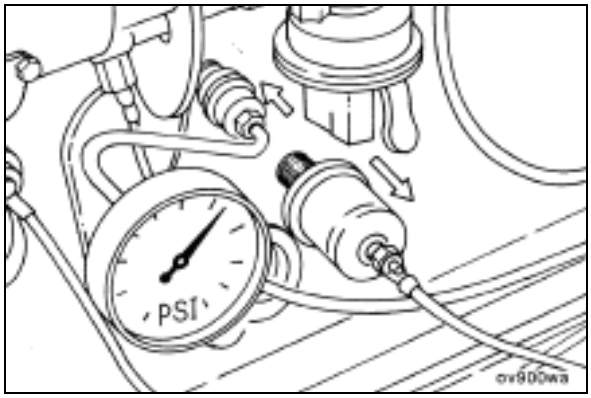

CAUTION

If the lubricating oil pressure does not develop within 15 seconds, shut off the engine to reduce the possibility of internal engine damage.

Start the engine.

Allow the engine to run and achieve operating temperature. Check for oil leaks.

Record the lubricating oil pressure readings at idle rpm.

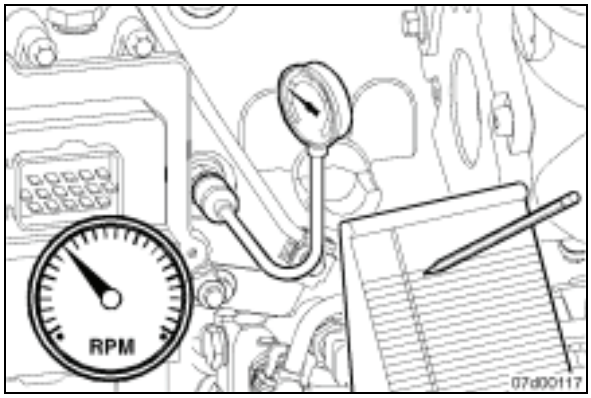

Increase engine speed to rated speed and hold for 30 seconds.

Record the lubricating oil pressure readings at rated rpm.

Minimum oil pressure at low idle: 69 kPa [10 psi]

Minimum oil pressure at rated engine speed: 207 kPa [30 psi]

Speed Sensor or Mag Pick-Up Sensor Removal/Installation

Prepare: Place the fire protection system in a safe mode for engine service.

Place the AUTO/MANUAL rocker switch in the MANUAL position.

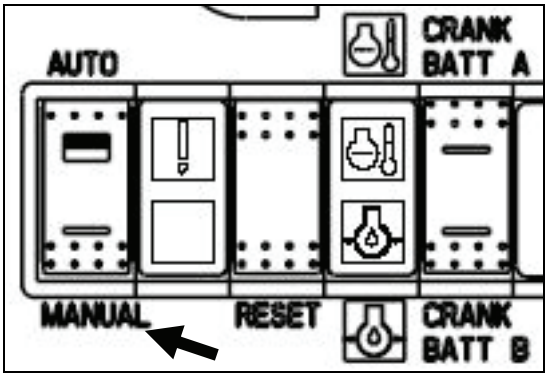

REMOVE BATTERY POWER BEFORE SERVICING ENGINE OR CONTROLS.

For safety reasons, both batteries must be disconnected before performing service on the Firepump Engine or on any of its controls. Before disconnecting the batteries, place the Firepump Controller in its appropriate service position in order to avoid a “Battery Failure” alarm.

Wear safety glasses when disconnecting batteries!

Next, disconnect both batteries at their terminals.

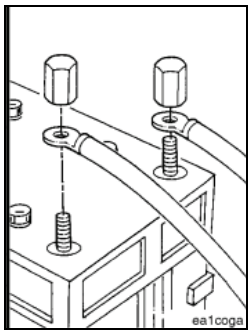

Remove The Mag Pick-Up (Speed Sensor) which is mounted on the bell-housing and located over the flywheel teeth. Both the Speed Switch and the Tachometer (located in the Engine control Panel) use the Mag Pick-Up as the engine speed signal. The resistance on a good Mag Pick-Up should be approximately 265 Ohms.

Remove the 2-wire cable that is connected to it. (The cable wires are not polarity sensitive, so it makes no difference how the wires are connected to it). Remove the Mag Pick-Up by turning it out counter-clockwise.

Speed Sensor or Mag Pick-Up Sensor Removal/Installation (Cont)

When installing a new Mag Pick-Up, first check that the threads in the bell-housing are clean. Any burrs may prevent proper installation.

Install the Mag Pick-Up by threading it into the bell-housing until its tip is bottomed out against the flywheel. Then back out the Mag Pick-Up ½ turn. Reconnect the 2-wire cable. Reconnect the batteries.

For safety reasons, both batteries must be re-connected before putting the engine and fire protection system controller back in service.

Wear safety glasses when reconnecting batteries!

Reconnect the batteries at their terminals after all service work has been completed.

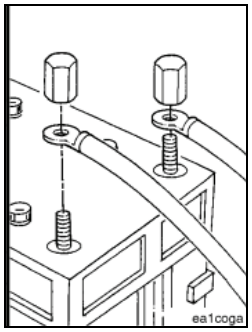

Place the AUTO/MANUAL rocker switch in the AUTO position on the fire pump panel.

Return the fire protection system controller back to operating status.

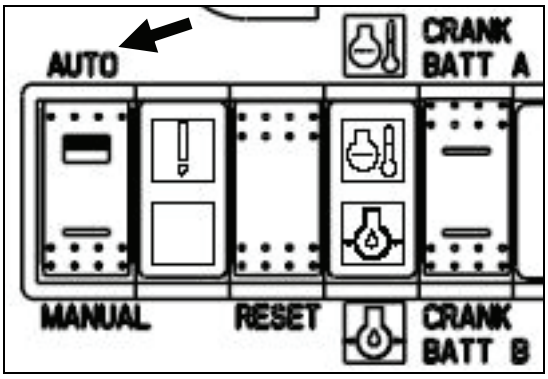

Tachometer Removal/Installation

Prepare: Place the fire protection system in a safe mode for engine service.

Place the AUTO/MANUAL rocker switch in the MANUAL position.

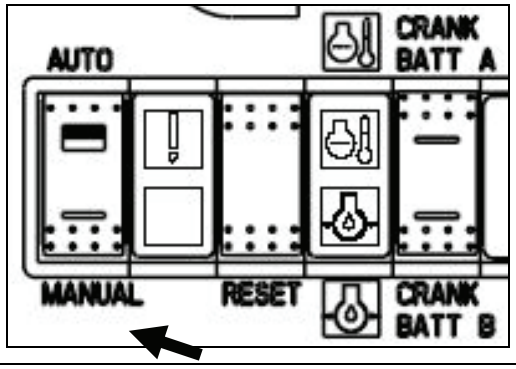

REMOVE BATTERY POWER BEFORE SERVICING ENGINE OR CONTROLS.

For safety reasons, both batteries must be disconnected before performing service on the Firepump Engine or on any of its controls. Before disconnecting the batteries, place the Firepump Controller in its appropriate service position in order to avoid a “Battery Failure” alarm.

Wear safety glasses when disconnecting batteries!

Next, disconnect both batteries at their terminals.

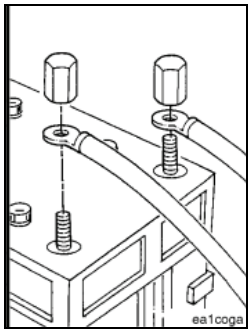

To remove the tachometer, open the cover of the Engine Control Panel. Disconnect the 3-wire connector that is plugged into the back of the tachometer. Next, remove the tachometer’s retaining bracket.

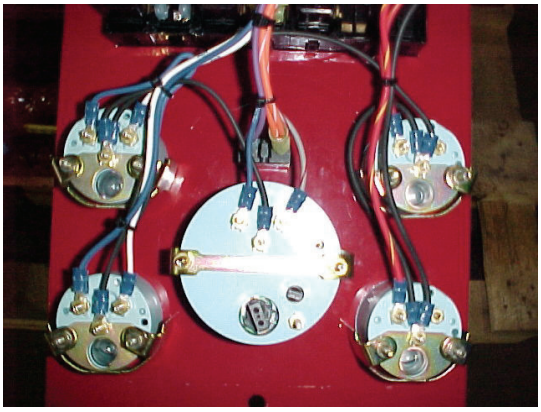

Install the new tachometer in reverse order.

Refer to instructions for Tachometer Calibration in this section.

Tachometer Removal/Installation (Cont)

For safety reasons, both batteries must be re-connected before putting the engine and fire protection system controller back in service.

Wear safety glasses when reconnecting batteries!

Reconnect the batteries at their terminals after all service work has been completed.

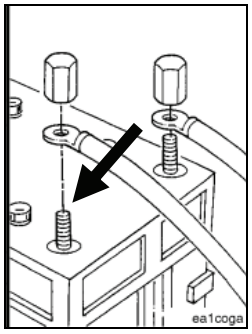

Place the AUTO/MANUAL rocker switch in the AUTO position.

Return the fire protection system controller back to operating status.

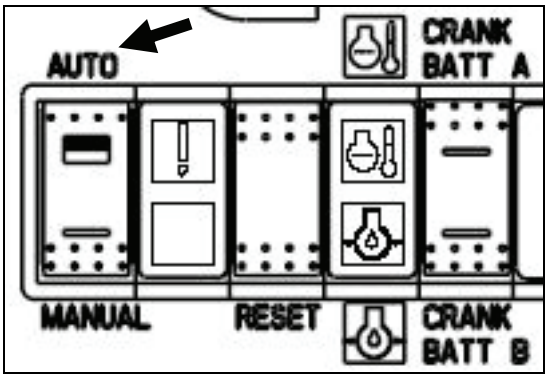

Overspeed Switch Removal/Installation

Prepare

Place the fire protection system in a safe mode for engine service.

Place the AUTO/MANUAL rocker switch in the MANUAL position.

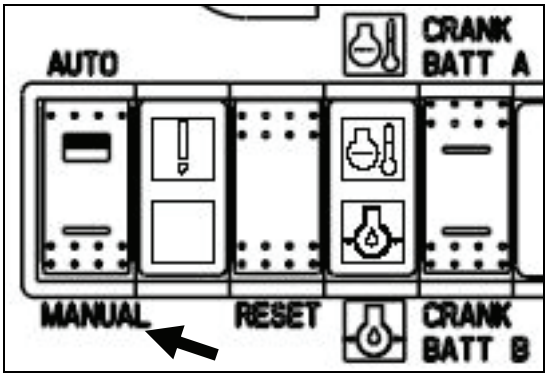

REMOVE BATTERY POWER BEFORE SERVICING ENGINE OR CONTROLS

For safety reasons, both batteries must be disconnected before performing service on the Firepump Engine or on any of its controls. Before disconnecting the batteries, place the Firepump Controller in its appropriate service position in order to avoid a “Battery Failure” alarm.

Wear safety glasses when disconnecting batteries!

Next, disconnect both batteries at their terminals.

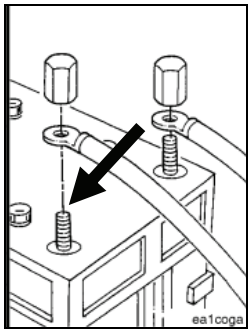

Remove

Begin removing the Speed Switch by first documenting the wires that are connected to its terminals. If necessary, place a piece of masking tape on each wire, noting the terminal number that it’s connected to.

Once all of the wires are removed, the Speed Switch can be removed from the Engine Control Panel by removing the four screws that are securing it to the panel. Each screw is nutted to the back of the Control Panel. In order to access the four retaining nuts, the Control Panel may have to be loosened from the engine frame to allow clearance for a wrench.

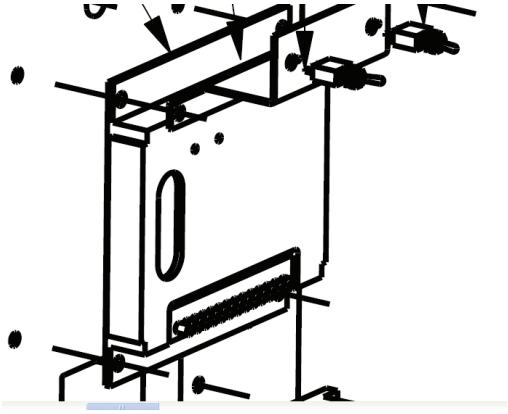

Overspeed Switch Removal/Installation (Cont)

Install

Once the Speed Switch is removed, install the new one in reverse order. All Speed Switches are factory calibrated for the specific Firepump Engine model that it's intended to be used with. No adjustments will be necessary.

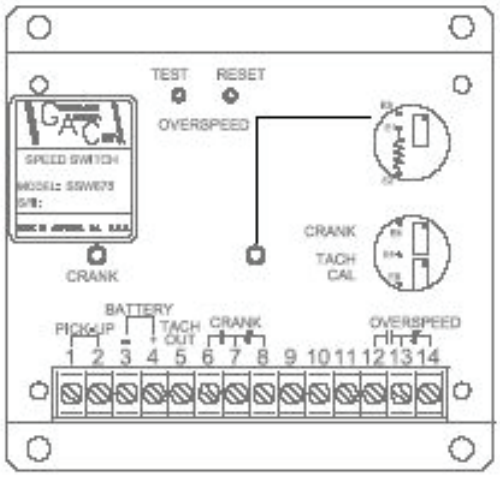

Follow-up

For safety reasons, both batteries must be re-connected before putting the engine and fire protection system controller back in service.

Wear safety glasses when reconnecting batteries!

Reconnect the batteries at their terminals after all service work has been completed.

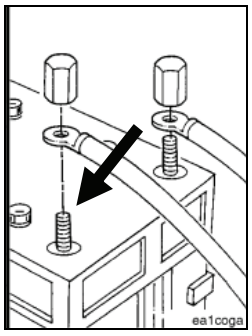

Place the AUTO/MANUAL rocker switch in the AUTO position.

Return the fire protection system controller back to operating status.

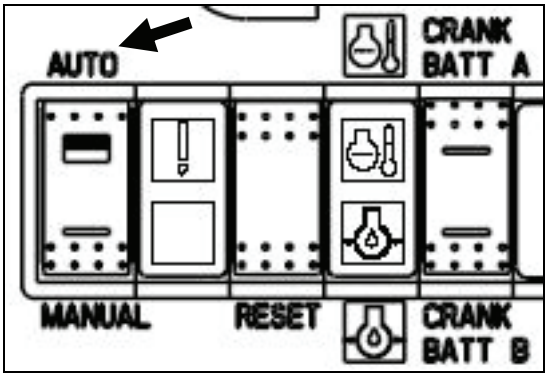

Tachometer Calibration

After a new tachometer has been installed, it will be necessary to calibrate it. In order to do this, the engine must be started and verified that it is operating at rated speed.

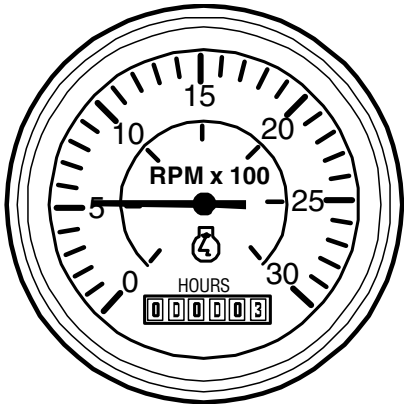

With a small flat-blade screwdriver, turn the trim pot, located on the back of the tachometer, until its indicator agrees with the engine speed.

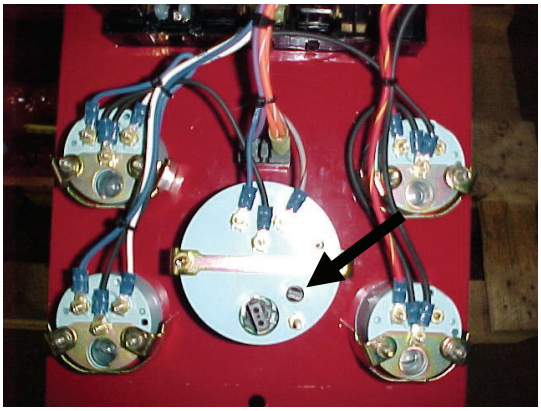

This Page Intentionally Left Blank

Section 8 – Service Literature

Section Contents

Page

Additional Service Literature 8-3

Service Literature Ordering Location 8-4

THIS PAGE INTENTIONALLY LEFT BLANK

Additional Service Literature

General Information

The following publications can be purchased at your selected Service Literature Ordering Location:

Bulletin	Title of Publication
3379000	Air For Your Engine
3379001	Fuels for Cummins Engines
3379009	Operation - Cold Weather
3666017	B Series Shop Manual
3666087	Troubleshooting and Repair Manual, B3.9 and B5.9 Series Engines
3666109	Alternative Repair Manual, B and C Series Engines
3666132	Coolant Requirements and Maintenance
3810340	Cummins Engine Oil Recommendations

Service Literature Ordering Location

Contact Information

Region	Ordering Location
United States and Canada	Cummins Distributors 1-800-DIESELS or (1-800-343-7357) **OR** Credit Cards at 1-800-646-5609 **OR** Order online at www.powerstore.cummins.com
U.K., Europe, Mid-East, Africa, and Eastern European Countries	Cummins Engine Co., Ltd. Royal Oak Way South Daventry Northants, NN11 5NU, England
South and Central America (excluding Brazil and Mexico)	Cummins Americas, Inc. 16085 N.W. 52nd Avenue Hialeah, FL 33104
Brazil and Mexico	Cummins Inc. International Parts Order Dept., MC 40931 Box 3005 Columbus, IN 47202-3005
Far East (excluding Australia and New Zealand)	Cummins Diesel Sales Corp. Literature Center 8 Tanjong Penjuru Jurong Industrial Estate Singapore
Australia and New Zealand	Cummins Diesel Australia Maroondah Highway, P.O.B. 139 Ringwood 3134 Victoria, Australia

Section 9 – Service Assistance

Section Contents

Page

Routine Service and Parts 9-3

Problem Solving 9-4

THIS PAGE INTENTIONALLY LEFT BLANK

Routine Service and Parts

Personnel at Cummins Authorized Repair Locations can assist you with the correct operation and service of your engine. Cummins has a worldwide service network of more than 5,000 Distributors and Dealers who have been trained to provide sound advice, expert service, and complete parts support. Check the telephone directory yellow pages or refer to the directory in this section for the nearest Cummins Authorized Repair Location.

Emergency and Technical Service

The Cummins Customer Assistance Center provides a 24-hour, toll free telephone number to aid in technical and emergency service when a Cummins Authorized Repair Location can not be reached or is unable to resolve an issue with a Cummins product.

If assistance is required, call Toll-Free:

1-800-DIESELS (1-800-343-7357)

Includes all 50 states, Bermuda, Puerto Rico, Virgin Islands, and the Bahamas.

Outside of North America contact your Regional Office. Telephone numbers and addresses are listed in the International Directory.

See also www.cummins.com



ai800vv

Problem Solving

Normally, any problem that arises with the sale, service, or repair of your engine can be handled by a Cummins Authorized Repair Location in your area. Refer to the telephone directory yellow pages for the one nearest you. If the problem has not been handled satisfactorily, follow the steps outlined below:

If the disagreement is with a Dealer, talk to the Cummins Distributor with whom he has his service agreement.

If the disagreement is with a Distributor, call the nearest Cummins Division or Regional Office; however, most problems are solved below the Division or Regional office level. Telephone numbers and addresses are listed in this section.

Before calling, write down the following information:

- Engine model and serial number
- Type and make of equipment
- Total kilometers [miles] or hours of operation
- Warranty start date
- Nature of problem
- Summary of the current problem arranged in the order of occurrence
- Name and location of the Cummins Distributor or Dealer

If a problem can not be resolved satisfactorily through your Cummins Authorized Repair Location or Division Office, write to:

Cummins Customer Assistance Center - 41403,

Cummins Engine Company, Inc.,

Box 3005, Columbus, IN 47202-3005

Section 10 – Maintenance Specifications

Section Contents

Page

General Engine Data....10-3
Fuel System Specifications....10-4
Lubricating Oil System Specifications....10-4
Cooling System Specifications....10-4
Air Intake System Specifications....10-5
Exhaust System Specifications....10-5
Electrical System Specifications....10-5
Cummins/Fleetguard® Liquid Filter Specifications....10-6
Fuel Recommendations and Specifications....10-6
Lubricating Oil Recommendations and Specifications....10-7
Coolant Recommendations and Specifications....10-8
Engine Component Torque Values....10-9
Sealants....10-10
Capscrew Markings and Torque Values....10-11

THIS PAGE INTENTIONALLY LEFT BLANK

General Engine Data

NOTE: The following engine and system specification data is extracted from the curves and data sheets that were current when this document was prepared.

Refer to the applicable performance curve drawing and the data sheet drawing for the most current information. Contact Cummins Fire Power at 920-337-9750 if current information is required.

Refer to the base engine troubleshooting and repair manual for base engine coverage (see Service Literature in Section 8).

Model	Performance Curve Drawing	Data Sheet Drawing
CFP59-F10	9738	9739
CFP59-F15	9734	9735
CFP59-F20	9738	9739
CFP59-F25	9734	9735
CFP59-F40	9738	9739
CFP59-F45	9736	9737
CFP59-F50	9738	9739
CFP59-F55	9740	9741

Model	Cummins Engine Co. Base Engine	Cummins Base Engine Fuel Rating	Installation Drawing
CFP59-F10	6BTA5.9G3	FR91231 / FR91232	8704 (see Section 13)
CFP59-F15	6BT-C165	FR90026	8705 (see Section 13)
CFP59-F20	6BTA5.9G3	FR91231 / FR91232	8704 (see Section 13)
CFP59-F25	6BT-C165	FR90026	8705 (see Section 13)
CFP59-F40	6BTA5.9G3	FR91231 / FR91232	8704 (see Section 13)
CFP59-F45	6BTA-C174	FR91093	8706 (see Section 13)
CFP59-F50	6BTA5.9G3	FR91231 / FR91232	8704 (see Section 13)
CFP59-F55	6BTA5.9	FR9374	8713 (see Section 13)

Type	4 Cycle; In-Line; 6 Cylinder
Firing Order	1-5-3-6-2-4
Rotation, Viewed from the Front of the Engine	Clockwise
Compression Ratio:	16.5:1
Valves per cylinder: Inlet/Exhaust	1 / 1
Configuration Number	D403050DX02
Fuel System	Stanadyne DB4 DI
Aspiration	Turbocharged, Aftercooled

	Metric	US
Bore	102 mm	4.02 in
Stroke	120 mm	4.72 in.
Displacement	5.9 liter	360 $in.^3$
Intake Valve Clearance	0.25 mm	0.010 in
Exhaust Valve Clearance	0.51 mm	0.020 in
Dry Weight	443 kg	977 lb
Wet Weight	516 kg	1138 lb

Fuel System Specifications

Fuel	Type Number 2 Diesel Only
Recommended primary fuel filter	Fleetguard 3903640

	Metric	US
Minimum supply line size	6.4 mm D.	0.25 in. D.
Minimum drain line size	6.4 mm D.	0.25 in. D.
Maximum fuel line length between supply tank & fuel pump	12.2 m	40 ft.
Maximum fuel height above C/L crankshaft	2030 mm	80 in.
Maximum restriction @ lift pump-inlet - with clean filter	102 mm Hg	4 in. Hg
Maximum restriction @ lift pump-inlet - with dirty filter	203 mm Hg	8 in. Hg
Maximum return line restriction - without check valves	508 mm Hg	20 in. Hg
Minimum fuel tank vent capability	0.34 m^3/hr	12 ft^3/hr
Maximum fuel temperature @ lift pump inlet	71 ^oC	160 ^oF

Lubricating Oil System Specifications

Recommended lube oil filter	Fleetguard 3908616

	Metric	US
Oil pressure range at rated	276-414 kPa	40-60 PSI
Oil capacity of pan (high - low)	14.2-12.3 liter	3.8-3.3 U.S. Gal
Total system capacity	16.4 liter	4.3 U.S. Gal.

Cooling System Specifications

	Metric	US
Maximum raw water working pressure range at heat exchanger	414 kPa	60 PSI
Recommended minimum water supply pipe size to heat exchanger	19.1 mm D.	0.75 in. D.
Recommended minimum water discharge pipe size from heat exchanger	25.4 mm D.	1.0 in. D.
Coolant water capacity (engine side)	9.9 liter	2.6 U.S. Gal.
Modulating thermostat range	82-95 ^oC	180-203 ^oF
Minimum raw water flow with water temperatures to 90 ^oF (32 ^oC)	1.26 liter/s	20 U.S. GPM

Air Intake System Specifications

NOTE: Engine intake air must be filtered to prevent dirt and debris from entering the engine. If intake air piping is damaged or loose, unfiltered air will enter the engine and cause premature wear.

Recommended air cleaner element	(Standard) K&N RU5045 (Optional) Donaldson B105006

	Metric	US
Maximum temperature rise between ambient air and engine air inlet	15 °C	30 °F
Maximum inlet restriction with dirty filter	635 mm H_2O	25 in. H_2O

Exhaust System Specifications

	Metric	US
Maximum exhaust back pressure imposed by complete exhaust system	10.2 kPa	40.8 in. H_2O
Exhaust pipe size normally acceptable	76 mm D.	3 in. D.

Electrical System Specifications

Start Circuit

The start circuit consists of a single starter motor and redundant starter control relays as well as using redundant power sources either 12 V standard or 24 V optional comprised of 12 V wet type storage batteries (optional at shipment).

The battery, starter and starter solenoid positive terminals are booted with a non-conducting cover or otherwise insulated from unintended grounding. Battery cable leads from the batteries to the designated connection points in the starting circuit are minimum 6.53 mm D. (No. 2 AWG), neoprene or rubber insulated with a 1.5 mm (0.060 in.) minimum insulation thickness rated 80°C (176 °F) minimum. The starter and starter solenoid are all metal enclosed.

Wiring for automatic starting (negative ground)	Standard
Reference wiring diagram	10423 (see Section 13)
B.C.I. Group Size	4D

	12V	24V
Minimum recommended battery cold cranking amperes (CCA)(1)	1080 Amps	540 Amps
Minimum recommended battery reserve capacity	400 Minutes	800 Minutes
Maximum resistance of starting circuit	0.002 Ohms	0.004 Ohms
Typical cranking speed	120 RPM	120 RPM
Alternator (standard), internally regulated	95 Amps	45 Amps
Battery Cable Size (Metric) (For less than 1.5 meters long)	10.6 mm D.	10.6 mm D.
Battery Cable Size (US) (For less than 5 feet long)	00 AWG	00 AWG

(1) Cold soak at -18 °C (0 °F) or above

Cummins/Fleetguard® Liquid Filter Specifications

General Information

Fleetguard®/Nelson is a subsidiary of Cummins Inc. Fleetguard®/Nelson filters are developed through joint testing at Cummins and Fleetguard®/Nelson. Fleetguard®/Nelson filters are standard on new Cummins engines. Cummins Inc. recommends their use.

Fleetguard®/Nelson products meet all Cummins Source Approval Test standards to provide the quality filtration necessary to achieve the engine's design life. If other brands are substituted, the purchaser should insist on products that the supplier has tested to meet Cummins high-quality standards.

Cummins can not be responsible for problems caused by non-genuine filters that do not meet Cummins performance or durability requirements.

Fuel Recommendations and Specifications

Fuel Recommendations



Do not mix gasoline, alcohol, or gasohol with diesel fuel. This mixture can cause an explosion.



Due to the precise tolerances of diesel injection systems, it is extremely important that the fuel be kept clean and free of dirt or water. Dirt or water in the system can cause severe damage to both the fuel pump and the fuel injectors.

Use only number 2 diesel (ASTM no. 2D) fuel.

Any adjustment to compensate for reduced performance with a fuel system using alternate fuel is not warrantable.

Additional information for fuel recommendations and specifications can be found in Fuel for Cummins Engines, Bulletin No. 3379001. See Section 8, Service Literature for ordering information.

Lubricating Oil Recommendations and Specifications

Oil Performance Recommendations

Using quality engine lubricating oils, along with appropriate oil drain and filter change intervals, is a critical factor in maintaining engine performance and durability. Refer to Service Literature in Section 9 for reference to related Cummins service bulletins.

Cummins Engine Company, Inc. recommends the use of a high-quality SAE 15W-40 heavy-duty engine oil (such as Cummins Premium Blue®), which meets the American Petroleum Institute (API) performance classification CH4/SG.

A sulfated ash limit of 1.0 mass percent is suggested for optimum valve and piston deposit and oil consumption control. The sulfated ash must not exceed 1.85 mass percent.

New Engine Break-In Oils

Do not use special “break-in” lubricating oils for new or rebuilt Cummins engines. Use the same type of oil during the “break-in” as that which is used in normal operation.

Recommended Oil Change Intervals

The oil change interval for turbocharged engines is every 6 months or 250 hours.

Oil Viscosity Recommendations

The use of multiviscosity lubricating oil has been found to improve oil consumption control and improve engine cranking in cold temperatures while maintaining lubrication at high operating temperatures.

While 15W-40 oil is recommended for most climates, refer to the accompanying table for oil viscosity recommendations for extreme climates.

NOTE: Limited use of low-viscosity oils, such as 10W-30, can be used for easier starting and providing sufficient oil flow at ambient temperatures below -35°C [23°F]. However, continuous use of low viscosity oils can decrease engine life because of wear. Refer to the accompanying chart.

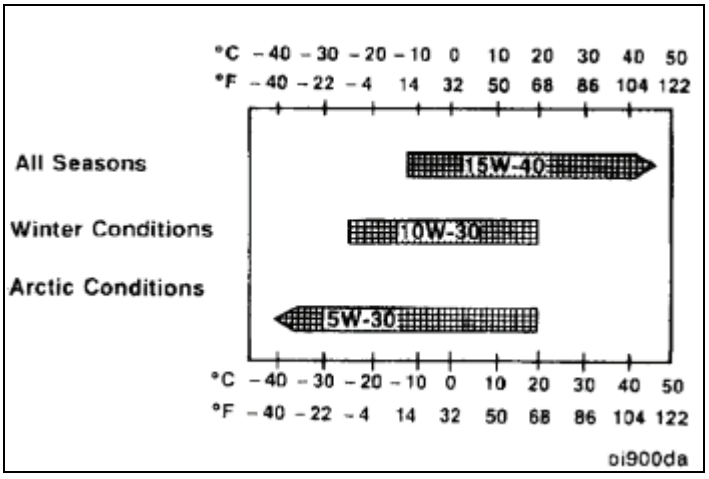

Coolant Recommendations and Specifications

General Information

Heavy-duty diesel engines require a balanced coolant mixture of water and antifreeze. Drain and replace the mixture every 1 year or 1500 hours of operation (whichever occurs first) to eliminate buildup of harmful chemicals.

Antifreeze is essential in any climate. It broadens the operating temperature range by lowering the coolant freezing point and by raising its boiling point. Do not use more than 50-percent antifreeze in the mixture unless additional freeze protection is required. Never use more than 68-percent antifreeze under any condition.

Use soft water in the coolant mixture. Contaminants in hard water neutralize the corrosion inhibitor components. Water must not exceed 300-ppm hardness or contain more than 100 ppm of either chloride or sulfate.

Specifications

Use low-silicate antifreeze that meets ASTM4985 test (GM6038M spec.) criteria.

Refer to Service Literature in Section 8 for reference to related Cummins service bulletins.

Concentration

Antifreeze must be used in any climate for both freeze and boiling point protection. Cummins recommends a 50-percent concentration level (40-percent to 60-percent range) of ethylene glycol or propylene glycol in most climates. Antifreeze at 68-percent concentration provides the maximum freeze protection and must never be exceeded under any condition. Antifreeze protection decreases above 68 percent.

Ethylene Glycol	Propylene Glycol
40% = -23°C [-10°F]	**40% = -21°C [-6°F]**
50% = -37°C [-34°F]	**50% = -33°C [-27°F]**
60% = -54°C [-65°F]	**60% = -49°C [-56°F]**
68% = -71°C [-90°F]	**68% = -63°C [-82°F]**

Concentration Testing

Antifreeze concentration must be checked using a refractometer (such as Fleetguard® Part No. CC2800). “Floating ball” types of density testers or hydrometers are not accurate enough for use with heavy-duty diesel cooling systems.

Engine Component Torque Values

Torque Table

Component	Wrench Size	N•m	ft-lb or in-lb
After cooler Mounting	10 mm	24	18 ft-lb
After cooler Water Hose Clamp	8 mm	5	44 in-lb
Alternator Link (Delco 10-15 SI)	13 mm	24	18 ft-lb
Alternator Link (Delco 20-27 SI)	3/4 in	43	32 ft-lb
Alternator Mtg. Bolt 10-15 SI	15 mm	43	32 ft-lb
Alternator Mtg. 27 SI	18 mm	77	57 ft-lb
Alternator Support (Upper)	10 mm	24	18 ft-lb
Belt Tensioner Flat Bracket	Allen 5 mm	24	18 ft-lb
Belt Tensioner Mounting	15 mm	43	32 ft-lb
Crankshaft Damper and Pulley	15 mm	137	101 ft-lb
Crossover Clamp	5/16 in	5	44 in-lb
Tee Bolt Type Clamp	11 mm	8	71 in-lb
Exhaust Outlet Pipe, V Band Clamp	7/16 in	8	71 in-lb
Fuel Filter	75 to 85 mm	Install as specified by filter manufacturer	
Fuel Filter Adapter Nut	24 mm	32	24 ft-lb
Lubricating Oil Filter	75 to 85 mm	3/4 Turn after Contact	
Lubricating Oil Cooler Assembly	10 mm	24	18 ft-lb
Lubricating Oil Pan Drain Plug (steel)	17 mm	80	59 ft-lb
Lubricating Oil Pan Drain Plug (aluminum)	17 mm	55	41 ft-lb
Lubricating Oil Pan Heater Plug	27 mm	80	59 ft-lb
Lubricating Oil Pressure Regulator Plug	19 mm	80	59 ft-lb
Starter Mounting	10 mm	43	32 ft-lb
Thermostat Housing	10 mm	24	18 ft-lb
Water Inlet Connection	15 mm	43	32 ft-lb
Water Pump Mounting	13 mm	24	18 ft-lb
Rocker Lever Cover	15 mm	24	18 ft-lb
Water-in-Fuel Sensor	19 mm	Hand-Tighten	
Top-Load Filter Lid	10 mm	Hand-Tighten	

Sealants

General Information

Use either the sealants listed below or sealants containing equivalent properties.

Item Description	Sealing Method
Pipe Plugs	Precoated teflon or pipe sealer
Cup Plugs	Loctite 277 or 11,264
O-Rings	Lubriplate™ 105
Rear Camshaft Expansion Plug	Precoated or Loctite 59,241 liquid teflon
Fuel Block Mounting Studs	Loctite 609
Turbocharger Drain in Block	Loctite 277 or 11,264
Front Seal in Gear Cover	Loctite 277 or 11,264
Rear Seal in Rear Cover	No sealant
Oil Pan at T-Joint	Three-Bond™ 1207C (Cummins Part Number 3823494)

Capscrew Markings and Torque Values

General Information

CAUTION

Always use a capscrew of the same measurement and strength as the capscrew being replaced. Using the wrong capscrews can result in engine damage.

Always use the torque values listed in the following tables when specific torque values are not available.

Do not use the torque values in place of those specified in other sections of this manual.

The torque values in the table are based on the use of lubricated threads.

When the ft-lb value is less than 10, convert the ft-lb value to in-lb to obtain a better torque with an in-lb torque wrench. Example: 6 ft-lb equals 72 in-lb.

Metric Capscrew Identification

Sample:	M8-1.25 x 25		
Value:	M8	1.25	X 25
Meaning:	Major thread diameter in millimeters	Distance between threads in millimeters	Length in millimeters

Metric Capscrew Head Markings

Metric capscrews and nuts are identified by the grade number stamped on the head of the capscrew or on the surface of the nuts.

Commercial Steel Class	**8.8**	**10.9**	**12.9**
Capscrew Head Markings		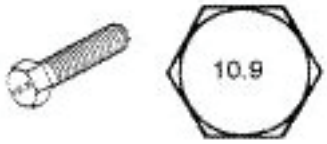	

Metric Capscrew Torque Values

Class:	**8.8**				**10.9**				**12.9**			
Diameter	**Cast Iron**		**Aluminum**		**Cast Iron**		**Aluminum**		**Cast Iron**		**Aluminum**	
mm	**N•m**	**ft-lb**	**N•m**	**ft-lb**	**N•m**	**ft-lb**	**N•m**	**ft-lb**	**N•m**	**ft-lb**	**N•m**	**ft-lb**
6	9	5	7	4	13	10	7	4	14	9	7	4
7	14	9	11	7	18	14	11	7	23	18	11	7
8	23	17	18	14	33	25	18	14	40	29	18	14
10	45	33	30	25	65	50	30	25	70	50	30	25
12	80	60	55	40	115	85	55	40	125	95	55	40
14	125	90	90	65	180	133	90	65	195	145	90	65
16	195	140	140	100	280	200	140	100	290	210	140	100
18	280	200	180	135	390	285	180	135	400	290	180	135
20	400	290	—	—	550	400	—	—	—	—	—	—

US Customary Capscrew Identification

Sample:	5/16 x 18 x 1-1/2		
Value:	5/16	18	1-1/2
Meaning:	Major thread diameter in inches	Number of threads per inch	Length in inches

U.S. Customary Capscrew Head Markings

U.S. Customary capscrews are identified by radial lines stamped on the head of the capscrew.

SAE Grade 5 **w/ three lines**	**SAE Grade 8**
	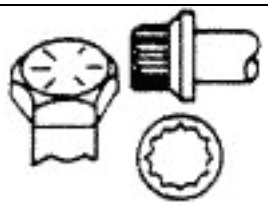

U.S. Customary Capscrew Torque Values

Grade	**SAE Grade 5**				**SAE Grade 8**			
Capscrew Body Size	**Cast Iron**		**Aluminum**		**Cast Iron**		**Aluminum**	
	N•m	**ft-lb**	**N•m**	**ft-lb**	**N•m**	**ft-lb**	**N•m**	**ft-lb**
1/4-20	9	7	8	6	15	11	8	6
1/4-28	12	9	9	7	18	13	9	7
5/16-18	20	15	16	12	30	22	16	12
5/16-24	23	17	19	14	33	24	19	14
3/8-16	40	30	25	20	55	40	25	20
3/8-24	40	30	35	25	60	45	35	25
7/16-14	60	45	45	35	90	65	45	35
7/16-20	65	50	55	40	95	70	55	40
1/2-13	95	70	75	55	130	95	75	55
1/2-20	100	75	80	60	150	110	80	60
9/16-12	135	100	110	80	190	140	110	80
9/16-18	150	110	115	85	210	155	115	85
5/8-11	180	135	150	110	255	190	150	110
5/8-18	210	155	160	120	290	215	160	120
3/4-10	325	240	255	190	460	340	255	190
3/4-16	365	270	285	210	515	380	285	210
7/8-9	490	360	380	280	745	550	380	280
7/8-14	530	390	420	310	825	610	420	310
1-8	720	530	570	420	1100	820	570	420
1-14	800	590	650	480	1200	890	650	480

Section 11 – Warranty Information

LIMITED WARRANTY

EXCLUSIVE EXPRESS LIMITED WARRANTY: Cummins NPower, LLC ("CNP"), expressly warrants to the original end consumer only that, for a period not to exceed the earlier of two (2) years or 2000 hours of use from the start-up date (or, if the original end consumer fails to register as purchaser with CNP, six (6) months from CNP shipment date), the diesel fire pump drivers, manufactured and sold by CNP, shall be free from defects in material and workmanship when used and serviced in accordance with the Operations and Maintenance manual for the applicable Cummins Fire Pump engine model (the "Exclusive Warranty"). The Exclusive Warranty is non-transferable and shall immediately terminate and be of no further force or effect upon the sale, lease, assignment, transfer or other disposition by an original end consumer of a Cummins Fire Pump engine that contains a diesel fire pump driver covered by this Exclusive Warranty. Nothing contained herein shall be construed to extend the Exclusive Warranty, and the Exclusive Warranty shall not be extended, to:

- Maintenance, adjustment, installation or start-up costs;
- Diesel fire pump driver failure due to normal wear, accident, misuse, abuse, neglect, improper installation or a defect attributable to a Cummins Fire Pump engine;
- Alterations or modifications not authorized in writing by CNP;
- Additional components added to a diesel fire pump driver package subsequent to shipment of the engine; or
- Starting batteries and heaters.

DISCLAIMER OF WARRANTIES: Except for the Exclusive Warranty provided above, which is in lieu of all other express and implied warranties, CNP EXPRESSLY DISCLAIMS ALL EXPRESS AND IMPLIED WARRANTIES, INCLUDING THE IMPLIED WARRANTIES OF MERCHANTABILITY AND FITNESS FOR A PARTICULAR PURPOSE.

LIMITATION AND EXCLUSION OF REMEDIES: All claims under this Exclusive Warranty shall be deemed waived by the original end consumer if not submitted to CNP or an authorized distributor within thirty (30) days of initial discovery that a diesel fire pump driver is not conforming to the Express Warranty. The original end consumer's remedy under this Exclusive Warranty is limited, in CNP's reasonable discretion, to repair, replacement or other appropriate adjustment of a non-conforming diesel fire pump driver determined, upon CNP's inspection, to have been properly installed, maintained and operated in accordance with the Operations and Maintenance manual furnished by CNP. IN ANY EVENT, CNP SHALL NOT BE LIABLE FOR INCIDENTAL OR CONSEQUENTIAL DAMAGES.

The Cummins Industrial Warranty covers the base engine for a period of time not to exceed the earlier of two (2) years or 2000 hours of operation from the date of delivery and start-up of the engine. Reference bulletin numbers 3381321 US/Canada & 3381322 Outside US/Canada. Cummins Fire Power components are warranted for a period of time not to exceed the earlier of two (2) years or 2000 hours of operation from the start-up date of the fire pump system, and the coverage includes travel time and mileage for the first year of the Limited Warranty, and repair or replacement of parts and reasonable cost of labor. The Cummins Fire Power Limited Warranty does not cover failures or damage due to abuse or neglect and including, but not limited to: shipping damage, improper storage, improper installation, unauthorized modification or lack of maintenance. **Cummins Fire Power is not responsible for incidental or consequential damages.**

THIS PAGE INTENTIONALLY LEFT BLANK

Section 12 – Troubleshooting

Section Contents

Page

Troubleshooting Procedures and Techniques 12-3
Troubleshooting Symptoms Charts 12-3
Alternator Overcharging with the Engine Running 12-4
Neither Battery is Charging with the Engine Running 12-5
Only One Battery is Charging with the Engine Running 12-7
Voltage Indications Differ 12-8
Coolant Contamination 12-9
Excessive Coolant Loss 12-11
Coolant Temperature Above Normal 12-12
Coolant Temperature Below Normal (Engine Off) 12-16
Coolant Temperature Below Normal (Engine Running) 12-17
Raw Water Drain Steaming 12-18
Raw Water Solenoid Valve Fails to Operate 12-19
Auto Start Failure - Does not Crank on A 12-20
Auto Start Failure - Does not Crank on B 12-21
Auto Start Failure - Does not Crank on A or B 12-22
Auto Start Failure – Cranks but does not Start 12-23
Auto Start Failure – Engine Starts but Crank Terminate does not Occur 12-25
Manual Start Failure from Solenoid Lever - Does not Crank on A 12-27
Manual Start Failure from Solenoid Lever - Does not Crank on B 12-28
Manual Start Failure from Solenoid Lever - Does not Crank on A or B 12-29
Manual Start Failure from Control Panel - Does not Crank on A 12-30
Manual Start Failure from Control Panel - Does not Crank on B 12-31
Manual Start Failure from Control Panel - Does not Crank on A or B 12-32
Engine Cranks Normally But Will Not Start (No Exhaust Smoke) 12-33
Engine Cranks Slowly But Does Not Start 12-37
Engine Difficult to Start or Will Not Start - Exhaust Smoke Present 12-38
Engine Acceleration or Response Poor 12-41
Engine Noise Excessive - Mechanical 12-44
Engine Noise Excessive — Combustion Knocks 12-46
Engine Runs Rough at Idle 12-47

Section Contents (Cont)

Page

Engine Runs Rough or Misfires Under Load 12-49
Engine Speed Surges at Idle 12-51
Engine Speed Surges Under Load 12-53
Engine Vibration Excessive at Rated Speed 12-55
Engine Stops During Operation 12-57
Engine Will Not Reach Rated Speed (RPM) 12-59
Engine Will Not Shut Off Remotely 12-62
Engine Will Not Shut Off Locally 12-63
Excessive Black Exhaust Smoke 12-64
Excessive White Exhaust Smoke 12-67
Fuel Consumption Is Excessive 12-69
Fuel or Lubricating Oil Leaking From Exhaust Manifold 12-71
Lubricating Oil Contaminated 12-72
Fuel in the Lubricating Oil 12-73
Coolant in the Lubricating Oil 12-74
Lubricating Oil Consumption Excessive 12-75
Lubricating Oil in the Coolant 12-77
Lubricating Oil Pressure High 12-78
Lubricating Oil Pressure Low 12-80
Oil Level Rises 12-83
Lubricating Oil Sludge in the Crankcase Excessive 12-84
Turbocharger Leaks Engine Oil or Fuel 12-86
Crankcase Gases (Blowby) - Excessive 12-87
Engine Overspeed Trip 12-88
Tachometer Does Not Indicate Engine Speed 12-89

Troubleshooting Procedures and Techniques

General information

This guide describes some typical engine operating problems, their causes, and some acceptable corrections to those problems.

WARNING

Performing troubleshooting procedures NOT outlined in this in Section can result in equipment damage or personal injury or death.

Troubleshooting must be performed by trained, experienced technicians.

Consult a Cummins Authorized Repair Location for diagnosis and repair beyond that which is contained in this manual, and for symptoms not listed in this in section.

Before beginning any troubleshooting, refer to the General Safety Instructions in Section 1 of this manual.

Follow the suggestions below for troubleshooting:

Study the complaint thoroughly before acting.

Refer to the Engine Identification diagrams in Section 2, the System Diagrams in Section 6, and the Assembly Drawings in Section 13.

Do the easiest and most logical things first.

Find and correct the cause of the complaint.

Troubleshooting Symptoms Charts

WARNING

Troubleshooting presents the risk of equipment damage, personal injury or death Troubleshooting must be performed by trained, experienced technicians.

Use the charts on the following pages of this section to aid in diagnosing specific engine symptoms.

Read each row of blocks from top to bottom.

Follow through the chart to identify the corrective action.

Alternator Overcharging with the Engine Running

NOTE: If the batteries are overcharged while the engine is not running, troubleshoot the customer supplied battery charging system.

Cause	Correction
Batteries have failed.	Check the condition of the batteries. Refer to Battery Testing in Section 7. Replace any defective batteries.
	
The internal voltage regulator in the alternator is malfunctioning.	Test the alternator electrically. Refer to Alternator Checks and Testing in Section 7. If required, replace the alternator. Refer to Alternator Removal/Installation Section 7.
	
Contact an Authorized Cummins Repair Facility.	

Neither Battery is Charging with the Engine Running

NOTE: If one or both batteries do not charge with the engine stopped, troubleshoot the customer supplied battery charging system.

NOTE: If only one battery is maintaining charge, go to Only One Battery is Charging with the Engine Running.

Cause	Correction
Battery cables or connections are loose, broken, or corroded (excessive resistance).	Check the battery cables and connections. Ensure that all connections are free of corrosion and that no cables are broken.
	
Alternator rotor is not turning.	Test the alternator mechanically. Refer to Alternator Checks and Testing in Section 7. If the alternator shaft does not spin freely because of a bad bearing, replace the alternator. Refer to Alternator Removal/Installation in Section 7. If the alternator does not turn because of a bad drive belt, replace the drive belt. Refer to Belt Removal/Installation in Section 7. If the alternator does not charge because of poor drive belt tension, replace the automatic tensioner. Refer to Automatic Belt Tensioner Removal/Installation in Section 7. If the alternator pulley spins freely on the shaft because of a broken key, replace the alternator. Refer to Alternator Removal/Installation in Section 7.
	
Battery Isolator input has faulted.	Test continuity from the alternator to the battery isolator input. Refer to Drawing 10423 Sheet 2 in Section 13. Repair any open circuit. Test continuity through the battery isolator. If an internal open circuit is detected, replace the battery isolator. Refer to Battery Isolator Removal/Installation in Section 7.
	

Neither Battery is Charging with the Engine Running (Cont)

Cause	Correction
Alternator excitation is lost.	Test the alternator electrically. Refer to Alternator Checks and Testing in Section 7. If required, replace the replaceable diode. Refer to Drawing 10423 Sheet 1 in Section 13. If required, locate and repair the open circuit or short to ground in the alternator excitation wiring.
	
Alternator internal voltage regulator is malfunctioning.	Test the alternator electrically. Refer to Alternator Checks and Testing in Section 7. If required, replace the alternator. Refer to Alternator Removal/Installation Section 7.
	
Battery temperature is above specification.	Position the batteries away from heat sources.
	
Contact an Authorized Cummins Repair Facility.	

Only One Battery is Charging with the Engine Running

NOTE: If one or both batteries do not charge with the engine stopped, troubleshoot the customer supplied battery charging system.

NOTE: If neither battery is maintaining charge, go to Neither Battery is Charging with the Engine Running.

Cause	Correction
Battery has failed.	Test battery condition. Refer to Battery Testing in Section 7. If the battery has failed, replace the failed battery units. Refer to Battery Removal/Installation in Section 7.
	
Battery cables or connections are loose, broken, or corroded (excessive resistance).	Check the battery cables and connections. Ensure that all connections are free of corrosion and that no cables are broken.
	
Battery isolator has failed.	Remove the battery isolator. Refer to Battery Isolator Removal/Installation in Section 7. Test the internal diodes for open circuit or short to ground. Refer to the Schematic, Electrical Wiring, 10423 Sheet 2 in Section 13. If required, obtain a replacement battery isolator (Cummins Part No. 8838). Install the battery isolator. Refer to Battery Isolator Removal/Installation in Section 7.
	
Voltmeter is providing false indication.	Go to Voltage Indications Differ in this section.
	
Contact an Authorized Cummins Repair Facility.	

Voltage Indications Differ

NOTE: The two voltmeters may differ slightly due to calibration differences between the meters. Normal differences in battery condition may also cause differences in indication. These are normal differences and require no action. A voltage difference of more than three or four volts should be investigated.

Cause	Correction
One battery is discharged or failing.	Check battery condition. Replace failing battery elements. Check wiring for corrosion. Ensure good electrical contact. Charge discharged batteries by running the engine or with an external battery charger. If the battery does not charge with the engine running, go to Only One Battery is Charging with the Engine Running.
	
Fuse 1 or Fuse 2 is open.	Check for apparent wire damage or shorts to grounds. Refer to Drawing 10423 Sheet 1 in Section 13. Replace the failed fuse. Refer to Drawing 10423 Sheet 1 in Section 13. If the fuse operates again, locate and correct the overload or repair the short circuit.
	
Open circuit or short to ground in indicator wiring.	Locate and repair the electrical fault. Refer to Drawing 10423 Sheet 1 in Section 13.
	
Voltmeter has failed.	Remove wiring at the voltmeter and apply test voltage. If necessary, replace the faulted voltmeter. Refer to Voltmeter Removal/Installation in Section 7.
	
Contact an Authorized Cummins Repair Facility.	

Coolant Contamination

Cause	Correction
Coolant mixture of antifreeze and water is not correct.	Verify the concentration of antifreeze in the coolant. Add antifreeze or water to correct the concentration. Refer to Drain and Flush Cooling System in Section 5.
	
Coolant is rusty and has debris.	Drain and flush the cooling system. Refer to Drain and Flush Cooling System in Section 5. If the drained coolant has excessive rust or debris, change the coolant more frequently or contact a Cummins Authorized Repair Facility. Otherwise, refill with correct mixture of antifreeze and water. Refer to Drain and Flush Cooling System in Section 5.
	
Lubricating oil cooler is leaking oil into the coolant. Coolant begins to have the texture and color of chocolate pudding.	Drain and flush the cooling system. Refer to Drain and Flush Cooling System in Section 5. Refer to the Lubricating Oil Consumption Excessive symptom tree in this section. Refill with correct mixture of antifreeze and water. Refer to Drain and Flush Cooling System in Section 5. If the problem persists, the cylinder block may be cracked or porous. Refer to a Cummins Authorized Repair Facility.
	

Coolant Contamination (Cont)

Coolant Heat Exchanger is leaking raw water into the coolant. Coolant volume increases and pressure is relieved when the unit is operating. Antifreeze concentration decreases.	Drain and flush the cooling system. Refer to Drain and Flush Cooling System in Section 5. Remove Coolant Heat Exchanger. Refer to Coolant Heat Exchanger Removal/Installation in Section 7. Perform a pressure test of the raw water side of the heat exchanger. Refer to Coolant Heat Exchanger Removal/Installation in Section 7. If the heat exchanger leaks, it should be replaced. Install a known good Coolant Heat Exchanger. Refer to Coolant Heat Exchanger Removal/Installation in Section 7. Check and adjust raw water pressure regulator setpoints. Refer to Raw Water Piping, Lineup, and Configuration in Section 3. Check and, if required, replace the Zinc Plug. Refer to Inspect Heat Exchanger Zinc Plug in Section 5. Refill with correct mixture of antifreeze and water. Refer to Drain and Flush Cooling System in Section 5.
	
Coolant is inadvertently contaminated with unknown liquids.	Drain and flush the cooling system. Refill with correct mixture of antifreeze and water. Refer to Drain and Flush Cooling System in Section 5.
	
Contact an Authorized Cummins Repair Facility.	

Excessive Coolant Loss

Cause	Correction
External coolant leak is present.	Inspect the engine for coolant leaking from hoses, drain cocks, water manifold, jumper tubes, expansion and pipe plugs, fittings, lubricating oil cooler, water pump seal, cylinder block, and other components that have coolant flow. Repair leaking components.
	
Pressure cap is malfunctioning or has low-pressure rating.	Check that the pressure cap does not relieve coolant under normal operating conditions. Replace a leaking pressure cap (Cummins Fire Power Part No.11407).
	
Cooling system hose is collapsed, restricted, or leaking.	Inspect the hoses. Refer to Check Hose Condition in Section 7. Replace any damaged hoses. Refer to Coolant Hose Removal/Installation in Section 7.
	
Engine is overheating.	Refer to the Coolant Temperature Above Normal symptom tree.
	
Coolant is leaking into the lubricating oil.	Check for coolant in the oil. Refer to the Coolant in the Lubricating Oil symptom tree in this section.
	
Coolant is leaking into the combustion chamber.	Remove the cylinder head, and inspect cylinder head, gasket, and pistons for evidence of coolant. Refer to Cylinder Head (002-004), Cylinder Head Gasket (002-021), or Piston (001-043) in Troubleshooting and Repair Manual B3.9, B4.5, and B5.9 Series Engines, Bulletin Number 3666087-02.
	
Refer to a Cummins Authorized Repair Facility.	

Coolant Temperature Above Normal

NOTE: The thermostat's normal operating temperature range is 82-95 °C [180-203 °F]. The High Water Temperature lamp on the local control panel (see Instrument Panel in Section 2) illuminates at 93 (92-94) °C [200 (2198-202) °F]. The lamp will only illuminate if the engine is running. If the lamp is illuminated or if temperature is otherwise excessive, the engine should be stopped as soon as practical and the problem corrected.

Cause	Correction
Raw water flow is improperly aligned.	Check that the raw water manifold is aligned for normal flow through the solenoid valve (preferred) or bypass flow around the solenoid valve (alternative). Refer to Drawing 8682 in Section 13. Align flow if required.
	
Raw water pressure regulator is improperly adjusted.	**NOTE**: Pressure should be about 414 kPa [60 psig] or slightly less. Check the raw water pressure indication. If pressure is indicated but is low, adjust the regulator. Refer to Check Raw Water Pressure Regulator Setpoints in Section 3. If pressure is not indicated or is excessively low, go to Raw water solenoid has failed in this table.
	
Raw water solenoid has failed.	If pressure is excessively low when aligned for normal flow, open the bypass valves. Then, when practical, troubleshoot the raw water solenoid valve. Refer to Raw Water Solenoid Valve Fails to Operate in this section. If the solenoid valve operates, replace the pressure regulator. Refer to Raw Water Pressure Regulator Removal/Installation in Section 7. If pressure is excessively low when aligned for bypass flow, open the normal valves. Then, when practical, replace the pressure regulator. Refer to Raw Water Pressure Regulator Removal/Installation in Section 7.
	

Coolant Temperature Above Normal (Cont)

Cause	Correction
Raw water piping or heat exchanger is plugged.	Check the raw water strainer for blockage. Refer to Drawing 8682 in Section 13. Clean the strainer if necessary. Check the Cummins supplied raw water piping for blockage. Refer to Drawing 8682 in Section 13. Clean the piping if necessary. Check the customer supplied raw water piping for blockage. Remove any blockage. Check for flow through the heat exchanger. If necessary, replace the heat exchanger. Refer to Coolant Heat Exchanger Removal/Installation in Section 7.
	
Coolant level is below specification.	Check the coolant level. Refer to Check Coolant Level in Section 5. Add coolant as required. If coolant level was excessively low, go to Excessive Coolant Loss in this section.
	
Cooling system hose is collapsed or restricted.	Inspect the hoses. Refer to Check Hose Condition in Section 5. Replace any damaged hoses. Refer to Coolant Hose Removal/Installation in Section 7.
	
Coolant thermostat is malfunctioning.	Remove and test the coolant thermostat. Refer to Coolant Thermostat Removal/Installation in Section 7. Replace the thermostat if it has failed.
	
Coolant water pump is malfunctioning.	Remove and inspect the water pump. Refer to Coolant Water Pump Removal/Installation in Section 7. Replace the water pump if it has failed.
	

Coolant Temperature Above Normal (Cont)

Cause	Correction
Lubricating oil is contaminated with coolant or fuel.	Check the appearance of the lubricating oil. If the color and texture is abnormal, refer to the Lubricating Oil Contaminated symptom tree.
	
Cooling system hose is collapsed, restricted, or leaking.	Inspect the hoses. Refer to Check Hose Condition in Section 5. Replace any damaged hoses. Refer to Coolant Hose Removal/Installation in Section 7.
	
Coolant mixture of antifreeze and water is not correct.	Verify the concentration of antifreeze in the coolant. Refer to Check Cooling System Condition in Section 5. Add antifreeze or water to correct the concentration. Refer to Coolant Recommendations and Specifications in Section 10.
	
Lubricating oil level is above or below specification.	Check the oil level. Refer to Check Engine Oil Level in Section 5. Add or drain oil, if necessary.
	
Coolant temperature sender is malfunctioning.	Check for an open or short circuit at the temperature sender. If required, replace the temperature sender. Refer to Coolant Temperature Sender Removal/ Installation in Section 7.
	
Coolant temperature gauge is malfunctioning.	Replace the temperature gauge. Refer to Coolant Temperature Gauge Removal/Installation in Section 7.
	

Coolant Temperature Above Normal (Cont)

Cause	Correction
Coolant temperature switch is malfunctioning.	Remove the temperature switch. Refer to Coolant Temperature Switch Removal/Installation in Section 7. Test the temperature switch. It should operate at 93 °C [200 °F]. Repair or replace the switch, if necessary.
	
Refer to a Cummins Authorized Repair Facility.	

Coolant Temperature Below Normal (Engine Off)

Cause	Correction
The 120 VAC power supply to the coolant heater is not connected.	Connect the power supply. Correct any electrical faults in the supply circuit.
	
The heater's overload thermostat has operated.	Ensure that there is coolant in the heater. Allow time for the automatic overload reset to occur.
	
Coolant temperature sender is malfunctioning.	Check for an open or short circuit at the temperature sender. If required, replace the temperature sender. Refer to Coolant Temperature Sender Removal/ Installation in Section 7.
	
Coolant temperature gauge is malfunctioning.	Replace the temperature gauge. Refer to Coolant Temperature Gauge Removal/Installation in Section 7.
	
Coolant is not free to circulate through the heater.	Ensure that the coolant hoses are clear. Refer to Coolant Hose Removal/Installation in Section 7.
	
The coolant heater has failed electrically.	Replace the coolant heater. Refer to Coolant Heater Removal/Installation in Section 7.
	
Contact a Cummins Authorized Repair Facility.	

Coolant Temperature Below Normal (Engine Running)

Cause	Correction
Coolant thermostat has failed open.	Test operation of the thermostat. Refer to Coolant Thermostat Tests in Section 7. If necessary, replace the thermostat. Refer to Coolant Thermostat Removal/Installation in Section 7.
	
Coolant temperature sender is malfunctioning.	Check for an open or short circuit at the temperature sender. If required, replace the temperature sender. Refer to Coolant Temperature Sender Removal/ Installation in Section 7.
	
Coolant temperature gauge is malfunctioning.	Replace the temperature gauge. Refer to Coolant Temperature Gauge Removal/Installation in Section 7.
	
Contact an Authorized Cummins Repair Facility.	

Raw Water Drain Steaming

NOTE: The raw water drain from the Coolant Heat Exchanger may steam if raw water flow is inadequate when the engine is running. It may also steam shortly after the engine is stopped. If coolant is leaking into the raw water drain piping, the steaming may last for some time while the engine cools. Antifreeze may also be observed in the raw water drain.

Cause	Correction
Raw water flow did not start when the engine started.	Check engine coolant temperature. Go to Coolant Temperature Above Normal in this section.
	
Engine coolant is leaking into the raw water piping in the coolant heat exchanger.	When practical, remove the coolant heat exchanger and perform the pressure test. Refer to Coolant Heat Exchanger Removal/Installation in Section 7. If pressure is not maintained, replace the heat exchanger.
	
Contact an Authorized Cummins Repair Facility.	

Raw Water Solenoid Valve Fails to Operate

NOTE: The raw water solenoid failure may fail to open or to close. The normally closed valve may fail to open when the engine starts. This fault will prevent raw water flow through the normal valves. Bypass flow should be aligned in this event. The valve may also fail to close because of mechanical blockage. In this event, the raw water flow from the heat exchanger does not stop when it should. Depending upon the fire protection system piping, the open solenoid valve may drain all water from the fire protection system piping that is higher than the engine's piping.

Cause	Correction
Solenoid valve fails to close when the engine stops.	Replace the solenoid valve. Refer to Raw Water Solenoid Valve Removal/Installation in Section 7. Clean the raw water strainer more frequently. Increase the frequency of operational testing.
	
Solenoid valve fails to energize.	Check electrical continuity and insulation from ground to the solenoid. Repair any open or short circuits in the wiring.
	
Solenoid fails to open mechanically.	**NOTE**: Apply the correct operating voltage, either 12 VDC standard (24 VDC optional) depending upon the model. Apply temporary voltage to the solenoid. If the solenoid fails to operate, replace it. Refer to Raw Water Solenoid Valve Removal/Installation in Section 7.
	
Contact an Authorized Cummins Repair Facility.	

Auto Start Failure - Does not Crank on A

NOTE: The fire pump engine will not crank automatically when solenoid A is selected at the fire protection system. However, it does start automatically when solenoid B is selected.

Cause	Correction
The electrical connection from the fire protection system to Terminal Board TB 9 has failed.	Test continuity and insulation from ground between the fire protection system and the engine control panel. Locate and repair any electrical fault in the field wiring or in the fire protection system panel.
	
The electrical connection from Terminal Board TB 9 to Relay K1 has failed.	Test continuity and insulation from ground between the TB 9 and Relay K1. Locate and repair any electrical fault. Refer to Drawing 10423 Sheet 1 in Section 13.
	
Relay K1 has failed.	Check de-energized continuity at Relay K1 pin 87 to 30. Replace K1 if the circuit is open.
	
Contact an Authorized Cummins Repair Facility.	

Auto Start Failure - Does not Crank on B

NOTE: The fire pump engine will not crank automatically when solenoid B is selected at the fire protection system. However, it does start automatically when solenoid A is selected.

Cause	Correction
The electrical connection from the fire protection system to Terminal Board TB 10 has failed.	Test continuity and insulation from ground between the fire protection system and the engine control panel. Locate and repair any electrical fault in the field wiring or in the fire protection system panel.
	
The electrical connection from Terminal Board TB 10 to Relay K2 has failed.	Test continuity and insulation from ground between the TB 10 and Relay K2. Locate and repair any electrical fault. Refer to Drawing 10423 Sheet 1 in Section 13.
	
Relay K2 has failed.	Check de-energized continuity at Relay K2 pin 87 to 30. Replace K1 if the circuit is open.
	
Contact an Authorized Cummins Repair Facility.	

Auto Start Failure - Does not Crank on A or B

NOTE: The fire pump engine will not crank automatically when either solenoid A or solenoid B is selected at the fire protection system. However, it does crank and start when started locally. If local starting problems are identified, go to the applicable Manual Start Failure troubleshooting table.

Cause	Correction
The Fire Protection System fails to produce either redundant start signal to the fire pump.	Locate and correct the common mode fault in the Fire Protection System.

Auto Start Failure – Cranks but does not Start

NOTE: The fire pump engine will crank automatically when either solenoid A or solenoid B is selected at the fire protection system. However, the engine does not start. The engine will start locally. If local starting problems are identified, go to the applicable Manual Start Failure troubleshooting table.

Cause	Correction
The overspeed switch as actuated. The overspeed lamp is illuminated on the local control panel.	Press the RESET switch on the local control panel.
	
Control power from the Fire Protection System is not available at local control panel TB1.	When practical, locate and correct the fault in the Fire Protection System or the field wiring to the local control panel.
	
Circuit Breaker CB is open in the local control panel.	Check whether Circuit Breaker CB at the local control panel is open. Refer to Drawing 10423 Sheet 1 in Section 13. If open, reset the circuit breaker. Locate and correct any electrical faults in the control panel. Press the RESET switch on the local control panel.
	
The AUTO/MANUAL Rocker Switch fails to select AUTO mode.	When practical, open Circuit Breaker CB at the local control panel and test switch operation electrically. Refer to Drawing 10423 Sheet 1 in Section 13. If required, replace the switch or repair other electrical faults. Refer to Drawing 10423 Sheet 1 in Section 13. When done, close Circuit Breaker CB at the local control panel and “Reset Rocker Switch to AUTO mode.”
	

Auto Start Failure – Cranks but does not Start (Cont)

The overspeed switch has failed.	Check power and grounding to the overspeed switch. Refer to Drawing 10423 Sheet 1 in Section 13. Repair any electrical faults. If required, test and adjust the overspeed setting. Refer to Overspeed Setpoint Adjustment and Testing in Section 3. Replace the overspeed switch. Refer to Overspeed Switch Removal/Installation in Section 7.
	
Contact an Authorized Cummins Repair Facility.	

Auto Start Failure – Engine Starts but Crank Terminate does not Occur

Cause	Correction
The overspeed switch not correctly adjusted or has failed.	When practical, with the engine running, verify speed sensor input to the overspeed switch. Refer to Drawing 10423 Sheet 1 in Section 13. If signal is not present, go to The speed sensor has failed. The tachometer also indicates zero speed in this table. Adjust the overspeed switch crank terminate setpoint. Refer to Crank Terminate Setpoint Adjustment in Section 3. If required, replace the overspeed switch. Refer to Overspeed Switch Removal/Installation in Section 7.
OK	
Fuse 3 has opened. The raw water solenoid valve also fails to open.	Open the raw water bypass valves. When practical, replace Fuse F3. Refer to Drawing 10423 Sheet 1 in Section 13. Locate and repair any local electrical fault. Refer to Drawing 10423 Sheet 1 in Section 13.
OK	
The speed sensor has failed. The tachometer also indicates zero speed.	When practical, locate and repair any electrical fault in the speed sensor circuitry. Refer to Drawing 10423 Sheet 1 in Section 13. If necessary, replace the speed sensor. Refer to Speed Sensor Removal/Installation in Section 7.
OK	
An electrical fault is present in the Fire Protection System.	When practical, test continuity and insulation from ground in the fire protection system and the engine control panel. Locate and repair any electrical fault in the fire protection system panel.
OK	

Auto Start Failure – Engine Starts but Crank Terminate does not Occur (Cont)

An electrical fault is present between Control Panel TB 2 and the Fire Protection System.	When practical, test continuity and insulation from ground between the fire protection system and the engine control panel. Locate and repair any electrical fault in the field wiring.
	
An electrical fault is present in the control panel between Fuse F3 and TB 2.	When practical, test continuity and insulation from ground between Fuse F3 and TB 2. Locate and repair any electrical fault. Refer to Drawing 10423 Sheet 1 in Section 13.
	
Contact an Authorized Cummins Repair Facility.	

Manual Start Failure from Solenoid Lever - Does not Crank on A

NOTE: The fire pump engine will not crank locally from the solenoid lever when solenoid A is actuated. However, it does start when solenoid B is actuated.

Cause	Correction
Battery A is discharged or has failed.	Recharge or replace the battery.
	
An electrical fault is present between Battery A and the starter motor.	When practical, test continuity and insulation from ground between Battery A and the starter motor. Locate and repair any electrical fault. Refer to Drawing 10423 Sheet 1 in Section 13.
	
Solenoid A's switch contact does not close.	Remove and test Solenoid A lever and switch operation. Refer to Crank Solenoid Assembly Removal/Installation in Section 7. If required, replace Solenoid A.
	
Contact an Authorized Cummins Repair Facility.	

Manual Start Failure from Solenoid Lever - Does not Crank on B

NOTE: The fire pump engine will not crank locally from the solenoid lever when solenoid B is actuated. However, it does start when solenoid A is actuated.

Cause	Correction
Battery B is discharged or has failed.	Recharge or replace the battery.
	
An electrical fault is present between Battery B and the starter motor.	When practical, test continuity and insulation from ground between Battery B and the starter motor. Locate and repair any electrical fault. Refer to Drawing 10423 Sheet 1 in Section 13.
	
Solenoid B's switch contact does not close.	Remove and test Solenoid B lever and switch operation. Refer to Crank Solenoid Assembly Removal/Installation in Section 7. If required, replace Solenoid B.
	
Contact an Authorized Cummins Repair Facility.	

Manual Start Failure from Solenoid Lever - Does not Crank on A or B

NOTE: The fire pump engine will not crank locally when either solenoid lever is actuated.

Cause	Correction
Starter motor has failed.	Replace the starter motor. Refer to Starter Motor Removal/Installation in Section 7.
	
An electrical fault is present in the power or ground circuit for the starter motor.	Test continuity and insulation from ground between the battery splice, the ground connection, and the starter motor. Locate and repair any electrical fault. Refer to Drawing 10423 Sheet 1 in Section 13.
	
Engine is seized.	Bar the engine over to break the seizure.
	
Contact an Authorized Cummins Repair Facility.	

Manual Start Failure from Control Panel - Does not Crank on A

NOTE: The fire pump engine will not crank locally from the control panel when CRANK BATT A is selected. However, it does start when CRANK BATT B is selected.

Cause	Correction
The CRANK BATT A switch fails to make contact.	When practical, test the electrical operation of the CRANK BATT A switch. Refer to Drawing 10423 Sheet 1 in Section 13. Replace the switch if faulted.
	
Relay K1 fails in the local manual mode.	When practical, test the electrical operation of the Relay K1. Refer to Drawing 10423 Sheet 1 in Section 13. Replace the relay if faulted.
	
Solenoid A fails to energize due to electrical fault in the power or ground circuit.	Test continuity and insulation from ground between the CRANK BATT A switch, Relay K1, and the starter Solenoid. Also, check the solenoid coil connection to ground. Locate and repair any electrical fault. Refer to Drawing 10423 Sheet 1 in Section 13.
	
Solenoid A fails to operate.	When practical, test the electrical operation of the Solenoid A. Refer to Drawing 10423 Sheet 1 in Section 13. Replace the solenoid if faulted.
	
Contact an Authorized Cummins Repair Facility.	

Manual Start Failure from Control Panel - Does not Crank on B

NOTE: The fire pump engine will not crank locally from the control panel when CRANK BATT B is selected. However, it does start when CRANK BATT A is selected.

Cause	Correction
The CRANK BATT B switch fails to make contact.	When practical, test the electrical operation of the CRANK BATT B switch. Refer to Drawing 10423 Sheet 1 in Section 13. Replace the switch if faulted.
	
Relay K2 fails in the local manual mode.	When practical, test the electrical operation of the Relay K2. Refer to Drawing 10423 Sheet 1 in Section 13. Replace the relay if faulted.
	
Solenoid B fails to energize due to electrical fault in the power or ground circuit.	Test continuity and insulation from ground between the CRANK BATT B switch, Relay K2, and the starter Solenoid. Also, check the solenoid coil connection to ground. Locate and repair any electrical fault. Refer to Drawing 10423 Sheet 1 in Section 13.
	
Solenoid B fails to operate.	When practical, test the electrical operation of the Solenoid B. Refer to Drawing 10423 Sheet 1 in Section 13. Replace the solenoid if it has failed.
	
Contact an Authorized Cummins Repair Facility.	

Manual Start Failure from Control Panel - Does not Crank on A or B

NOTE: The fire pump engine will not crank locally from the control panel when either CRANK BATT A or CRANK BATT B is selected. However, it does start when a solenoid lever is actuated.

Cause	Correction
The MANUAL mode rocker switch contact fails to close.	When practical, test the electrical operation of the AUTO/MANUAL rocker switch. Refer to Drawing 10423 Sheet 1 in Section 13. Replace the solenoid if faulted.
OK	
An electrical fault exists in the signal power circuit or the ground to the Relays K1 and K2.	Test continuity and insulation from ground between the AUTO/MANUAL rocker switch and the relays. Also, check the relay connection to ground. Locate and repair any electrical fault. Refer to Drawing 10423 Sheet 1 in Section 13.
OK	
Fuse F3 has opened. The raw water solenoid valve also fails to open.	Open the raw water bypass valves. When practical, replace Fuse F3. Refer to Drawing 10423 Sheet 1 in Section 13. Locate and repair any local electrical fault. Refer to Drawing 10423 Sheet 1 in Section 13.
OK	
An electrical fault exists in the signal power circuit or the ground to the overspeed switch's crank circuit.	Test continuity and insulation from ground between Fuse F3 and the overspeed switch's crank circuit. Also, check the crank circuit output to the CRANK BATT switches. Locate and repair any electrical fault. Refer to Drawing 10423 Sheet 1 in Section 13.
OK	
Overspeed switch crank circuit fails to reset with engine shutdown.	If required, test and adjust the crank setting. Refer to Overspeed Setpoint Adjustment and Testing in Section 3. If required, replace the overspeed switch. Refer to Overspeed Switch Removal/Installation in Section 7.
OK	
Contact an Authorized Cummins Repair Facility.	

Engine Cranks Normally But Will Not Start (No Exhaust Smoke)

Cause	Correction
No fuel in supply tank.	Check and replenish fuel supply. Check fittings and hose connections and hose conditions.
	
Air is in the fuel system.	Check for air in the fuel system. Tighten or replace the fuel connections, fuel lines, fuel tank standpipe and fuel filters as necessary. Vent air from the system. Refer to Air in Fuel in Section 7.
	
Manual fuel shutoff lever is binding.	Check to be sure manual shutoff lever is not binding at the injection pump.
	
Fuel drain line is restricted.	Check the fuel drain lines for restriction. Clear or replace the fuel lines, check valves, or tank vents as necessary.
	
Fuel filter is clogged.	Replace the fuel filter. Refer to Change Fuel Filter in Section 7.
	
Fuel grade is not correct for the application or the fuel quality is poor.	Operate the engine from a tank of high-quality fuel. Refer to Fuel Recommendations and Specifications in Section 10.
	
Fuel injection pump is malfunctioning.	Perform the fuel injection pump test.
	

Engine Cranks Normally But Will Not Start (No Exhaust Smoke) (Cont)

Fuel injection pump timing is not correct.	Check and adjust the fuel pump timing. Refer to Fuel Adjust Fuel Pump in Section 7.
	
Fuel tank is empty.	Fill the fuel supply tank.
	
Fuel pre-filter is clogged.	Clean the customer-supplied fuel pre-filter.
	
Fuel pump overflow valve is malfunctioning.	Check the overflow valve. Replace if necessary.
	
Fuel Shutoff Valve (FSOV) fails to open.	If the fuel shutoff valve is not functioning, manually override it. Refer to Emergency Starting With Failed Fuel Shut-Off Solenoid in Section 3. When practical, check the wiring for electrical faults. Refer to Drawing 10423 Sheet 2 in Section 13. If the wiring is OK, replace the Fuel Shutoff Valve. Refer to Fuel Shutoff Valve (FSOV) Removal/ Installation in Section 7.
	
Fuel suction line is restricted.	Check the fuel suction line for restriction.
	
Fuel connections on the suction side of the fuel lift pump are loose.	Tighten all the fuel fittings and connections between the fuel tanks and fuel lift pump.
	
Fuel suction standpipe in the fuel tank is broken.	Check and repair the standpipe, if necessary.
	

Engine Cranks Normally But Will Not Start (No Exhaust Smoke) (Cont)

Fuel supply is not adequate.	Check the flow through the filter to locate the source of the restriction.
OK	
Fuel tank air breather hole is clogged.	Clean the fuel tank breather.
OK	
Fuel lift pump is malfunctioning.	Check the fuel lift pump for correct operation. Check the pump output pressure. Replace the fuel lift pump if necessary. Refer to Fuel Lift Pump Removal/ Installation in Section 7.
OK	
Injection pump driveshaft or driveshaft key is damaged.	Repair or replace the injection pump. Refer to Fuel Injection Pump Removal/Installation in Section 7.
OK	
Fuel injectors are plugged.	Replace the fuel injectors. Refer to Fuel Injectors Removal/Installation in Section 7.
OK	
Throttle linkage misadjusted or damaged.	Adjust or repair the linkage.
OK	
Starting motor rotation is not correct.	Check the direction of crankshaft rotation. Replace the starting motor if necessary. Refer to Starter Motor Assembly Removal/Installation in Section 7.
OK	

Engine Cranks Normally But Will Not Start (No Exhaust Smoke) (Cont)

Starting motor is not turning the engine.	Replace the starting motor if necessary. Refer to Starter Motor Assembly Removal/Installation in Section 7.
	
Contact an Authorized Cummins Repair Facility.	

Engine Cranks Slowly But Does Not Start

NOTE: Typical engine cranking speed is 120 RPM. Engine cranking speed can be checked with a hand-held tachometer, stroboscope, or electronic service tool.

Cause	Correction
The batteries are cold.	Ensure that the batteries are protected from extreme temperatures.
	
The battery cables or connections are loose, broken, or corroded creating excessive resistance.	Check the battery cables and connections. Ensure that connections are clean and tight.
	
The battery is not properly charged or has failed.	Recharge the battery. If the battery does not take the charge, replace it.
	
Lubricating oil level is too high.	Check the oil level. Refer to Check Engine Oil Level in Section 7. Drain any excess oil.
	
Lubricating oil is the wrong grade or type.	Check the grade and type of oil. Refer to Lubricating Oil Recommendations and Specifications in Section 10. If the wrong type or grade of oil is present, drain and replace it. Refer to Change Lubricating Oil and Filters in Section 7.
	
Engine temperature is too low.	Troubleshoot as per Coolant Temperature Below Normal (Engine Off) in this section.
	
Starting motor is malfunctioning.	Replace the starting motor. Refer to Starter Motor Assembly Removal/Installation in Section 7.
	
Refer to a Cummins Authorized Repair Facility.	

Engine Difficult to Start or Will Not Start - Exhaust Smoke Present

NOTE: If the engine cranks slowly, refer to Engine Cranks Slowly But Does Not Start in this section.

Cause	Correction
Fuel tank level is low.	Fill the fuel tank. Fill and bleed the fuel lines to the engine.
	
Fuel drain line is restricted.	Check the fuel drain lines for restriction. Clear or replace the fuel lines, check valves, or tank vents as necessary.
	
Fuel filter is clogged.	Replace the fuel filter. Refer to Change Fuel Filter in Section 7.
	
Fuel grade is not correct for the application or the fuel quality is poor.	Operate the engine from a tank of high-quality fuel. Refer to Fuel Recommendations and Specifications in Section 10.
	
Fuel injection pump is malfunctioning.	Perform the fuel injection pump test.
	
Fuel injection pump timing is not correct.	Check and adjust the fuel pump timing. Refer to Fuel Adjust Fuel Pump in Section 7.
	
Fuel pre-filter is clogged.	Clean the customer-supplied fuel pre-filter.
	
Fuel pump overflow valve is malfunctioning.	Check the overflow valve. Replace if necessary.
	

Engine Difficult to Start or Will Not Start - Exhaust Smoke Present (Cont)

Fuel suction line is restricted.	Check the fuel suction line for restriction.
	
Fuel connections on the suction side of the fuel lift pump are loose.	Tighten all the fuel fittings and connections between the fuel tanks and fuel lift pump.
	
Fuel suction standpipe in the fuel tank is broken.	Check and repair the standpipe, if necessary.
	
Fuel tank air breather hole is clogged.	Clean the fuel tank breather.
	
Fuel lift pump is malfunctioning.	Check the fuel lift pump for correct operation. Check the pump output pressure. Replace the fuel lift pump if necessary. Refer to Fuel Lift Pump Removal/ Installation in Section 7.
	
Fuel injectors are plugged.	Replace the fuel injectors. Refer to Fuel Injectors Removal/Installation in Section 7.
	
Throttle linkage misadjusted or damaged.	Adjust or repair the linkage.
	
Intake air flow is restricted.	Check the air intake system for restriction. Refer to Check Air Cleaner Service Indicator in Section 7. Replace the air filter if required.
	

Engine Difficult to Start or Will Not Start - Exhaust Smoke Present (Cont)

Exhaust air flow is restricted.	Check the exhaust air piping for restriction. Remove any restriction.
	
Contact a Cummins Authorized Repair Facility.	

Engine Acceleration or Response Poor

Cause	Correction
Fuel drain line is restricted.	Check the fuel drain lines for restriction. Clear or replace the fuel lines, check valves, or tank vents as necessary.
	
Fuel filter is clogged.	Replace the fuel filter. Refer to Change Fuel Filter in Section 7.
	
Fuel grade is not correct for the application or the fuel quality is poor.	Operate the engine from a tank of high-quality fuel. Refer to Fuel Recommendations and Specifications in Section 10.
	
Fuel injection pump is malfunctioning.	Perform the fuel injection pump test.
	
Fuel injection pump timing is not correct.	Check and adjust the fuel pump timing. Refer to Fuel Adjust Fuel Pump in Section 7.
	
Fuel pre-filter is clogged.	Clean the customer-supplied fuel pre-filter.
	
Fuel pump overflow valve is malfunctioning.	Check the overflow valve. Replace if necessary.
	
Fuel suction line is restricted.	Check the fuel suction line for restriction.
	

Engine Acceleration or Response Poor (Cont)

Fuel connections on the suction side of the fuel lift pump are loose.	Tighten all the fuel fittings and connections between the fuel tanks and fuel lift pump.
	
Fuel suction standpipe in the fuel tank is broken.	Check and repair the standpipe, if necessary.
	
Fuel tank air breather hole is clogged.	Clean the fuel tank breather.
	
Fuel lift pump is malfunctioning.	Check the fuel lift pump for correct operation. Check the pump output pressure. Replace the fuel lift pump if necessary. Refer to Fuel Lift Pump Removal/ Installation in Section 7.
	
Fuel injectors are plugged.	Replace the fuel injectors. Refer to Fuel Injectors Removal/Installation in Section 7.
	
Throttle linkage misadjusted or damaged.	Adjust or repair the linkage.
	
Intake air flow is restricted.	Check the air intake system for restriction. Refer to Check Air Cleaner Service Indicator in Section 7. Replace the air filter if required.
	
Exhaust air flow is restricted.	Check the exhaust air piping for restriction. Remove any restriction.
	

Engine Acceleration or Response Poor (Cont)

Exhaust air is leaking.	Check the exhaust piping for loose or damaged piping connections and missing pipe plugs. Check the turbocharger and exhaust manifold mounting. If required, replace the turbocharger. Refer to Turbocharger Removal/Installation in Section 7.
	
The aftercooler is restricted or leaking.	Inspect the aftercooler for air restrictions or leaks. If required, replace the aftercooler. Refer to Aftercooler Removal/Installation in Section 7.
	
Refer to a Cummins Authorized Repair Facility.	

Engine Noise Excessive - Mechanical

Cause	Correction
Lubricating oil is thin or diluted.	Check the oil level. Refer to Check Lubricating Oil Level in Section 7. If the oil level is above the high mark, go to Oil Level Rises in this section. Otherwise, ensure that the correct type and grade of lubricating oil is being used. Refer to the Lubricating Oil Recommendations and Specifications in Section 10.
OK	
Lubricating oil pressure is below specification.	**NOTE**: Oil pressure should range between 69 and 345 kPa [10 to 50 PSI] with the engine running. Check the oil pressure on the local control panel. If the pressure is low, refer to the Lubricating Oil Pressure Low symptom tree in this section.
OK	
Vibration damper is damaged.	Inspect the vibration damper. Refer to Inspect Vibration Damper in Section 5. If the vibration damper is damaged, refer to a Cummins Authorized Repair Facility.
OK	
Engine mounts are worn or damaged.	Inspect the engine mounts. If the engine mounts are worn or damaged, refer to a Cummins Authorized Repair Facility.
OK	
Coolant temperature is above specification.	Check the coolant temperature indication on the local control panel. If the high coolant temperature light is illuminated, refer to the Coolant Temperature Above Normal symptom tree in this section.
OK	

Engine Noise Excessive – Mechanical (Cont)

Drive belt is squeaking due to insufficient tension or high loading.	Check the automatic belt tensioner. If required, replace the tensioner. Refer to Automatic Belt Tensioner Removal/Installation in Section 7.
	
Intake air flow is restricted.	Check the air intake system for restriction. Refer to Check Air Cleaner Service Indicator in Section 7. Replace the air filter if required.
	
Exhaust air flow is restricted.	Check the exhaust air piping for restriction. Remove any restriction.
	
Air leakage between the turbocharger and head.	Tighten the clamp between turbocharger and head. Repair leaks between turbocharger and head.
	
Turbocharger does not rotate freely.	Replace the turbocharger. Refer to Turbocharger Removal/Installation in Section 7.
	
Contact a Cummins Authorized Repair Facility.	

Engine Noise Excessive — Combustion Knocks

Cause	Correction
Engine is overloaded.	Check for added mechanical loading from damaged or defective pump, changes in suction head, or changes in discharge piping restriction.
	
Fuel grade is not correct for the application or the fuel quality is poor.	Operate the engine using the correct fuel. Refer to Fuel Recommendations and Specifications in Section 10.
	
Air in present in the fuel supply to the engine.	Check for air in the fuel system. Tighten or replace the fuel connections, fuel lines, fuel tank standpipe and fuel filters as necessary. Vent air from the system. Refer to Air in Fuel in Section 7.
	
The fuel injection pump's timing is not correct.	Check and adjust the fuel injection pump timing. Refer to Adjust Fuel Pump in Section 7.
	
The fuel injection pump is failing.	Replace the fuel injection pump. Refer to Fuel Injection Pump Removal/Installation in Section 7.
	
Coolant temperature is below specification.	Refer to the Coolant Temperature Below Normal (Engine Running) symptom tree in this section.
	
Refer to a Cummins Authorized Repair Facility.	

Engine Runs Rough at Idle

NOTE: Operation at idle speed is for maintenance only.

Cause	Correction
Engine is cold.	Allow the engine to warm to operating temperature. If the engine will not reach operating temperature, refer to the Coolant Temperature Below Normal (Engine Running) symptom tree.
	
Idle speed is set too low.	Adjust the idle speed.
	
Air is present in the fuel system.	Check for air in the fuel system. Tighten or replace the fuel connections, fuel lines, fuel tank standpipe and fuel filters as necessary. Vent air from the system. Refer to Air in Fuel in Section 7.
	
Fuel filter is becoming plugged.	Replace the fuel filter. Refer to Change Fuel Filter in Section 7.
	
Fuel supply to the engine is inadequate.	Locate and correct the restriction in fuel flow to the engine.
	
The fuel lift pump is malfunctioning.	Check the fuel lift pump for correct operation. Check the pump output pressure. Replace the fuel lift pump if necessary. Refer to Fuel Lift Pump Removal/ Installation in Section 7.
	
Engine mounts are worn or damaged.	Check the engine mounts. If damaged, refer to a Cummins Authorized Repair Facility.
	

Engine Runs Rough at Idle (Cont)

Fuel grade is not correct for the application or the fuel quality is poor.	Operate the engine on the required fuel. Refer to Fuel Recommendations and Specifications in Section 10.
	
Fuel pump overflow valve is malfunctioning.	Check the overflow valve. Replace if necessary. Refer to Fuel Return Overflow Valve Removal and Installation in Section 7.
	
Fuel injection pump timing is incorrect.	Check and adjust the injection pump timing. Refer to Adjust Fuel Pump in Section 7.
	
Injector is malfunctioning.	Inspect the injectors. Replace the injectors as necessary. Refer to Fuel Injectors Removal/Installation in Section 7.
	
Fuel injection pump is malfunctioning.	Remove the fuel injection pump. Refer to Fuel Injection Pump Removal/Installation in Section 7. Check the calibration of the fuel injection pump. Replace the pump if necessary.
	
Contact a Cummins Authorized Repair Facility.	

Engine Runs Rough or Misfires Under Load

Cause	Correction
Engine is cold.	Allow the engine to warm to operating temperature. If the engine will not reach operating temperature, refer to the Coolant Temperature Below Normal (Engine Running) symptom tree.
	
Air is present in the fuel system.	Check for air in the fuel system. Tighten or replace the fuel connections, fuel lines, fuel tank standpipe and fuel filters as necessary. Vent air from the system. Refer to Air in Fuel in Section 7.
	
Fuel filter is becoming plugged.	Replace the fuel filter. Refer to Change Fuel Filter in Section 7.
	
Fuel supply to the engine is inadequate.	Locate and correct the restriction in fuel flow to the engine.
	
The fuel lift pump is malfunctioning.	Check the fuel lift pump for correct operation. Check the pump output pressure. Replace the fuel lift pump if necessary. Refer to Fuel Lift Pump Removal/ Installation in Section 7.
	
Engine mounts are worn or damaged.	Check the engine mounts. If damaged, refer to a Cummins Authorized Repair Facility.
	
Fuel grade is not correct for the application or the fuel quality is poor.	Operate the engine on the required fuel. Refer to Fuel Recommendations and Specifications in Section 10.
	

Engine Runs Rough or Misfires Under Load (Cont)

Fuel pump overflow valve is malfunctioning.	Check the overflow valve. Replace if necessary. Refer to Fuel Return Overflow Valve Removal and Installation in Section 7.
	
Fuel injection pump timing is incorrect.	Check and adjust the injection pump timing. Refer to Adjust Fuel Pump in Section 7.
	
Injector is malfunctioning.	Inspect the injectors. Replace the injectors as necessary. Refer to Fuel Injectors Removal/Installation in Section 7.
	
Fuel injection pump is malfunctioning.	Remove the fuel injection pump. Refer to Fuel Injection Pump Removal/Installation in Section 7. Check the calibration of the fuel injection pump. Replace the pump if necessary.
	
Contact a Cummins Authorized Repair Facility.	

Engine Speed Surges at Idle

NOTE: Operation at idle speed is for maintenance only.

Cause	Correction
Fuel level is low in the tank.	Fill the fuel tank. Fill and bleed the fuel lines to the engine.
	
Engine idle speed is set too low.	Adjust the idle speed.
	
Air is in the fuel supply to the engine.	Check for air in the fuel system. Tighten or replace the fuel connections, fuel lines, fuel tank standpipe and fuel filters as necessary. Vent air from the system. Refer to Air in Fuel in Section 7.
	
The fuel filter is plugged.	Replace the fuel filter. Refer to Change Fuel Filter in Section 7.
	
Fuel flow to the engine is not adequate.	Locate and correct the restriction in the customer-supplied fuel lines to the engine.
	
The fuel lift pump is malfunctioning.	Check the fuel lift pump for correct operation. Check the pump output pressure. Replace the fuel lift pump if necessary. Refer to Fuel Lift Pump Removal/ Installation in Section 7.
	
Fuel grade is not correct for the application or the fuel quality is poor.	Operate the engine with the required fuel. Refer to Fuel Recommendations and Specifications in Section 10.
	

Engine Speed Surges at Idle (Cont)

The fuel injection pump is malfunctioning.	Remove the fuel pump. Refer to Fuel Injection Pump Removal/Installation in Section 7. Calibrate the fuel pump. If required, replace the fuel injection pump.
	
A fuel supply line restriction exists between the fuel injection pump and the injectors.	Check the fuel supply line or passage for sharp bends or restriction. Remove any restrictions.
	
A fuel injector is malfunctioning.	Replace the malfunctioning injector. Refer to Fuel Injectors Removal/Installation in Section 7.
	
Moisture is present in the wiring harness connectors.	Dry the connectors with Cummins electronic cleaner, Part Number 3824510.
	
Contact a Cummins Authorized Repair Facility.	

Engine Speed Surges Under Load

Cause	Correction
Pump suction head or pump discharge head changes.	Some variation in speed response to load changes is normal. Excessive speed changes may occur upon sudden failures in either suction or discharge piping systems.
	
Fuel level is low in the tank.	Fill the fuel tank. Fill and bleed the fuel lines to the engine.
	
Air is in the fuel supply to the engine.	Check for air in the fuel system. Tighten or replace the fuel connections, fuel lines, fuel tank standpipe and fuel filters as necessary. Vent air from the system. Refer to Air in Fuel in Section 7.
	
The fuel filter is plugged.	Replace the fuel filter. Refer to Change Fuel Filter in Section 7.
	
Fuel flow to the engine is not adequate.	Locate and correct the restriction in the customer-supplied fuel lines to the engine.
	
The fuel lift pump is malfunctioning.	Check the fuel lift pump for correct operation. Check the pump output pressure. Replace the fuel lift pump if necessary. Refer to Fuel Lift Pump Removal/ Installation in Section 7.
	
Fuel grade is not correct for the application or the fuel quality is poor.	Operate the engine with the required fuel. Refer to Fuel Recommendations and Specifications in Section 10.
	

Engine Speed Surges Under Load (Cont)

The fuel injection pump is malfunctioning.	Remove the fuel pump. Refer to Fuel Injection Pump Removal/Installation in Section 7. Calibrate the fuel pump. If required, replace the fuel injection pump.
	
A fuel supply line restriction exists between the fuel injection pump and the injectors.	Check the fuel supply line or passage for sharp bends or restriction. Remove any restrictions.
	
A fuel injector is malfunctioning.	Replace the malfunctioning injector. Refer to Fuel Injectors Removal/Installation in Section 7.
	
Moisture is present in the wiring harness connectors.	Dry the connectors with Cummins electronic cleaner, Part Number 3824510.
	
Contact a Cummins Authorized Repair Facility.	

Engine Vibration Excessive at Rated Speed

Cause	Correction
Engine runs rough or is misfiring.	Refer to the Engine Runs Rough or Misfires Under Load symptom tree in this section.
OK	
Fuel injection pump is adjusted incorrectly.	Adjust or replace the injection pump. Refer to Adjust Fuel Pump and/or Fuel Injection Pump Removal/ Installation in Section 7.
OK	
Engine mounts are worn or damaged.	Inspect the engine mounts. Refer to Check Engine Mounting Bolts in Section 5. Replace the engine mounts as needed. Refer to a Cummins Authorized Repair Facility.
OK	
Vibration damper is malfunctioning.	Inspect the vibration damper. Refer to Inspect Vibration Damper in Section 5. Replace, if necessary. Refer to a Cummins Authorized Repair Facility.
OK	
Alternator bearing is worn or damaged.	Check if the alternator is vibrating excessively. Replace the alternator if necessary. Refer to Alternator Removal/Installation in Section 7.
OK	
Water pump bearing is worn or damaged.	Check if the water pump is vibrating excessively. Replace the pump if necessary. Refer to Water Pump Removal/Installation in Section 7.
OK	

Engine Vibration Excessive at Rated Speed (Cont)

Automatic belt tensioner bearing is worn or damaged.	Check if the belt tensioner is vibrating excessively. Replace the tensioner if necessary. Refer to Automatic Belt Tensioner Removal/Installation in Section 7.
	
Contact a Cummins Authorized Repair Facility.	

Engine Stops During Operation

Cause	Correction
Normal automatic mode shutdown occurs when the fire protection systems removes the signal power feed to the local control panel.	No action required. This is a desirable outcome.
	
In the automatic mode, the signal power feed is lost from the fire protection system to the control panel.	Locate and correct the electrical fault in the fire protection system or the field wiring to the engine control panel.
	
Signal power is lost by the operation of the circuit breaker the engine control panel.	Press the circuit breaker reset button on the engine control panel. Locate and correct the electrical fault in engine control panel. Refer to Drawing 10423 Sheet 1 in Section 13.
	
An overspeed trip has occurred. The overspeed trip light is illuminated on the local control panel. Remote indications may also be present. Alternatively, a related overspeed switch failure has occurred. The trip indications may not be present.	Go to Engine Overspeed Trip in this section.
	
The selected engine control module (ECM) has detected a serious fault condition. The ECM's STOP light is displayed.	
	
The fuel shutoff valve (FSOV) has failed.	Check the wiring continuity and insulation from ground for the Fuel Shutoff Switch. Refer to Drawing 10423 Sheet 1 and Drawing 10423 Sheet 2 in Section 13. Correct any electrical faults. If required, replace the FSOV. Refer to Fuel Shutoff Valve (FSOV) Removal/Installation in Section 7.
	

Engine Stops During Operation (Cont)

Fuel tank level is low.	Fill the fuel tank. Fill and bleed the fuel lines to the engine.
	
Clogged fuel tank air breather hole.	Clean the fuel tank breather.
	
Customer-supplied fuel pre-filter is clogged.	Clean the fuel pre-filter. Fill and bleed the fuel lines to the engine.
	
Fuel piping to engine is clogged.	Clean and repair the fuel piping to the engine.
	
The fuel filter is clogged.	Replace the fuel filter. Refer to Change Fuel Filter in Section 7.
	
Air is trapped in the low pressure fuel lines at the engine.	Bleed the fuel lines. Refer to Air in Fuel in Section 7.
	
Fuel lift pump has failed.	Check the fuel lift pump for correct operation. Check the pump output pressure. Replace the fuel lift pump if necessary. Refer to Fuel Lift Pump Removal/ Installation in Section 7.
	
Fuel injection pump has failed.	Replace the fuel injection pump. Refer to Fuel Injection Pump Removal/Installation in Section 7.
	
Contact an Authorized Cummins Repair Facility.	

Engine Will Not Reach Rated Speed (RPM)

Cause	Correction
Load is excessive for engine horsepower rating.	Reduce the engine load.
	
Throttle adjustment is not correct.	Check the throttle adjustment. Refer to instructions in Section 3.
	
Fuel shutoff lever (mechanical) partially engaged.	Make sure fuel shutoff lever is in the RUN position. Refer to instructions in Section 3. Replace if necessary. Refer to instructions in Section 7.
	
Tachometer is not calibrated.	Compare the tachometer reading with a handheld tachometer or an electronic service tool reading. If out of calibration, calibrate the tachometer as necessary at the CAL adjustment on the back of the gauge. Refer to Tachometer Calibration in Section 7.
Tachometer is malfunctioning.	Replace the tachometer. Refer to Tachometer Removal/Installation in Section 7.
	
Engine power output is low.	Refer to the Engine Acceleration or Response Poor symptom tree in this section.
	
Fuel grade is not correct for the application, or the fuel quality is poor.	Operate the engine with the required fuel. Refer to Fuel Recommendations and Specifications in Section 10.
	
Fuel filter is clogged.	Replace the fuel filter. Refer to Change Fuel Filter in Section 7.
	

Engine Will Not Reach Rated Speed (RPM) (Cont)

Fuel suction line is restricted.	Check the fuel suction line for restriction.
	
Air-fuel tube leaking, wastegate diaphragm ruptured, or wastegate plumbing damaged.	Tighten the fittings, repair plumbing, replace wastegate diaphragm.
	
Charge air cooler restricted (if equipped).	Inspect the air cooler for internal and external restrictions. Replace the restricted cooler if necessary.
	
Fuel supply is not adequate.	Locate and correct the restriction in the customer-supplied fuel lines to the engine.
	
Exhaust back pressure too high.	**NOTE**: The maximum allowable exhaust back pressure is specified in Exhaust System Specifications in Section 10. Measure the exhaust back pressure. Correct the problem is it is above specification.
	
Fuel lift pump is malfunctioning.	Check the fuel lift pump for correct operation. Check the pump output pressure. Replace the fuel lift pump if necessary. Refer to Fuel Lift Pump Removal/ Installation in Section 7.
	

Engine Will Not Reach Rated Speed (RPM) (Cont)

Fuel injection pump is malfunctioning.	Remove the fuel pump. Refer to Fuel Injection Pump Removal/Installation in Section 7. Calibrate the fuel pump. If required, replace the fuel injection pump.
	
Contact an Authorized Cummins Repair Facility.	

Engine Will Not Shut Off Remotely

Cause	Correction
Stop circuit malfunction in the fire pump controller of field wiring.	**NOTE**: In the AUTO mode, the fire pump engine stops upon loss of signal power from the fire pump controller. Check the engine stop circuit in the fire pump controller. Correct any faults. Check for short to voltage on the signal wiring from the fire pump controller to the engine control panel. Correct any faults. Check operation of the switch contacts of the AUTO/MANUAL switch at the engine control panel. Replace the switch if the switch contacts fail to operate properly.
	
Fuel Shutoff Valve (FSOV) fails to close.	Press the RESET switch on the engine control panel. Alternatively, operate the manual override. **NOTE**: If the RESET switch did not close the valve, an electrical fault to voltage may be present. Refer to Drawing 10423 Sheet 1 and Drawing 10423 Sheet 2 in Section 13. If required, replace the fuel shutoff valve. Refer to Fuel Shutoff Valve (FSOV) Removal/Installation in Section 7.
	
Engine running on fumes drawn into the air intake.	Identify and isolate the source of the combustible fumes.
	
Contact an Authorized Cummins Repair Facility.	

Engine Will Not Shut Off Locally

Cause	Correction
Fuel Shutoff Valve (FSOV) fails to close.	Press the RESET switch on the engine control panel. Alternatively, operate the manual override. **NOTE**: If the RESET switch did not close the valve, an electrical fault to voltage may be present. Refer to Drawing 10423 Sheet 1 and Drawing 10423 Sheet 2 in Section 13. If required, replace the fuel shutoff valve. Refer to Fuel Shutoff Valve (FSOV) Removal/Installation in Section 7.
OK	
Engine is running on fumes drawn into the air intake.	Identify and isolate the source of the combustible fumes.
OK	
Refer to a Cummins Authorized Repair Facility.	

Excessive Black Exhaust Smoke

Cause	Correction
Engine is being lugged down.	Increase pump suction head or decrease pump discharge head.
	
Air filter is plugged.	Check the air intake system for restriction. Refer to Check Air Cleaner Service Indicator in Section 5. Replace the air filter if required.
	
Aftercooler air flow is restricted.	Inspect for plugged passages in the aftercooler. Refer to Aftercooler (010-001) in Troubleshooting and Repair Manual B3.9, B4.5, and B5.9 Series Engines, Bulletin Number 3666087-02.
	
Exhaust system flow is restricted.	Check the exhaust system for any restrictions. Refer to Exhaust Restriction (011-009) in Troubleshooting and Repair Manual B3.9, B4.5, and B5.9 Series Engines, Bulletin Number 3666087-02.
	
Air leak exists between the turbocharger and the intake manifold.	Check for leaks in the air crossover tube, charge air cooler connections, hoses, or through holes in the manifold cover and repair or replace if necessary. Refer to Air Leaks, Air Intake and Exhaust Systems (010-024) in Troubleshooting and Repair Manual B3.9, B4.5, and B5.9 Series Engines, Bulletin Number 3666087-02.
	
Exhaust leaks are present at the exhaust manifold or the turbocharger.	Check and correct any leaks in the exhaust manifold or turbocharger gaskets. Check for a cracked exhaust manifold. Refer to Exhaust Manifold, Dry (011-007) in Troubleshooting and Repair Manual B3.9, B4.5, and B5.9 Series Engines, Bulletin Number 3666087-02.
	

Excessive Black Exhaust Smoke (Cont)

Closed crankcase ventilation hoses are leaking or damaged.	Inspect the closed crankcase ventilation system hoses and connections for leaks, obstruction, or damage. Refer to Closed Crankcase Ventilation Hoses (003-024) in Troubleshooting and Repair Manual B3.9, B4.5, and B5.9 Series Engines, Bulletin Number 3666087-02.
	
Close crankcase ventilation valve is leaking or malfunctioning.	Inspect the closed crankcase ventilation valve for obstruction or damage. Refer to Closed Crankcase Ventilation Valve (003-023) in Troubleshooting and Repair Manual B3.9, B4.5, and B5.9 Series Engines, Bulletin Number 3666087-02.
	
Turbocharger wastegate is malfunctioning (CFP59-F10, F15, F20, F25, F40, F45, F50 ONLY).	Check the wastegate for correct operation. Refer to Turbocharger Wastegate Actuator (010-050) in Troubleshooting and Repair Manual B3.9, B4.5, and B5.9 Series Engines, Bulletin Number 3666087-02.
	
Turbocharger is worn or malfunctioning.	Check for the specified boost pressure. Inspect the turbocharger. Replace if necessary. Refer to Turbocharger (010-033) in Troubleshooting and Repair Manual B3.9, B4.5, and B5.9 Series Engines, Bulletin Number 3666087-02.
	
Injectors are worn or malfunctioning.	Remove and test the injectors. Replace as necessary. Refer to Injector (006-026) in Troubleshooting and Repair Manual B3.9, B4.5, and B5.9 Series Engines, Bulletin Number 3666087-02.
	

Excessive Black Exhaust Smoke (Cont)

Injector sealing washer is not correct.	Remove the injector. Check for extra sealing washer is installed under the injector. Check for proper sealing washer, and remove any additional sealing washer(s). Only one is required. Refer to Injector (006-026) in Troubleshooting and Repair Manual B3.9, B4.5, and B5.9 Series Engines, Bulletin Number 3666087-02.
	
Fuel injection pump timing is not correct.	Put the engine at top dead center. Check and adjust the fuel timing. Refer to Fuel Pump Timing (005-037). in Troubleshooting and Repair Manual B3.9, B4.5, and B5.9 Series Engines, Bulletin Number 3666087-02.
	
Fuel injection pump is malfunctioning.	Remove the fuel injection pump. Check the calibration of the fuel injection pump. Refer to Fuel Injection Pumps, In-Line (005-012) or Fuel Injection Pump, Rotary (005-014) in Troubleshooting and Repair Manual B3.9, B4.5, and B5.9 Series Engines, Bulletin Number 3666087-02.
	
Piston rings are not sealing (blue smoke).	Perform a compression check and correct as required. Refer to Engine Testing (Engine Dynamometer) (014-005) in Troubleshooting and Repair Manual B3.9, B4.5, and B5.9 Series Engines, Bulletin Number 3666087-02.
	
Contact an Authorized Cummins Repair Facility.	

Excessive White Exhaust Smoke

Cause	Correction
Coolant temperature is below specification or the intake manifold air temperature is below specification.	Refer to the Coolant Temperature Below Normal (Engine Running) symptom tree in this section.
	
Poor fuel quality or wrong fuel grade.	Operate the engine from a tank of high-quality fuel. Refer to Fuel Recommendations and Specifications in Section 10.
	
Fuel injection pump timing is not correct.	Put the engine at top dead center. Check and adjust the fuel timing. Refer to Fuel Pump Timing (005-037) in Troubleshooting and Repair Manual B3.9, B4.5, and B5.9 Series Engines, Bulletin Number 3666087-02.
	
Injector sealing washer is not correct.	Check to see if an extra sealing washer is installed under injector. Remove any additional sealing washer. Only one is required. Refer to Injector (006-026) in Troubleshooting and Repair Manual B3.9, B4.5, and B5.9 Series Engines, Bulletin Number 3666087-02.
	
Injectors are worn or malfunctioning.	Remove and test the injectors. Replace as necessary. Refer to Injector (006-026) in Troubleshooting and Repair Manual B3.9, B4.5, and B5.9 Series Engines, Bulletin Number 3666087-02.
	
Coolant is leaking into the combustion chamber.	Refer to the Excessive Coolant Loss symptom tree in this section.
	

Excessive White Exhaust Smoke (Cont)

Fuel injection pump is malfunctioning.	Remove the fuel injection pump. Check the calibration of the fuel injection pump. Refer to Fuel Injection Pumps, In-Line (005-012) or Fuel Injection Pump, Rotary (005-014) in Troubleshooting and Repair Manual B3.9, B4.5, and B5.9 Series Engines, Bulletin Number 3666087-02.
	
Contact an Authorized Cummins Repair Facility.	

Fuel Consumption Is Excessive

Cause	Correction
Fuel is leaking.	Check the fuel lines, fuel connections, and fuel filters for leaks. Check the fuel lines to the supply tanks. Repair any leaks.
OK	
Poor-quality fuel is being used.	Assure good-quality No. 2 diesel fuel is being used. Refer to Fuel Recommendations and Specifications in Section 10.
OK	
Intake or exhaust restriction.	Refer to troubleshooting logic for Exhaust Smoke Excessive Under Load in this section.
OK	
Defective or clogged injection nozzle.	Replace the defective or clogged injection nozzle.
OK	
Incorrect injection timing.	Adjust injection timing.
OK	
Injection pump is adjusted incorrectly causing excessive injection.	Adjust or replace the injection pump.
OK	
Hour meter is not calibrated.	Check the hour meter. Calibrate or replace the hour meter if necessary.
OK	

Fuel Consumption Is Excessive (Cont)

Air intake or exhaust leaks.	Check for loose or damaged piping connections and missing pipe plugs. Check the turbocharger and exhaust manifold mounting. Repair any leaks.
	
Air intake system restriction is above specification.	Check the air intake system for restriction. Refer to Check Air Cleaner Service Indicator in Section 7. Replace the air filter as necessary.
	
Lubricating oil level above specification.	Check the oil level. Refer to Check Engine Oil Level in Section 5. Drain excess oil and correct the deficiency in maintenance processes.
	
Contact an Authorized Cummins Repair Facility.	

Fuel or Lubricating Oil Leaking From Exhaust Manifold

Cause	Correction
Intake air restriction is high.	Check the air intake system for restriction. Refer to Check Air Cleaner Service Indicator in Section 7. Replace the air filter if required.
	
Turbocharger drain line is restricted.	Remove the turbocharger drain line and check for restriction. If required, clean or replace the drain line.
	
Turbocharger oil seal is leaking.	Check the turbocharger for oil seals and for leaks. Refer to the Turbocharger Leaks Engine Oil or Fuel symptom tree in this section.
	
Contact an Authorized Cummins Repair Facility.	

Lubricating Oil Contaminated

NOTE: If excessive sludge is present in the oilpan, refer to Lubricating Oil Sludge in the Crankcase Excessive in this section.

Cause	Correction
Bulk oil supply is contaminated.	Check the bulk oil supply. Replace it is necessary. Refer to Lubricating Oil Recommendations and Specifications in Section 10. Drain the oil and replace with non-contaminated oil. Also, replace the oil filter. Refer to Change Lubricating Oil and Filters in Section 7.
	
Fuel is present in the lubricating oil.	Refer to the Fuel in Lubricating Oil symptom tree.
	
Coolant is present in the lubricating oil.	Refer to the Coolant in Lubricating Oil symptom tree in this section.
	
Metal is present in the lubricating oil.	Contact an Authorized Cummins Repair Facility.
	
Identify unknown lubricating oil contamination.	Analyze the oil and inspect the filters to identify the contamination.
	
Contact an Authorized Cummins Repair Facility.	

Fuel in the Lubricating Oil

Cause	Correction
Fuel transfer pump malfunctioning.	Check or replace the fuel transfer pump. Refer to Fuel Lift Pump (005-045) in Troubleshooting and Repair Manual B3.9, B4.5, and B5.9 Series Engines, Bulletin Number 3666087-02.
	
Fuel injection pump seal leaking (rotary).	Remove the fuel injection pump and repair if necessary. Refer to Fuel Injection Pump, Rotary (005-014) in Troubleshooting and Repair Manual B3.9, B4.5, and B5.9 Series Engines, Bulletin Number 3666087-02.
	
Internal plunger seal leaking (inline).	Remove the fuel injection pump and repair if necessary. Refer to Fuel Injection Pumps, In-Line (005-012) in Troubleshooting and Repair Manual B3.9, B4.5, and B5.9 Series Engines, Bulletin Number 3666087-02.
	
Injector needle valve sticking.	Check or replace the injector. Refer to Injector (006-026) in Troubleshooting and Repair Manual B3.9, B4.5, and B5.9 Series Engines, Bulletin Number 3666087-02.
	
Contact an Authorized Cummins Repair Facility.	

Coolant in the Lubricating Oil

Cause	Correction
Lubricating oil cooler is leaking.	Check the lubricating oil cooler for coolant leaks and cracks. Refer to Lubricating Oil Cooler (007-003) in Troubleshooting and Repair Manual B3.9, B4.5, and B5.9 Series Engines, Bulletin Number 3666087-02.
	
Aftercooler is leaking.	Inspect and pressure-test the aftercooler for leaks. Refer to Aftercooler (010-001) in Troubleshooting and Repair Manual B3.9, B4.5, and B5.9 Series Engines, Bulletin Number 3666087-02.
	
Cylinder head gasket is leaking.	Check the cylinder head gasket. Refer to Cylinder Head Gasket (002-021) in Troubleshooting and Repair Manual B3.9, B4.5, and B5.9 Series Engines, Bulletin Number 3666087-02.
	
Cylinder head is cracked or porous.	Remove intake and exhaust manifolds. Check for evidence of coolant leak. If necessary, operate engine at low idle. Pressure-test the cylinder head. Refer to Cylinder Head (002-004) in Troubleshooting and Repair Manual B3.9, B4.5, and B5.9 Series Engines, Bulletin Number 3666087-02.
	
Cylinder head core and expansion plugs leaking or misassembled.	Check cylinder head. Refer to Cylinder Head (002-004) in Troubleshooting and Repair Manual B3.9, B4.5, and B5.9 Series Engines, Bulletin Number 3666087-02.
	
Cylinder block is cracked or porous.	Inspect the cylinder block. Refer to Cylinder Block (001-026) in Troubleshooting and Repair Manual B3.9, B4.5, and B5.9 Series Engines, Bulletin Number 3666087-02.
Contact an Authorized Cummins Repair Facility.	

Lubricating Oil Consumption Excessive

Cause	Correction
Lubricating oil does not meet specifications for operating conditions.	Change the oil and filters. Refer to Change Lubricating Oil and Filters in Section 7. Use the oil type recommended in Lubricating Oil Recommendations and Specifications in Section 10.
OK	
External engine leak is present.	Inspect the engine and its components for seal, gasket, tappet cover, oil cooler, or draincocks leaks. Repair or correct any leaks.
OK	
Lubricating oil cooler is leaking.	Check the lubricating oil cooler for coolant leaks. Refer to Lubricating Oil in the Coolant in this section.
OK	
Blowby excessive.	Check for excessive blow by.
OK	
Turbocharger is leaking lubricating oil to the air intake or exhaust.	Inspect the air crossover tube for evidence of lubricating oil transfer. Refer to Air Crossover (010-019) in Troubleshooting and Repair Manual B3.9, B4.5, and B5.9 Series Engines, Bulletin Number 3666087-02.
OK	
Lubricating oil drain interval is excessive.	Verify the correct lubricating oil drain interval. Refer to Change Lubricating Oil and Filters in Section 7.
OK	
Verify the oil consumption rate.	Check the amount of oil added versus the hours of operation.
OK	

Lubricating Oil Consumption Excessive (Cont)

Closed crankcase ventilation hoses are leaking or damaged.	Inspect the closed crankcase ventilation system hoses and connections for leaks, obstruction, or damage. Refer to Closed Crankcase Ventilation Hoses (003-024) in Troubleshooting and Repair Manual B3.9, B4.5, and B5.9 Series Engines, Bulletin Number 3666087-02.
	
Close crankcase ventilation valve is leaking or malfunctioning.	Inspect the closed crankcase ventilation valve for obstruction or damage. Refer to Closed Crankcase Ventilation Valve (003-023) in Troubleshooting and Repair Manual B3.9, B4.5, and B5.9 Series Engines, Bulletin Number 3666087-02.
	
Piston rings not sealing (blue smoke).	Perform a compression check and correct as required. Refer to Air Compressor Carbon Buildup (012-003) in Troubleshooting and Repair Manual B3.9, B4.5, and B5.9 Series Engines, Bulletin Number 3666087-02.
	
Valves are not sealing correctly.	Check and adjust the valves. Refer to Engine Testing (In Chassis) (014-008) in Troubleshooting and Repair Manual B3.9, B4.5, and B5.9 Series Engines, Bulletin Number 3666087-02.
	
Contact an Authorized Cummins Repair Facility.	

Lubricating Oil in the Coolant

Cause	Correction
Bulk coolant supply is contaminated.	Check the bulk coolant supply. Refer to Coolant Recommendations and Specifications in Section 10. Drain the coolant and replace with non-contaminated coolant. Refer to Drain and Flush Cooling System in Section 7. Replace the coolant filters. Refer to Change Coolant Filter in Section 7.
	
Lubricating oil cooler is malfunctioning.	Check the oil cooler.
	
Cylinder head gasket is leaking.	Check the cylinder head gasket.
	
Cylinder head is cracked or porous.	Remove intake and exhaust manifolds. Check for evidence of coolant leak. If necessary, operate engine at low idle. Pressure-test the cylinder head.
	
Cylinder block is cracked or porous.	Inspect the cylinder block.
	
Contact a Cummins Authorized Repair Facility.	

Lubricating Oil Pressure High

Cause	Correction
Engine is cold.	Allow the engine to warm to operating temperature. If the engine will not reach operating temperature, refer to the Coolant Temperature Below Normal (Engine Running) symptom tree in this section.
OK	
Lubricating oil viscosity not correct.	Drain the oil and replace the oil filter. Refer to Change Lubricating Oil and Filters in Section 7. Use the correct oil. Refer to Lubricating Oil Recommendations and Specifications in Section 10.
OK	
Lubricating oil filter is not correct.	Replace the oil filter. Refer to Change Lubricating Oil and Filters in Section 7. Use the correct oil filter. Refer to Lubricating Oil Recommendations and Specifications in Section 10.
OK	
The pressure gauge is malfunctioning.	Install a temporary pressure gauge at main oil rifle. Compare the indications with the engine running. If required, replace the pressure sender. Refer to Lubricating Oil Pressure Sensor, OEM (007-052) in Troubleshooting and Repair Manual B3.9, B4.5, and B5.9 Series Engines, Bulletin Number 3666087-02. If required, replace the pressure gauge. Refer to Oil Pressure Gauge Removal/ Installation in Section 7.
OK	
Pressure regulator valve has malfunctioned.	Check and replace valve. Refer to Lubricating Oil Pressure Regulator (Main Rifle) (007-029) in Troubleshooting and Repair Manual B3.9, B4.5, and B5.9 Series Engines, Bulletin Number 3666087-02.
OK	

Lubricating Oil Pressure High (Cont)

Lubricating oil pump installation not correct.	Verify that the correct lubricating oil pump and o-rings are installed. Refer to Lubricating Oil Pump (007-031) in Troubleshooting and Repair Manual B3.9, B4.5, and B5.9 Series Engines, Bulletin Number 3666087-02.
	
Contact an Authorized Cummins Repair Facility.	

Lubricating Oil Pressure Low

Cause	Correction
Lubricating oil level is low.	Check and replenish lubricating oil. Refer to Check Engine Oil Level in Section 7.
OK	
Cylinder head core and expansion plugs leaking or misassembled.	Check cylinder head. Refer to Cylinder Head (002-004) in Troubleshooting and Repair Manual B3.9, B4.5, and B5.9 Series Engines, Bulletin Number 3666087-02.
OK	
Lubricating oil filter is diluted.	Refer to the Lubricating Oil Contaminated symptom tree in this section.
OK	
Lubricating oil filter is plugged.	Change the oil and filter. Refer to Change Lubricating Oil and Filters in Section 7. Verify the oil change interval is correct.
OK	
The pressure gauge is malfunctioning.	Check for electrical faults for the pressure gauge wiring. Refer to Drawing 10423 Sheet 1 in Section 13. Correct any electrical faults. Ensure that power and grounding are connected. Ensure that the field wire to the sender is not open or shorted to ground. Correct any electrical faults. Install a temporary pressure gauge at main oil rifle. Compare the indications with the engine running. If required, replace the pressure sender. Refer to Lubricating Oil Pressure Sensor, OEM (007-052) in Troubleshooting and Repair Manual B3.9, B4.5, and B5.9 Series Engines, Bulletin Number 3666087-02. If required, replace the pressure gauge. Refer to Oil Pressure Gauge Removal/ Installation in Section 7.
OK	

Lubricating Oil Pressure Low (Cont)

Oil pressure switch fails to open the contacts on running pressure. The Low Oil Pressure Light remains illuminated yet the oil pressure gauge indicates normal pressure when the engine is running.	Check for a short circuit in the wiring to the pressure switch or in the wiring to the remote Fire Pump Controller. Refer to Drawing 10423 Sheet 1 in Section 13. Correct any electrical faults. If required, replace the oil pressure switch. Refer to Oil Pressure Switch Removal/ Installation in Section 7.
OK	
Lubricating oil filter is not correct.	Replace the oil filter. Refer to Change Lubricating Oil and Filters in Section 7. Use the correct oil filter. Refer to Lubricating Oil Recommendations and Specifications in Section 10.
OK	
Pressure regulator valve has malfunctioned.	Check and replace valve. Refer to Lubricating Oil Pressure Regulator (Main Rifle) (007-029) in Troubleshooting and Repair Manual B3.9, B4.5, and B5.9 Series Engines, Bulletin Number 3666087-02.
OK	
Lubricating oil cooler is plugged.	Check the oil cooler. Refer to Lubricating Oil Cooler (007-003) in Troubleshooting and Repair Manual B3.9, B4.5, and B5.9 Series Engines, Bulletin Number 3666087-02.
OK	
Lubricating oil cooler was replaced with shipping plugs left in cooler.	Check the oil cooler. Refer to Lubricating Oil Cooler (007-003) in Troubleshooting and Repair Manual B3.9, B4.5, and B5.9 Series Engines, Bulletin Number 3666087-02.
OK	
Lubricating oil pump is malfunctioning.	Inspect the lubricating oil pump. Refer to Lubricating Oil Pump (007-031) in Troubleshooting and Repair Manual B3.9, B4.5, and B5.9 Series Engines, Bulletin Number 3666087-02.
OK	

Lubricating Oil Pressure Low (Cont)

Lubricating oil suction or transfer tube is loose or broken, or the gasket or o-rings are leaking.	Remove and inspect the oil pan or suction tube. Refer to Lubricating Oil Pan (007-025) in Troubleshooting and Repair Manual B3.9, B4.5, and B5.9 Series Engines, Bulletin Number 3666087-02.
	
Main bearing capscrews are loose, worn or not tightened correctly.	Check the torque on the main bearing capscrews. Inspect the capscrews for wear. Refer to Bearings, Main (001-006) in Troubleshooting and Repair Manual B3.9, B4.5, and B5.9 Series Engines, Bulletin Number 3666087-02.
	
Main bearings are damaged or worn, or the wrong bearings are installed.	Inspect the main bearings for damage, excessive wear, and the correct part number. Refer to Bearings, Main (001-006) in Troubleshooting and Repair Manual B3.9, B4.5, and B5.9 Series Engines, Bulletin Number 3666087-02.
	
Camshaft journals and number 1 bushing are severely damaged.	Inspect the camshaft journals and number 1 bushing for wear. Refer to Camshaft (001-008) or Camshaft Bushings (001-010) in Troubleshooting and Repair Manual B3.9, B4.5, and B5.9 Series Engines, Bulletin Number 3666087-02.
	
Contact an Authorized Cummins Repair Facility.	

Oil Level Rises

NOTE: Oil level may increase due to thermal expansion as the engine warms up and then decrease as the engine cools down. Slight variations due to temperature changes are normal.

Cause	Correction
Excessive oil has been added to the engine.	Drain the excess oil. Refer to Change Lubricating Oil and Filters in Section 7.
	
Fuel is leaking into the oil system.	Troubleshoot as per Lubricating Oil Contaminated in this section.
	
Coolant is leaking into the oil system.	Troubleshoot as per Lubricating Oil Contaminated in this section.
	
Contact an Authorized Cummins Repair Facility.	

Lubricating Oil Sludge in the Crankcase Excessive

Cause	Correction
Bulk oil supply is contaminated.	Check the bulk oil supply. Replace it is necessary. Refer to Lubricating Oil Recommendations and Specifications in Section 10. Drain the oil and replace with non-contaminated oil. Also, replace the oil filter. Refer to Change Lubricating Oil and Filters in Section 7.
	
Coolant temperature is below specification.	Refer to the Coolant Temperature Below Normal (Engine Running) symptom tree in this section.
	
Crankcase ventilation system is plugged.	Check and clean the crankcase breather and vent tube. Refer to Crankcase Breather Tube (003-018) in Troubleshooting and Repair Manual B3.9, B4.5, and B5.9 Series Engines, Bulletin Number 3666087-02.
	
Fuel grade is not correct for the application or the fuel quality is poor.	Operate the engine from a tank of high-quality fuel. Refer to Fuel Recommendations and Specifications in Section 10.
	
Lubricating oil does not meet specifications for operating conditions.	Check the grade and type of oil. Refer to Lubricating Oil Recommendations and Specifications in Section 10. If the wrong type or grade of oil is present, drain and replace it. Refer to Change Lubricating Oil and Filters in Section 7.
	
Lubricating oil drain interval is excessive.	Verify the correct lubricating oil drain interval. Refer to Change Lubricating Oil and Filters in Section 7.
	

Lubricating Oil Sludge in the Crankcase Excessive (Cont)

Lubricating oil is contaminated with coolant or fuel.	Go to the Lubricating Oil Contaminated symptom tree in this section.
	
Crankcase pressure is excessive.	Check for excessive blowby. Refer to the Crankcase Gases (Blowby) Excessive symptom tree in this section.
	
Closed crankcase ventilation hoses are leaking or damaged.	Inspect the closed crankcase ventilation system hoses and connections for leaks, obstruction, or damage. Refer to Closed Crankcase Ventilation Hoses (003-024) in Troubleshooting and Repair Manual B3.9, B4.5, and B5.9 Series Engines, Bulletin Number 3666087-02.
	
Close crankcase ventilation valve is leaking or malfunctioning.	Inspect the closed crankcase ventilation valve for obstruction or damage. Refer to Closed Crankcase Ventilation Valve (003-023) in Troubleshooting and Repair Manual B3.9, B4.5, and B5.9 Series Engines, Bulletin Number 3666087-02.
	
Refer to a Cummins Authorized Repair Facility.	

Turbocharger Leaks Engine Oil or Fuel

Cause	Correction
Engine is operating for extended periods under light or no-load conditions (slobbering).	Operate the engine at idle speed for maintenance activities only.
OK	
Lubricating oil or fuel is entering the turbocharger.	Check the turbocharger for oil or fuel in the piping. Refer to Turbocharger (010-033) in Troubleshooting and Repair Manual B3.9, B4.5, and B5.9 Series Engines, Bulletin Number 3666087-02.
OK	
Turbocharger drain line is restricted.	Remove the turbocharger drain line and check for restriction. Clean or replace the drain line. Refer to Turbocharger Oil Drain Line (010-045) in Troubleshooting and Repair Manual B3.9, B4.5, and B5.9 Series Engines, Bulletin Number 3666087-02.
OK	
Turbocharger oil supply line loose or leaking.	Check and tighten oil supply line fitting(s), if necessary. Refer to Turbocharger Oil Supply Line (010-046) in Troubleshooting and Repair Manual B3.9, B4.5, and B5.9 Series Engines, Bulletin Number 3666087-02.
OK	
Contact an Authorized Cummins Repair Facility.	

Crankcase Gases (Blowby) - Excessive

NOTE: Crankcase gases or blowby may be measured. Refer to Crankcase Blowby, Measure (014-010) in Troubleshooting and Repair Manual B3.9, B4.5, and B5.9 Series Engines, Bulletin Number 3666087-02.

Cause	Correction
Cylinder head valve guides are excessively worn.	Check the valve guides for wear. Replace the cylinder head if necessary. Refer to Cylinder Head (002-004) in Troubleshooting and Repair Manual B3.9, B4.5, and B5.9 Series Engines, Bulletin Number 3666087-02.
	
Pistons or piston rings are worn, damaged, or not correct.	Check the pistons for correct part numbers. Refer to Control Parts List (CPL), Bulletin 3379133 or 4021327. Check the pistons and rings for wear and damage. Refer to Piston (001-043) and Piston Rings (001-047) in Troubleshooting and Repair Manual B3.9, B4.5, and B5.9 Series Engines, Bulletin Number 3666087-02.
	
Turbocharger oil seal is leaking.	Check the turbocharger compressor and turbine seals. Refer to Turbocharger (010-033) in Troubleshooting and Repair Manual B3.9, B4.5, and B5.9 Series Engines, Bulletin Number 3666087-02.
	
Contact an Authorized Cummins Repair Facility.	

Engine Overspeed Trip

NOTE: An engine overspeed trip occurs when the engine's speed exceeds the value specified on the Field Setting Tag described in Section 2. The trip isolates the fuel supply to the engine and it stops immediately. The trip is indicated on the local control panel and inside the local control panel on the speed switch. Additionally, a trip output is supplied to the fire protection system for remote display.

Cause	Correction
Engine actually operated at too great a speed due to catastrophic load failure such as pipe break, pump mechanical failure, or loss of suction.	Correct the cause of the load failure.
	
Engine actually operated at too great a speed due to configuration error.	Check rated speed setting as specified on the Field Setting Tag described in Section 2. Refer to Rated Speed Setpoint Adjustment and Testing in Section 3.
	
Overspeed switch is set at too low a setpoint.	Check overspeed speed setting as specified on the Field Setting Tag described in Section 2. Refer to Overspeed Setpoint Adjustment and Testing in Section 3.
	
Speed switch wiring failure has occurred.	Check continuity and insulation from ground for the signal power wiring and ground wiring to the speed switch. Refer to Drawing 10423 Sheet 1 in Section 13. Replace defective components and repair electrical faults.
	
Speed switch failure has occurred.	If the speed switch fails to operate as per Overspeed Setpoint Adjustment and Testing in Section 3, replace the speed switch. Refer to Overspeed Switch Removal/Installation in Section 7.
	
Contact an Authorized Cummins Repair Facility.	

Tachometer Does Not Indicate Engine Speed

Cause	Correction
Fuse F4 has opened.	If required, replace Fuse F4. Locate and correct the electrical fault that caused the fuse to operate. Refer to Drawing 10423 Sheet 1 in Section 13.
	
An electrical fault exists in the tachometer power and grounding circuits.	Check continuity and insulation from ground for the power wiring and ground wiring to the tachometer. Refer to Drawing 10423 Sheet 1 in Section 13. Replace defective components and repair electrical faults.
	
An electrical fault exists in the speed sensor input circuit. This fault may also cause a failure in the crank terminate signal to the fire protection system.	Check continuity and insulation from ground for the speed sensor circuit. Refer to Drawing 10423 Sheet 1 in Section 13. Replace defective components and repair electrical faults.
	
The speed sensor has failed.	With the engine running, check the signal from the speed sensor with an oscilloscope or pulse counter. Replace the speed sensor is it has failed. Refer to Speed Sensor Removal/Installation in Section 7.
	
The tachometer has failed.	Check the operation of the tachometer with a pulse generator. Replace the tachometer is it has failed. Refer to Tachometer Removal/Installation in Section 7.
	
Contact an Authorized Cummins Repair Facility.	

This Page Intentionally Left Blank

Section 13 - Assembly Drawings (1)

Description	Drawing No.	Sheet No	Revision Level
Drawing, Installation, Fire Pump, CFP59-F10/20/40/50 (6BTA5.9-G3)	8704		L
Drawing, Installation, Fire Pump, CFP59-F15/25 (6BT5.9-C165)	8705		G
Drawing, Installation, Fire Pump, CFP59-F45 (6BTA5.9-C174)	8706		H
Drawing, Installation, Fire Pump, CFP59-F55 (6BTA5.9)	8713		E
Assembly, Power Module, CFP59-F10-50, F15, F45	8533		H
Assembly, Power Module, CFP59-F55	9562		D
Assembly, Air Intake, CFP39, CFP59-F10-50, F15, F45	8534		E
Assembly, Air Cleaner, CFP59-F55	9565		C
Assembly, Air Filter Cover Implementation Date 04-09	14798		B
Assembly, Mounting, Fire Pump Engine 6B	8579		D
Leg, Engine Support, Rear	8412		E
Leg, Engine Support, Front	10576		A
Assembly, Pulley Guard	8591		E
Assembly, Pulley Guard, CFP59-F55	9780		A
Assembly, Exhaust Shielding, 6B	8694		A
Exhaust, 3" Bellows w/Elbow	8550		D
Assembly, Coolant Heater 6B	8556		D
Assembly, Throttle Positioning, CFP59-F15, F25, F45	8585		A
Assembly, Fuel Supply/Return Lines, CFP59-F10/20/40/50	8568		D
Assembly, Fuel Supply/Return Lines, CFP59-F15/25/45	9752		E
Assembly, W-W Heat Exchanger Cooling Assembly w/o CAC 4B, 6B	8650		H
Assembly, Raw Water Cooling Loop, 3/4" Generic	8682		D
Assembly, Eng, FP, CFP59-F10/20/40/50 (BTA5.9-G3)	8724		B
Assembly, Eng, FP, CFP59-F15, F25 (6BT5.9-C165)	8725		B
Assembly, Eng, FP, CFP59-F45 (6BTA5.9-C174)	8726		B
Assembly, Eng, FP, Marine, CFP59-F55 (6B5.9TA)	8741		A
Assembly, Operator's Station, 6B	9560		E
Assembly, Instrument Panel, 12VDC, Alternate Beginning 09-06	10452		E
Assembly, Instrument Panel, 12VDC, New Effective Date 09-08	13236		-
Assembly, Instrument Panel, 24VDC, Alternate Beginning 09-06	10453		E
Assembly, Instrument Panel, 24VDC, New Effective Date 09-08	13237		-
Assembly Sensor Package, 4B/6B/QSB, Non-ECM	9568		A
Hose, Water, CFP59	9634		D
Misc Piping, Cooling Loop, Raw Water, 6B, w/o CAC	11148		C
Assembly, Solenoid Override, CFP59-F10/20/40/50	9699		A
Assembly, Solenoid Override, CFP59-F25/45	9839		A
Fuel Line, Flex Extension 1/4"NPT Obsolete 12-09	10235		-
Assembly, Drive Shaft & Guard, SAE#3, Size 1410	10164		A
Assembly, Drive Shaft & Guard, SAE#3, Size 1480	10165		A
Assembly, Stub-Shaft & Guard SAE#3, 1.50" QSB, QSC, 4B, 6B, 6C	8618		B
Assembly, Stub-Shaft & Guard SAE#3, 2.25" QSB, QSC, 4B, 6B, 6C	8619		B
Kit, Loose Wires, QSB, QSC, 4B, 6B, 6C	9767		D
General Layout, Fire Pump, CFP59	P59_F55_GEN		D
General Layout, Fire Pump, CFP59	CFP59_GEN		E
Schematic, Control Panel Alternate Beginning 09/06	10423	1-6	E
Harness, Engine	8513	1-2	L

(1) Also see Engine Identification in Sec 2 the System Diagrams in Sec 6. The most current revisions to these drawings and releated documents accessible at: http://www.cumminsfirepower.com/products.html.

Section 13 - Assembly Drawings (1)

THIS PAGE INTENTIONALLY LEFT BLANK

BILL OF MATERIAL			
ITEM	QTY	DESCRIPTION	PART NUMBER
1	1	ASSEMBLY, POWER MODULE, COMMON, FIREPUMP, NFP-659	8533
2	1	ASSEMBLY, COOLANT HEATING, 6B	8556
3	1	ASSEMBLY, FUEL CONNECTION	8568
4	1	ASSEMBLY, HEAT EXCHANGER W/O CAC, FIREPUMP, NFP-659	8650
5	1	ASSEMBLY, RAW WATER COOLING, 3/4" NPT, FIREPUMP	8682
6	1	ASSEMBLY, ENGINE, 6BTA5.9G3	8724
7	1	ASSEMBLY, OPERATORS STATION, 6B MARINE, FIREPUMP	9560
8	1	ASSEMBLY, SENSOR PACKAGE, FIREPUMP	9568
9	1	MISC PIPING, RAW WATER, 6B, FIREPUMP	9634
10	1	KIT, FUEL SOLENOID OVERIDE, FIREPUMP	9699
11	2	FUEL LINE, #6, 1/4" NPT x 12" LG	10235
12	1	COVER, AIR CLEANER, FITS 4" O.D. TUBING	14798
13	1	CLAMP, T-BOLT, 4.03-4.34	13164-0425

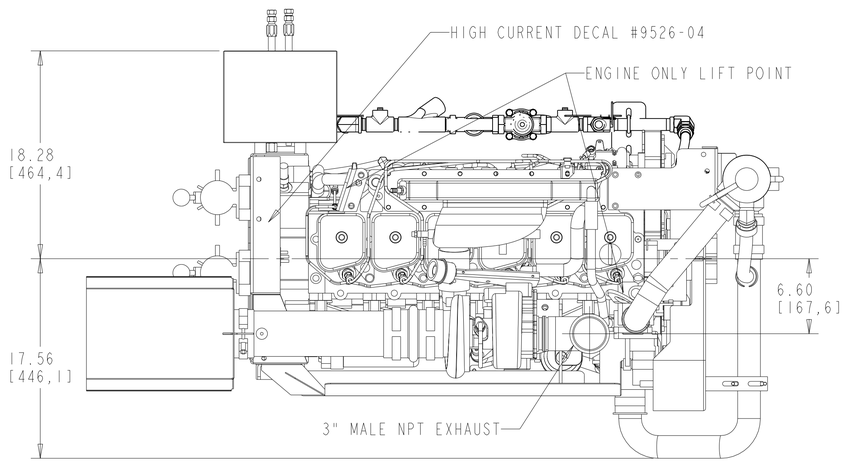

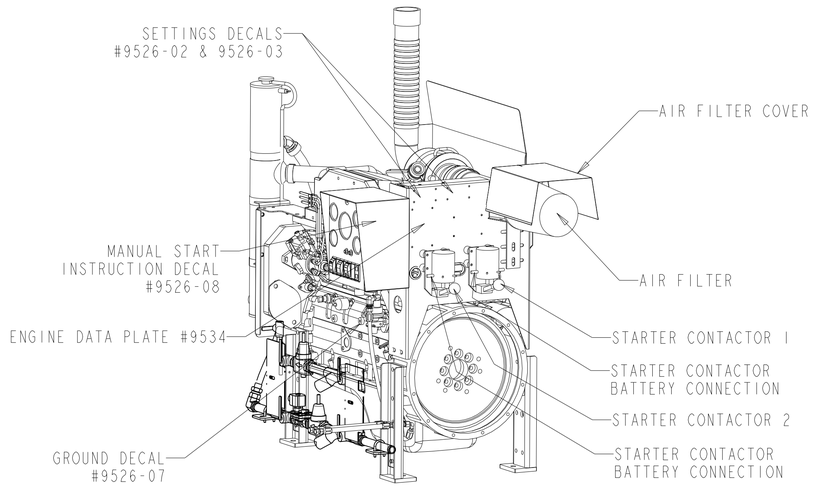

SCALE 0.100

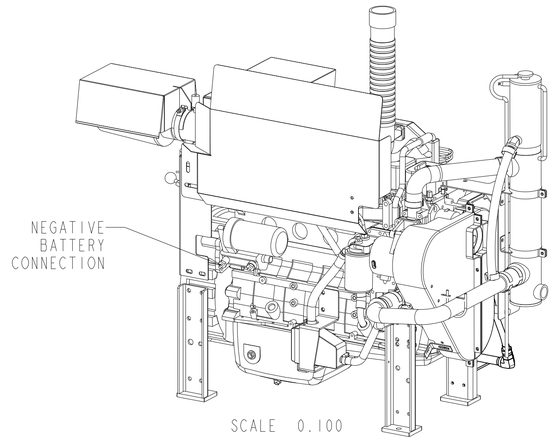

SCALE 0.100

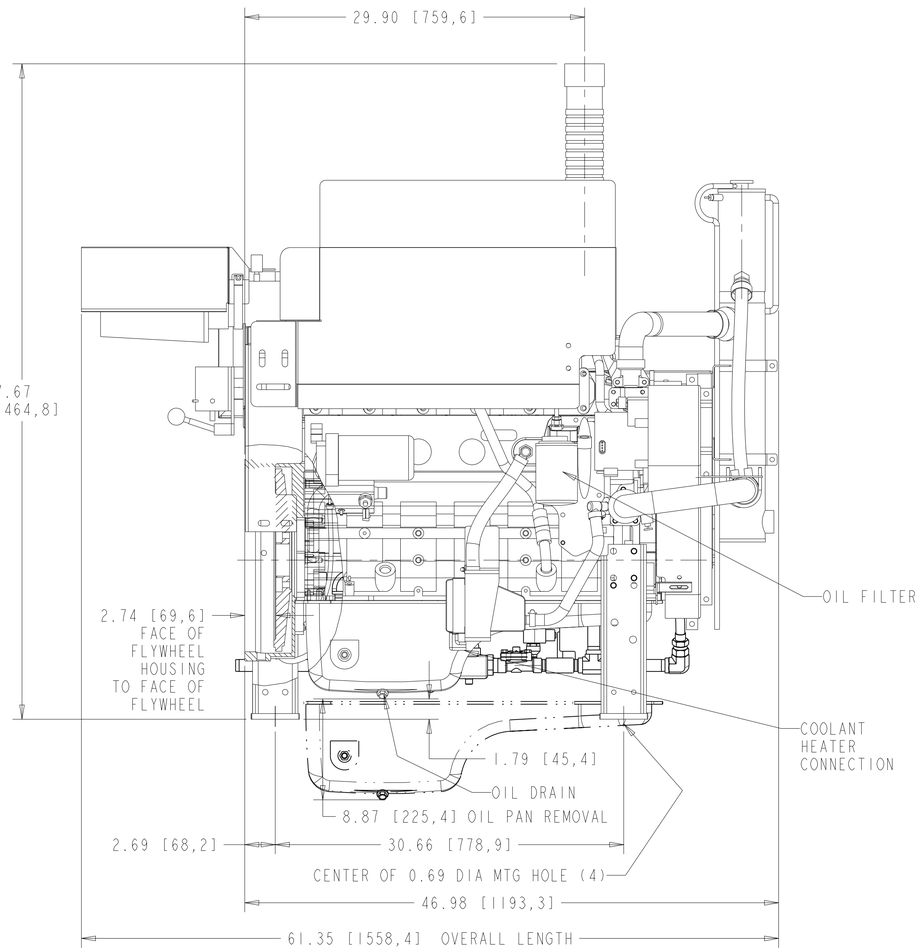

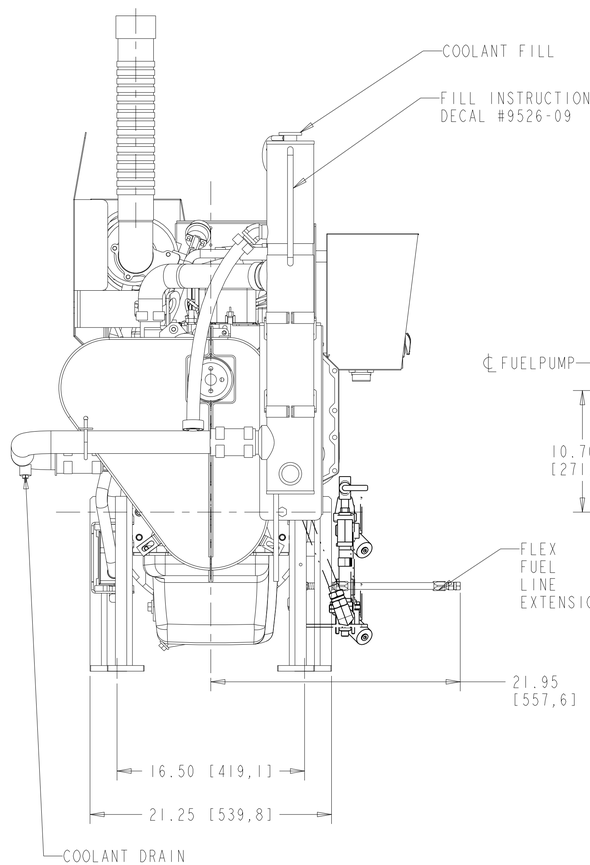

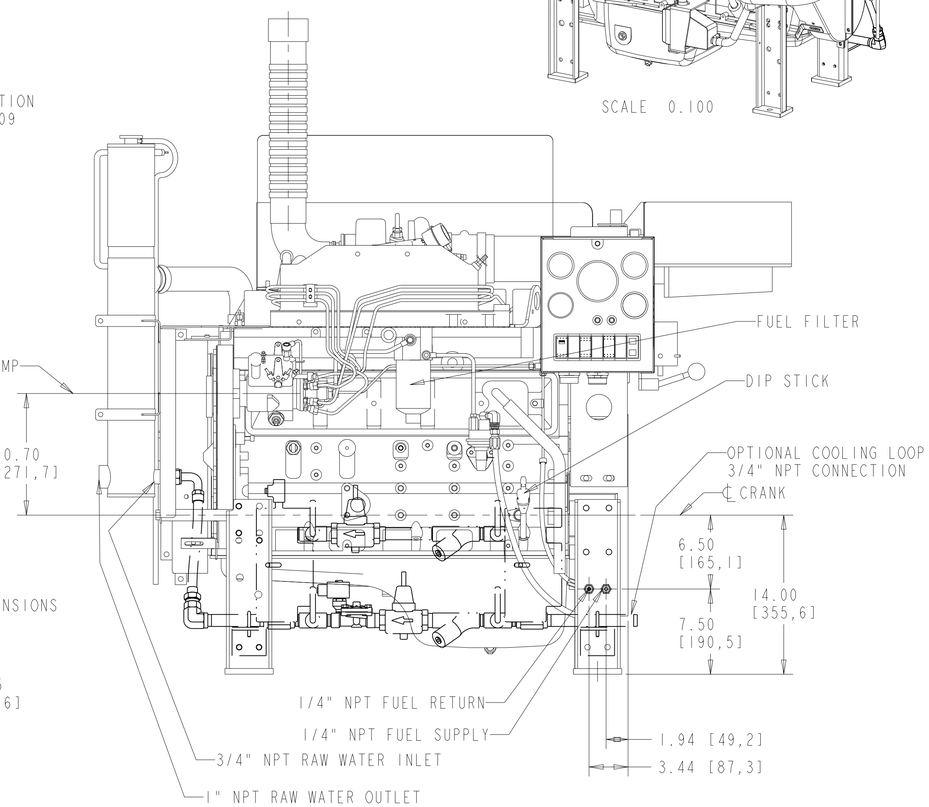

REV		DESCRIPTION OF REVISION	REV BY	DATE
L	2009-158	14798 WAS 13439, VIEW UPDATES	DAVE N	09APR2009
REV	ENF			

This document contains confidential and trade secret information, is the property of Cummins Fire Power LLC and is given to the receiver in confidence. The receiver, by receiving and retaining of the document accepts the document in confidence and agrees that, except as authorized in writing by Cummins Fire Power LLC, the receiver will not disclose the contents or the confidential or trade secret information therein, (2) not copy the document, (3) not disclose to others either the document or the confidential or trade secret information therein, and (4) upon completion of the need to retain the document, return the document to Cummins Fire Power LLC, destroy it, and all material copied therefrom. COPYRIGHT Cummins Fire Power LLC

UNLESS OTHERWISE SPECIFIED ALL DIMENSION TOLERANCES ARE

ANGULAR DIMENSIONS ± 1°	IMPERIAL UNITS	METRIC UNITS
THIRD ANGLE PROJECTION	MACHINE TOLERANCES .XX ± 0.02 FOR TOLERANCES .XXX ± 0.008 FOR TOLERANCES .X ± 0.08	MACHINE TOLERANCES X ± 0.5 FOR TOLERANCES X.X ± 0.2 FOR TOLERANCES X.XX ± 0.08

CUMMINS FIRE POWER LLC
CORPORATE OFFICE
1600 BUERKLE ROAD
WHITE BEAR LAKE, MN
WWW.CUMMINSFIREPOWER.COM

CUSTOM DESIGN
AND UPFIT CENTER
875 LAWRENCE DRIVE
DEPERE, WISCONSIN

ASMY, POWER MODULE, CFP59-F10/F20/F40/F50 FIREPUMP

DWG UNITS: IN/LB/S	DRAWN BY: DAVE N	DATE: 24FEB2004
PRO-ENGINEER		REF DRWG:
SCALE: 0.150	SHEET 1 OF 1	DRAWING NO: 8704
EST WEIGHT: 1303.000		

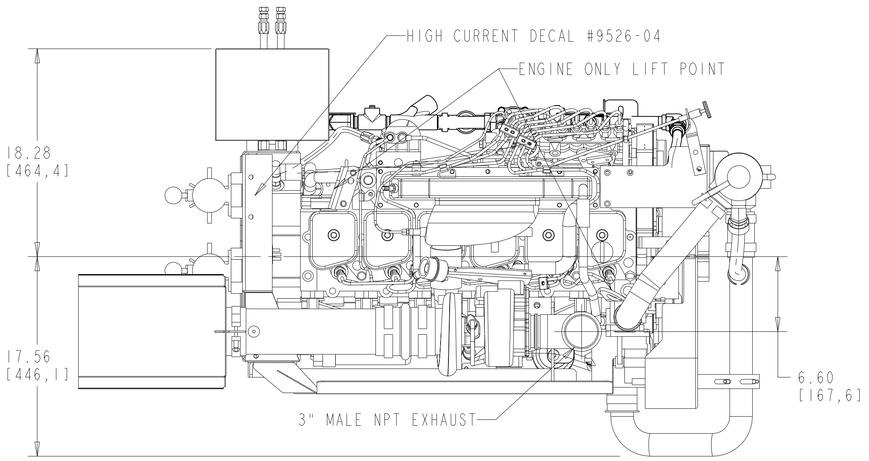

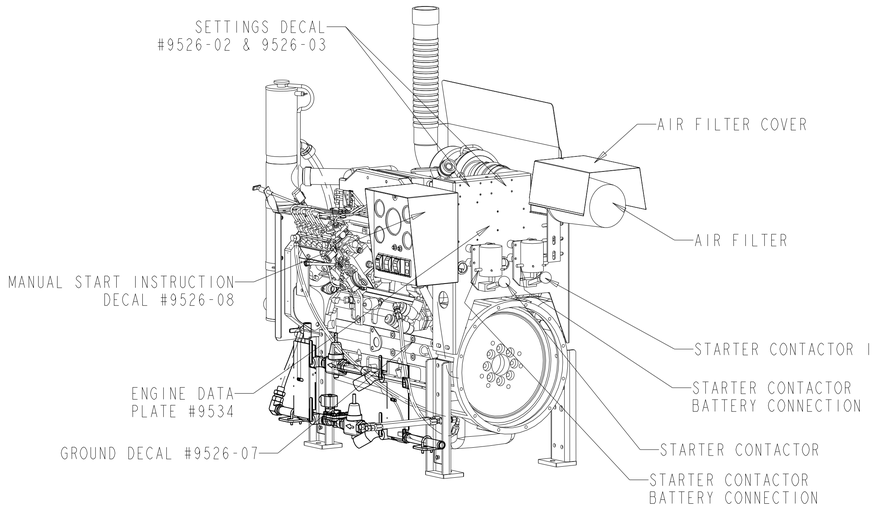

BILL OF MATERIAL			
ITEM	QTY	DESCRIPTION	PART NUMBER
1	1	ASSEMBLY, POWER MODULE, COMMON, FIREPUMP, NFP-659	8533
2	1	ASSEMBLY, COOLANT HEATING, 6B	8556
3	1	ASSEMBLY, THROTTLE POSITION, FIREPUMP	8585
4	1	ASSEMBLY, HEAT EXCHANGER W/O CAC, FIREPUMP, NFP-659	8650
5	1	ASSEMBLY, RAW WATER COOLING, 3/4" NPT, FIREPUMP	8682
6	1	ASSEMBLY, ENGINE, 6BTA-C165, FIREPUMP	8725
7	1	ASSEMBLY, OPERATORS STATION, 6B MARINE, FIREPUMP	9560
8	1	ASSEMBLY, SENSOR PACKAGE, FIREPUMP	9568
9	1	MISC PIPING, RAW WATER, 6B, FIREPUMP	9634
10	1	ASSY, FUEL LINE, REF 8705/6, CFP59-F15, F25, F45, CFP39-F15	9752
11	1	ASSEMBLY, SOLENOID OVERIDE, FIREPUMP	9839
12	2	FUEL LINE, #6, 1/4" NPT x 12" LG	10235
13	1	COVER, AIR CLEANER, FITS 4" O.D. TUBING	14798
14	1	CLAMP, T-BOLT, 4.03-4.34	13164-0425

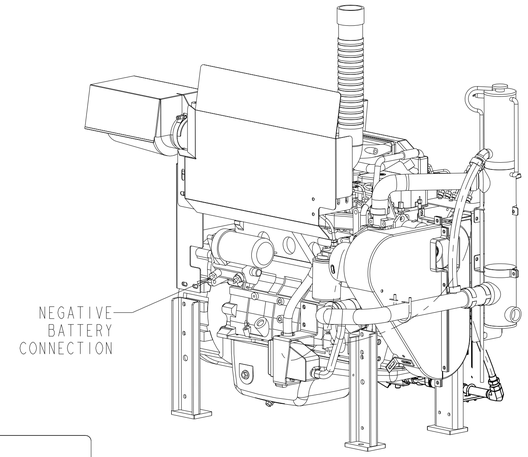

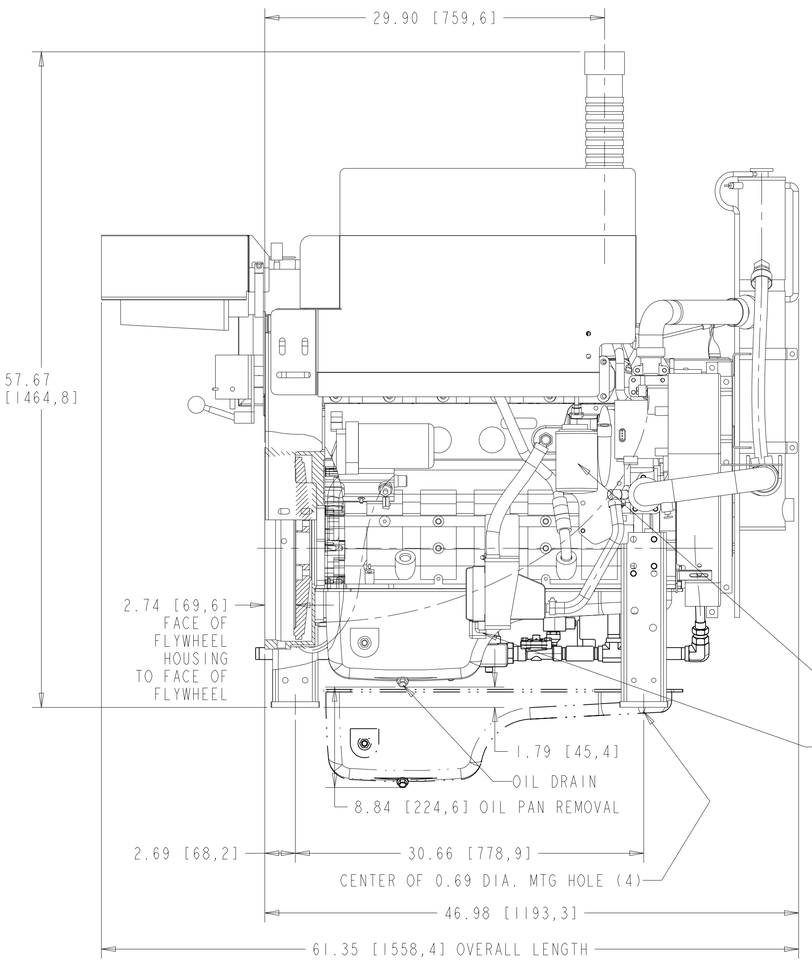

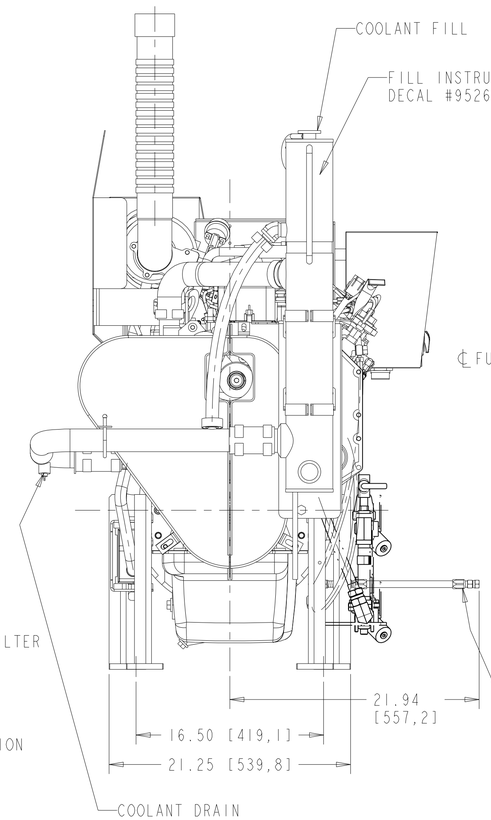

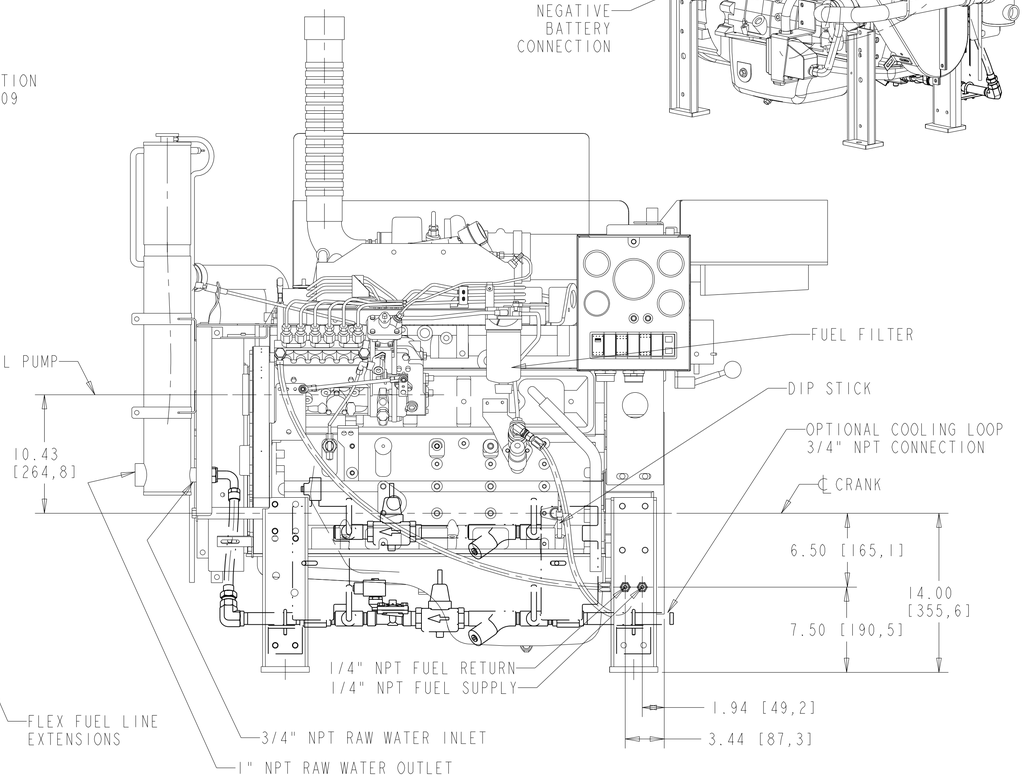

REV				
G	2009-158	14798 WAS 13439, VIEW UPDATES	DAVE N	09APR2009
REV	ENF	DESCRIPTION OF REVISION	REV BY	DATE

This document contains confidential and trade secret information, is the property of Cummins Fire Power LLC and is given to the receiver in confidence. The receiver, by receiving and retaining of the document accepts the confidential nature thereof and agrees not to use the document in any way to Cummins Wheel, it will not use the document in any copy thereof or the confidential or trade secret information therein, (2) not copy the document, (3) not disclose the document or the confidential or trade secret information therein, and (4) upon completion of the need to retain the document, or upon demand, return the document, all copies thereof, and all material copied therefrom. COPYRIGHT Cummins Fire Power LLC

UNLESS OTHERWISE SPECIFIED ALL DIMENSION TOLERANCES ARE

ANGULAR DIMENSIONS ± 1° | IMPERIAL UNITS | METRIC UNITS

THIRD ANGLE PROJECTION

IMPERIAL UNITS	METRIC UNITS
MACHINE TOLERANCES .XX = ± 0.010	MACHINE TOLERANCES X = ± 0.2
FORM TOLERANCES .XX = ± 0.005	FORM TOLERANCES X = ± 0.1
FOR TOLERANCES .XXX = ± 0.000	FOR TOLERANCES X = ± 0.0

CUMMINS FIRE POWER LLC
CORPORATE OFFICE
1600 BUERKLE ROAD
WHITE BEAR LAKE, MN
WWW.CUMMINSFIREPOWER.COM

CUSTOM DESIGN
AND UPFIT CENTER
875 LAWRENCE DRIVE
DEPERE, WISCONSIN

ASSEMBLY, CFP59-F15/25
FIREPUMP

DWG UNITS: IN/LB/S

DRAWN BY: DAVE N

DATE: 02JUL2004

PRO-ENGINEER

REF DRWG:

SCALE: 0.150

SHEET 1 OF 1

EST WEIGHT: 1352.596

DRAWING NO: 8705

BILL OF MATERIAL			
ITEM	QTY	DESCRIPTION	PART NUMBER
1	1	ASSEMBLY, POWER MODULE, COMMON, FIREPUMP, NFP-659	8533
2	1	ASSEMBLY, COOLANT HEATING, 6B	8556
3	1	ASSEMBLY, THROTTLE POSITION, FIREPUMP	8585
4	1	ASSEMBLY, HEAT EXCHANGER W/O CAC, FIREPUMP, NFP-659	8650
5	1	ASSEMBLY, RAW WATER COOLING, 3/4" NPT, FIREPUMP	8682
6	1	ASSEMBLY, ENGINE, 6BTA-C174, FIREPUMP	8726
7	1	ASSEMBLY, OPERATORS STATION, 6B MARINE, FIREPUMP	9560
8	1	ASSEMBLY, SENSOR PACKAGE, FIREPUMP	9568
9	1	MISC PIPING, RAW WATER, 6B, FIREPUMP	9634
10	1	ASSY, FUEL LINE, REF 8705/6, CFP59-F15, F25, F45, CFP39-F15	9752
11	1	ASSEMBLY, SOLENOID OVERIDE, FIREPUMP	9839
12	2	FUEL LINE, #6, 1/4" NPT x 12" LG	10235
13	1	COVER, AIR CLEANER, FITS 4" O.D. TUBING	14798
14	1	CLAMP, T-BOLT, 4.03-4.34	13164-0425

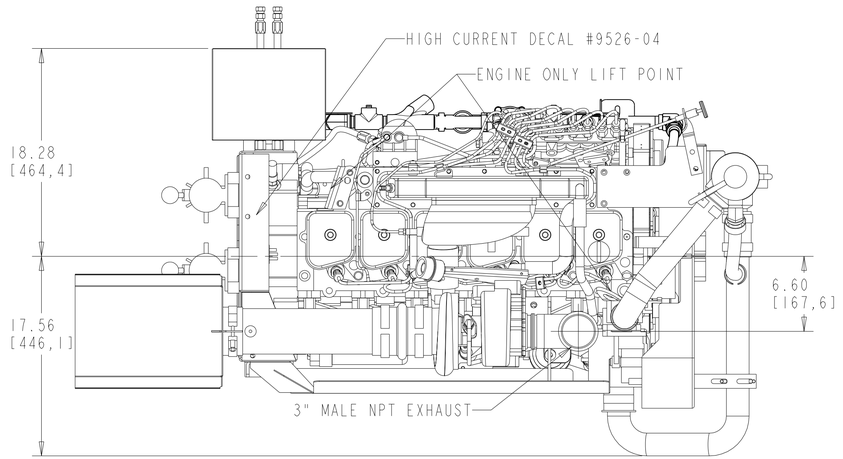

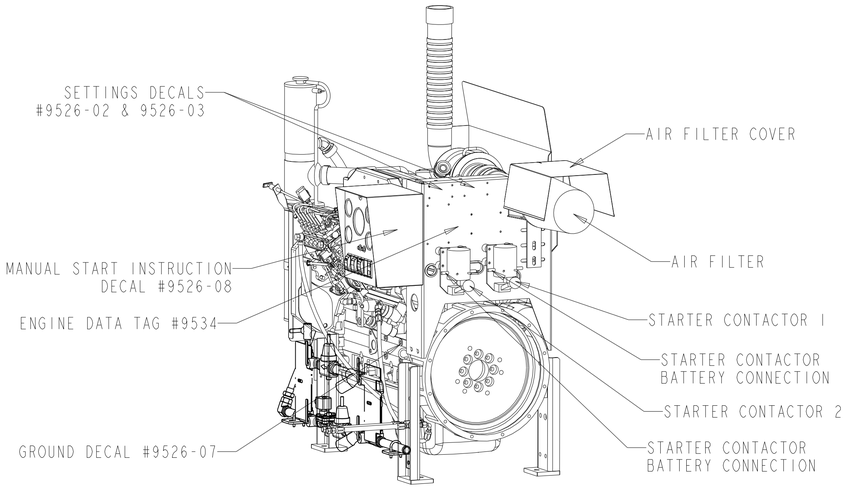

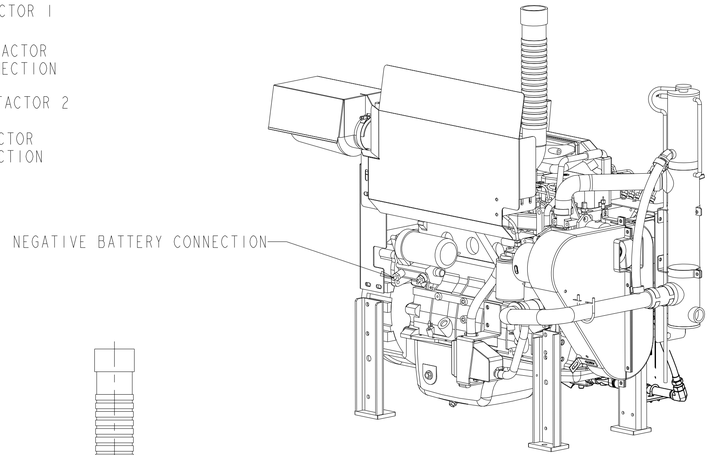

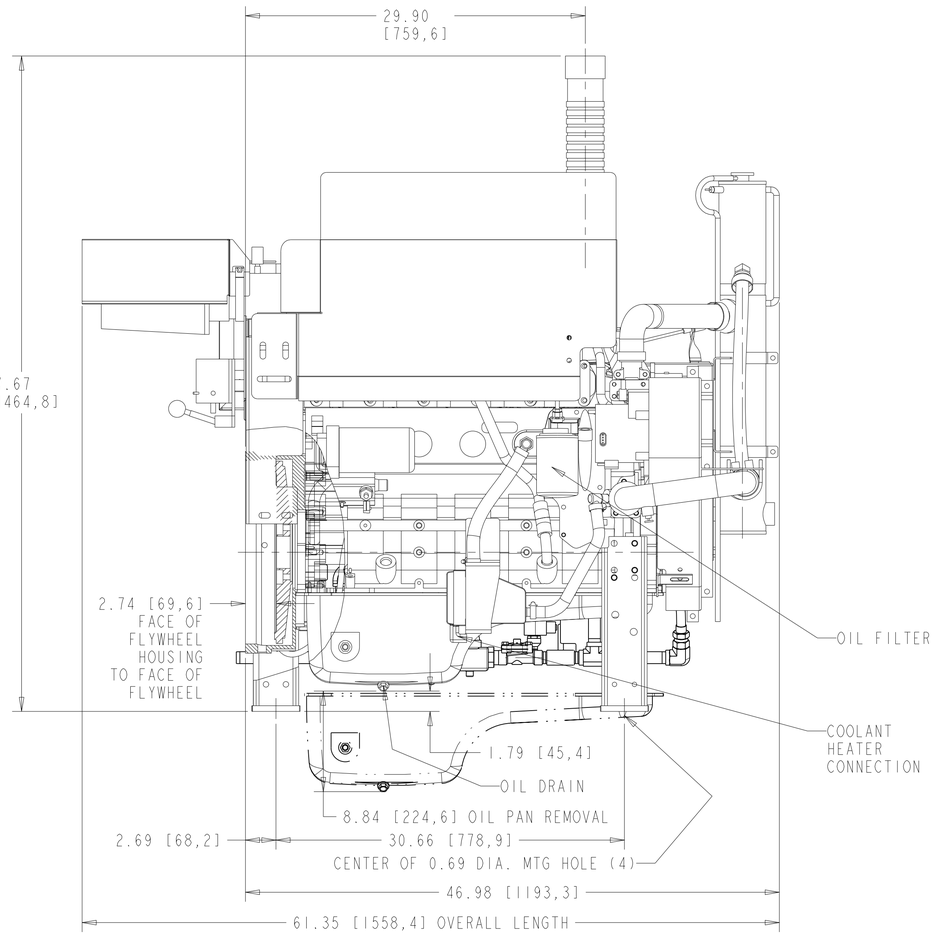

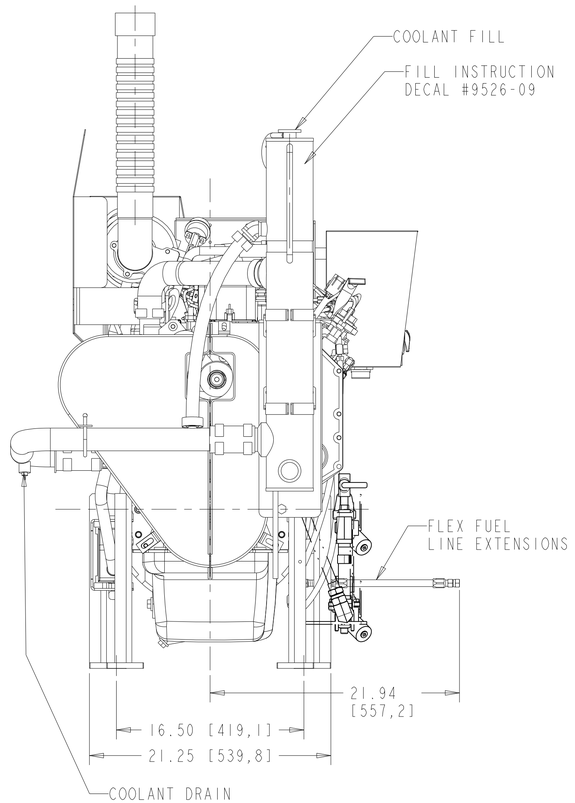

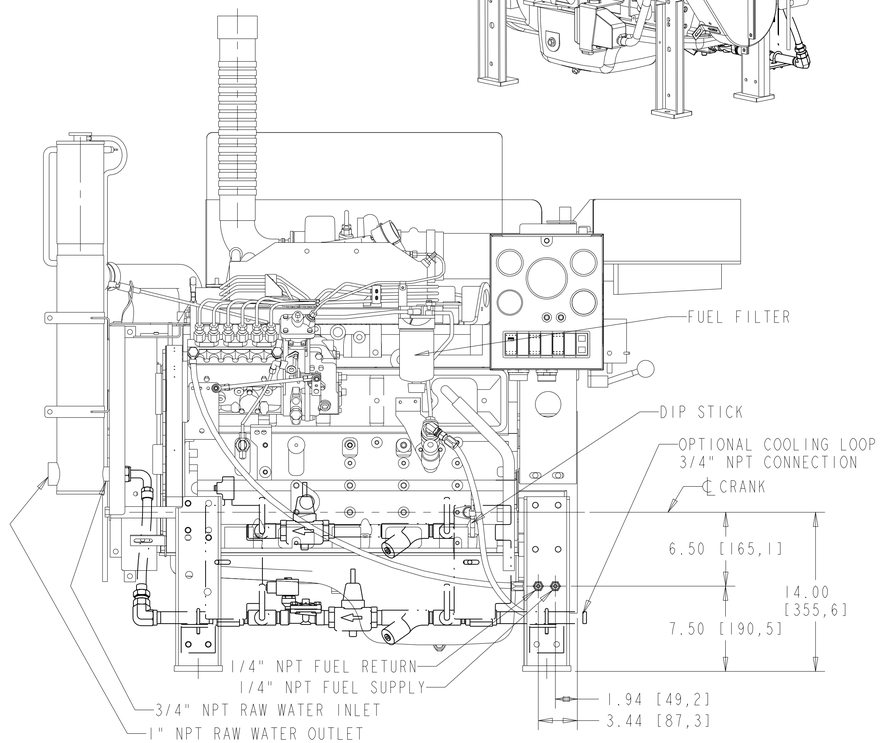

This document contains confidential and trade secret information, is the property of Cummins Fire Power LLC and is given to the receiver in confidence. The receiver, by receiving and retaining of the document accepts the document in confidence and agrees that, except as authorized in writing by Cummins Fire Power LLC, the receiver will not disclose the contents or trade secret information therein, (2) not copy the document, (3) not disclose to others either the document or the confidential or trade secret information therein, and (4) upon completion of the need to retain the document, return the document to Cummins Fire Power LLC, destroy it, and all material copied therefrom. COPYRIGHT Cummins Fire Power LLC

CUMMINS FIRE POWER LLC
CORPORATE OFFICE
1600 BUERKLE ROAD
WHITE BEAR LAKE, MN
WWW.CUMMINSFIREPOWER.COM

CUSTOM DESIGN
AND UPFIT CENTER
875 LAWRENCE DRIVE
DEPERE, WISCONSIN

ASSEMBLY, CFP59-F45
FirePump, 6BTA5.9-C174

UNLESS OTHERWISE SPECIFIED ALL DIMENSION TOLERANCES ARE
ANGULAR DIMENSIONS ± 1° | IMPERIAL UNITS | METRIC UNITS
THIRD ANGLE PROJECTION

	IMPERIAL UNITS	METRIC UNITS
MACHINE TOLERANCES	.XX ± 0.02	X.X ± 0.5
FORM TOLERANCES	.XXX ± 0.005	X.XX ± 0.13
FOR TOLERANCES	.XXXX ± 0.0005	X.XXX ± 0.013

DWG UNITS: IN/LB/S
DRAWN BY: DAVE N
DATE: 02JUL2004
PRO-ENGINEER
REF DRWG:
SCALE: 0.150
EST WEIGHT: 1303.000
SHEET 1 OF 1
DRAWING NO: 8706

REV		DESCRIPTION OF REVISION	REV BY	DATE
H	2009-158	14798 WAS 13439. VIEW UPDATES	DAVE N	10APR2009
REV	ENF	DESCRIPTION OF REVISION	REV BY	DATE

BILL OF MATERIAL			
ITEM	QTY	DESCRIPTION	PART NUMBER
1	1	ASSEMBLY, COOLANT HEATING, 6B	8556
2	1	ASSEMBLY, FUEL CONNECTION	8568
3	1	ASSEMBLY, HEAT EXCHANGER W/O CAC, FIREPUMP, NFP-659	8650
4	1	ASSEMBLY, RAW WATER COOLING, 3/4" NPT, FIREPUMP	8682
5	1	ASSEMBLY, ENGINE, 6B MARINE, FIREPUMP, CFP59--	8741
6	1	ASSEMBLY, OPERATORS STATION, 6B MARINE, FIREPUMP	9560
7	1	ASSEMBLY, POWER MODULE, 6B MARINE ENGINE, FIREPUMP, CFP59F55	9562
8	1	ASSEMBLY, SENSOR PACKAGE, FIREPUMP	9568
9	1	MISC PIPING, RAW WATER, 6B, FIREPUMP	9634
10	2	FUEL LINE, #6, 1/4" NPT x 12" LG	10235

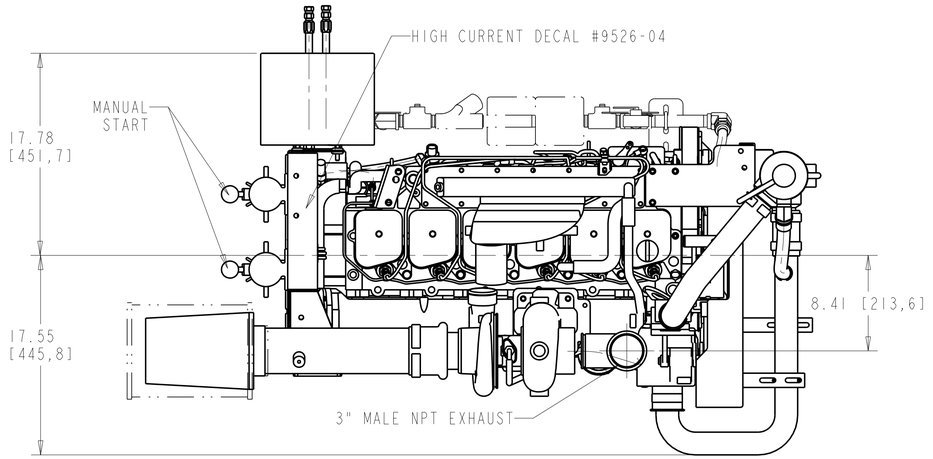

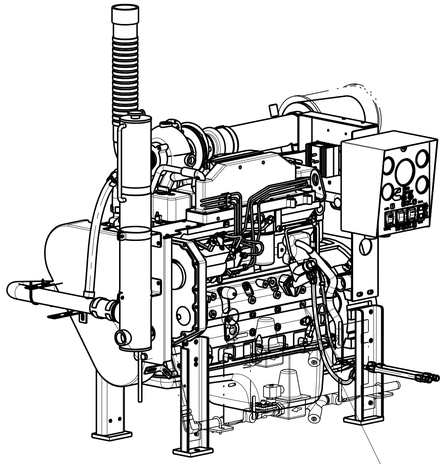

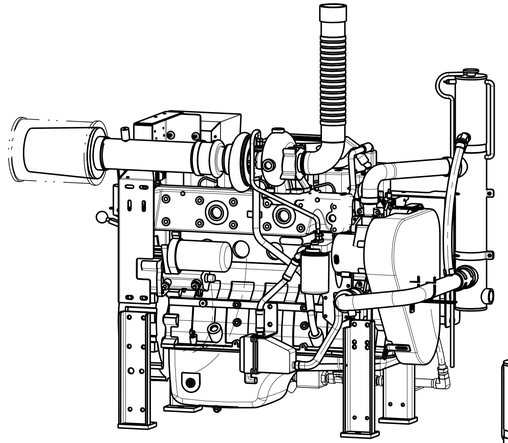

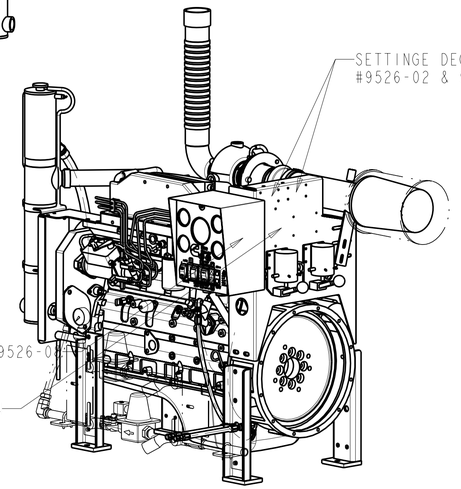

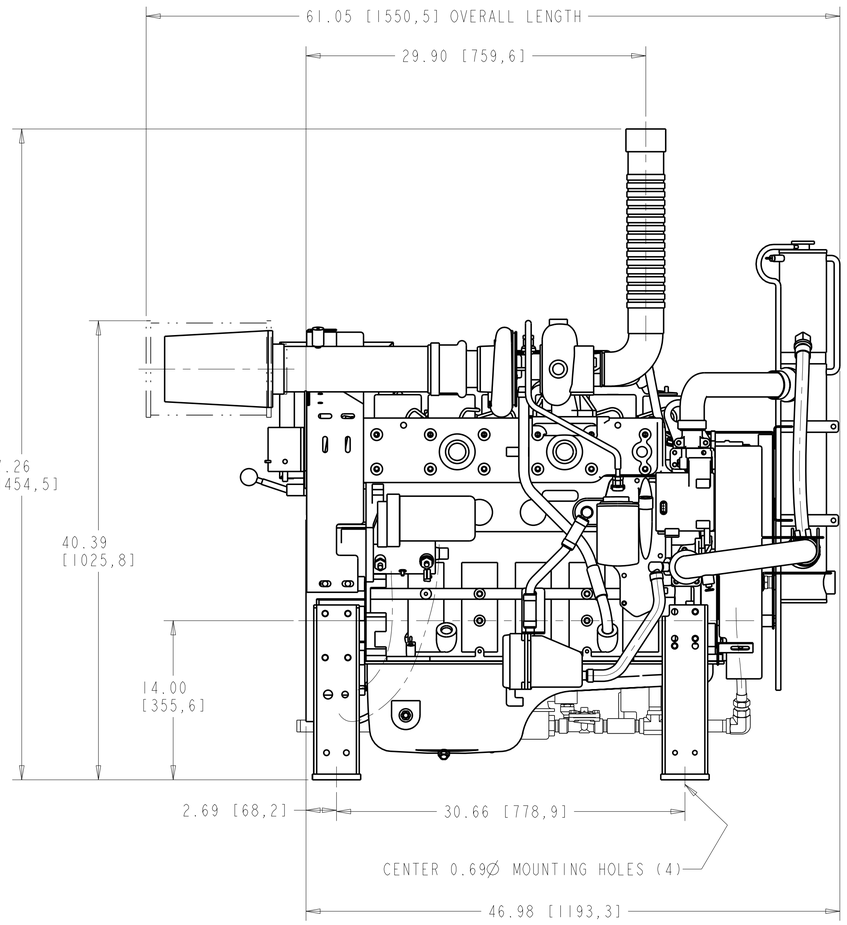

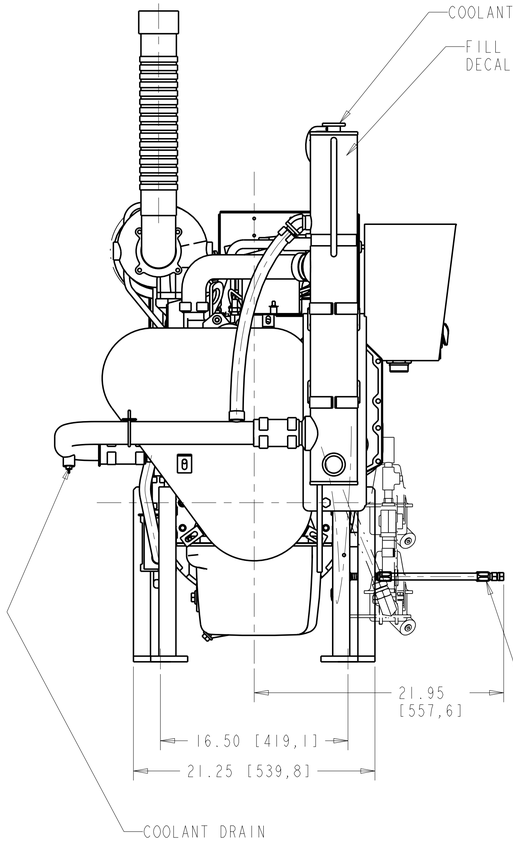

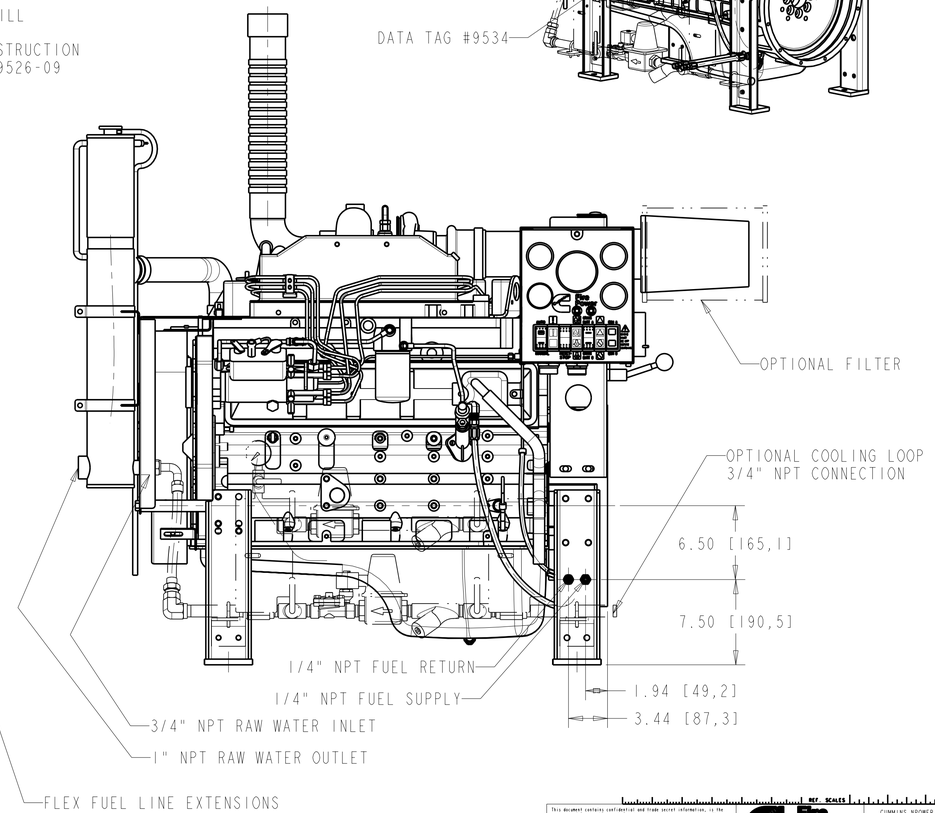

REV	DESCRIPTION OF REVISION	REV BY	DATE
E	REV PER OP STATION, AIR CLEANER	DAVE N	15DEC06

This document contains confidential and trade secret information, is the property of Cummins NPower, LLC and is given to the receiver in confidence. The receiver, by receiving and retaining of the document accepts the confidentiality obligations and agrees not to disclose the information to any Cummins NPower, LLC will not lose the document or any copy thereof or the confidential or trade secret information therein. It will not copy the document, or any part thereof, or any confidential or trade secret information therein, without the prior written consent of Cummins NPower, LLC and, at the expiration of the need for the document, or upon demand, return the document, all copies thereof, and all material copied therefrom. COPYRIGHT Cummins NPower, LLC

CUMMINS NPOWER, LLC
CORPORATE OFFICE
1600 BUERKLE ROAD
WHITE BEAR LAKE, MN
WWW.NPOWER.CUMMINS.COM

NPOWER SYSTEMS
DESIGN CENTER
875 LAWRENCE DRIVE
DEPERE, WISCONSIN

UNLESS OTHERWISE SPECIFIED ALL DIMENSION TOLERANCES ARE

ANGULAR DIMENSIONS ± 1° | IMPERIAL UNITS | METRIC UNITS | THIRD ANGLE PROJECTION

TITLE 1: ASSEMBLY, CFP59-F55
TITLE 2: FIREPUMP, 6B5.9TA

DWG UNITS: IN/LB/S | DRAWN BY: DAVE N | DATE: 10AUG2004
APPD BY: - | DATE: -
EST WEIGHT: 1138.000 | SCALE: 0.150 | DO NOT SCALE | SHEET 1OF1 | DRAWING NO: 8713 | REV: E

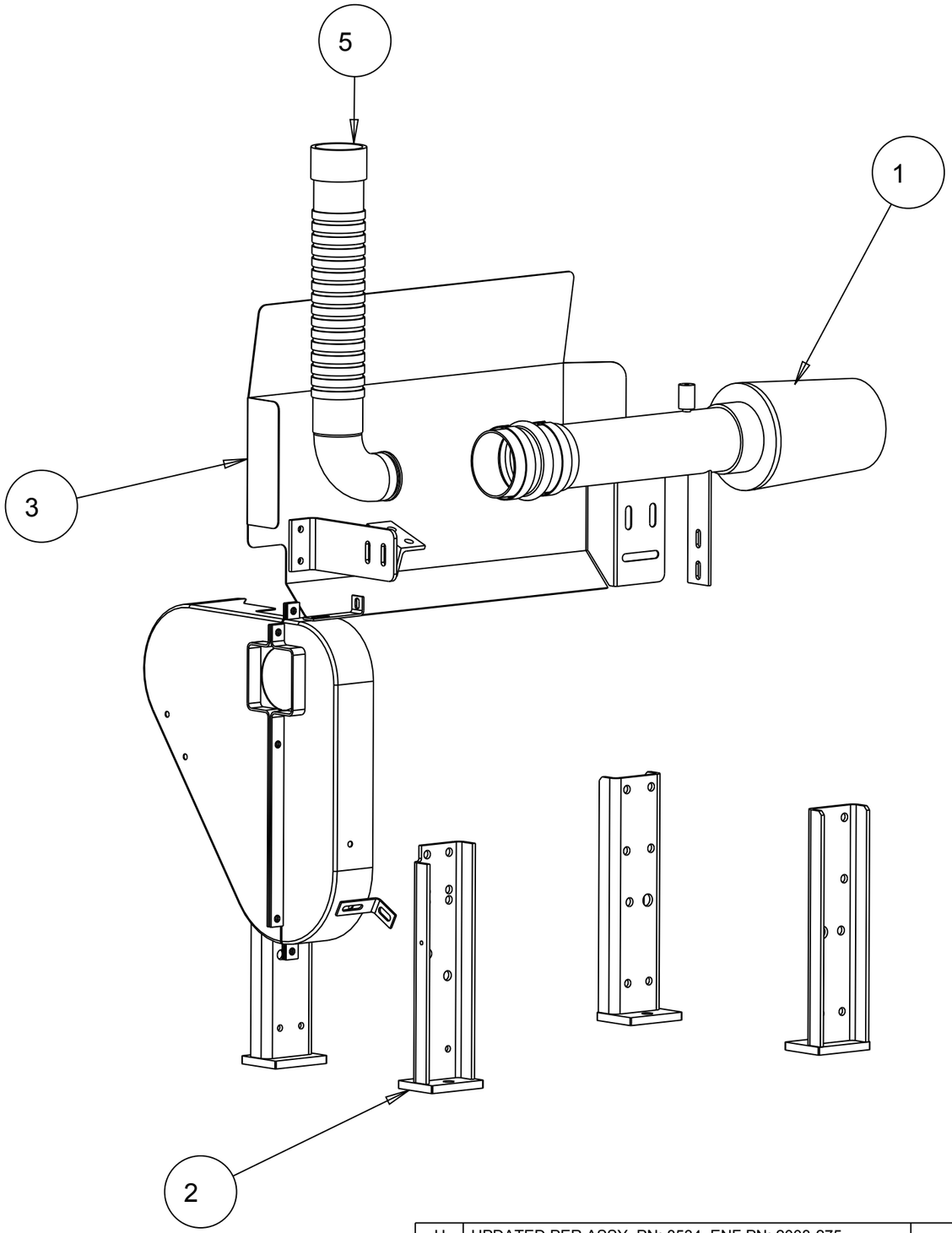

BILL OF MATERIAL

ITEM	QTY	DESCRIPTION	PART NUMBER
1	1	ASSEMBLY, AIR CLEANER, CFP59, FIRE PUMP	8534
2	1	ASSEMBLY, MOUNTING, ENGINE, FIREPUMP, 6B	8579
3	1	ASSEMBLY, EXHAUST SHIELD, B SERIES, FIREPUMP	8694
4	1	GUARD, FIRE PUMP CFP5.9	11532
5	1	FLEX, EXHAUST, 3" FLANGE, FIREPUMP	8550

REV	DESCRIPTION OF REVISION	REV BY	DATE
H	UPDATED PER ASSY. PN: 8534 ENF PN: 2008-275	MAC	10-14-2008
G	REV PER AIR CLEANER	DAVE N	27NOV06
F	REV PER TURBO GUARD	DAVE N	28MAR05

This document contains confidential and trade secret information, is the property of Cummins NPower, LLC and is given to the receiver in confidence. The receiver, by receiving and retaining of the document accepts the document in confidence and agrees that, except as authorized in writing by Cummins NPower, it will (1) not use the document or any copy thereof or the confidential or trade secret information therein, (2) not copy the document, (3) not disclose to others either the document or the confidential or trade secret information therein, and (4) upon completion of the need to retain the document, or upon demand, return the document, all copies thereof, and all material copied therefrom. COPYRIGHT Cummins NPower, LLC

UNLESS OTHERWISE SPECIFIED ALL DIMENSION TOLERANCES ARE

ANGULAR DIMENSIONS ±°

THIRD ANGLE PROJECTION

	IMPERIAL UNITS	METRIC UNITS
MACHINE TOLERANCES	.XX ± ± 0.010 .XXX ± ± 0.005	X. ± ± 0.4 .XX ± ± 0.2
FORM TOLERANCES	.XX ± ± 0.030 .XXX ± ± 0.015	X. ± ± 0.8 .XX ± ± 0.4
FAB TOLERANCES	.XX ± ± 0.060 .XXX ± ± 0.030	X. ± ± 1.5 .XX ± ± 0.8

REF. SCALES

Cummins NPower

CUMMINS NPOWER, LLC
CORPORATE OFFICE
1600 BUERKLE ROAD
WHITE BEAR LAKE, MN
WWW.NPOWER.CUMMINS.COM

NPOWER SYSTEMS
DESIGN CENTER
875 LAWRENCE DRIVE
DEPERE, WISCONSIN

TITLE 1: ASSEMBLY, POWER MODULE, COMMON
TITLE 2: FIREPUMP, NFP-659

DWG UNITS: IN/LB/S	DRAWN BY: S. DANFORTH			DATE: 21MAR2004	
	APPD BY:			DATE:	
EST WEIGHT: 81.738	SCALE: 0.125	DO NOT SCALE	SHEET 1OF1	DRAWING NO: 8533	REV: H

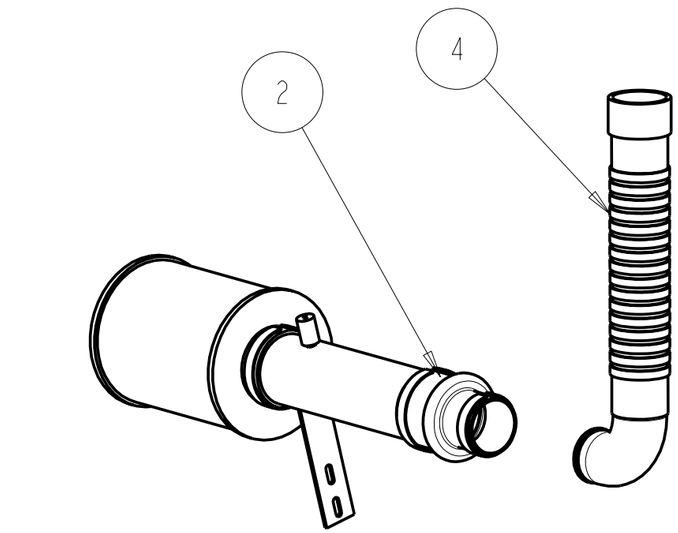

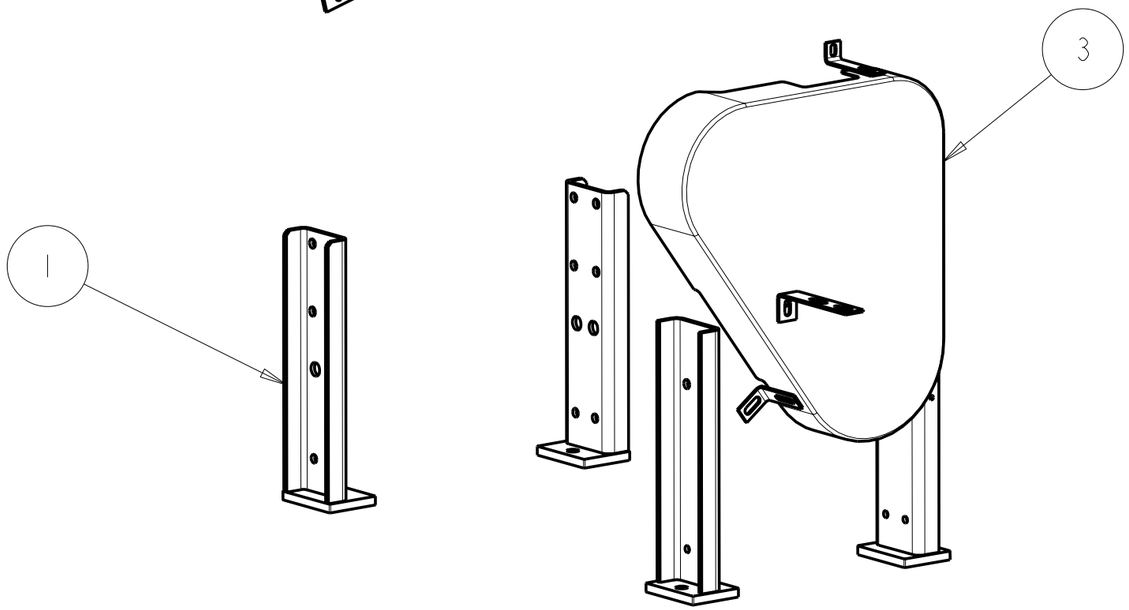

BILL OF MATERIAL

ITEM	QTY	DESCRIPTION	PART NUMBER
1	1	ASSEMBLY, MOUNTING, ENGINE, FIREPUMP, 6B	8579
2	1	ASSEMBLY, AIR CLEANER, CFP59-F55, FIRE PUMP, 6B WET TURBO	9565
3	1	ASSEMBLY, PULLEY GUARD, 6B WET TURBO, FIREPUMP, CFP59-F55	9780
4	1	FLEX, EXHAUST, 3" MALE NPT, FIREPUMP	8550

REV	DESCRIPTION OF REVISION	REV BY	DATE
D	REV PER GUARD	DAVE N	23JUN05
C	REV PER AIR FILTER. ADDED GUARD	DAVE N	19JAN05

ALL RIGHTS TO MANUFACTURE, COPY OR DISPOSE OF THIS DRAWING OR ITS CONTENTS ARE RESERVED UNLESS OTHERWISE SPECIFIED IN WRITING BY CUMMINS NPOWER, LLC

UNLESS OTHERWISE SPECIFIED
ALL DIMENSION TOLERANCES ARE

ANGULAR DIMENSIONS ± 1°

IMPERIAL UNITS

MACHINE TOLERANCES
.X = ± 0.06
.XX = ± 0.010
.XXX = ± 0.001

WELD TOLERANCES
.X = ± 0.25
.XX = ± 0.12
.XXX = ± 0.06

METRIC UNITS

MACHINE TOLERANCES
X = ± 1.5
X.X = ± 0.5
X.XX = ± 0.05

WELDED TOLERANCES
X = ± 5
X.X = ± 3
X.XX = ± 1.50

CUMMINS NPOWER, LLC
CORPORATE OFFICE
1600 BUERKLE ROAD
WHITE BEAR LAKE, MN
WWW.NPOWER.CUMMINS.COM

NPOWER SYSTEMS
DESIGN CENTER
875 LAWRENCE DRIVE
DEPERE, WISCONSIN

TITLE 1: ASSEMBLY, POWER MODULE, 6B MARINE ENGINE
TITLE 2: FIREPUMP, CFP59F55

DWG UNITS:	DRAWN BY: DAVE N		DATE: 10AUG2004
IN/LB/S	APPD BY:		DATE:
EST WEIGHT: 75.637	SCALE: 0.125	DO NOT SCALE	SHEET 1OF1	DRAWING NO: 9562	REV: D

BILL OF MATERIAL

ITEM	QTY	DESCRIPTION	PART NUMBER
1	2	CLAMP, 4" NOMINAL, AC400	8815
2	1	AIR FILTER, 4" DIA. INLET, CFP59,6E,83,9E FIREPUMP	9606
3	1	TUBE, AIR CLEANER EXTENSION, FIREPUMP	9576
4	1	COUPLING, RUBBER, 4", NELSON #89835K	89835K
5	1	RESTRICTION INDIACOR, 1/8" NPT	RAX00-2352

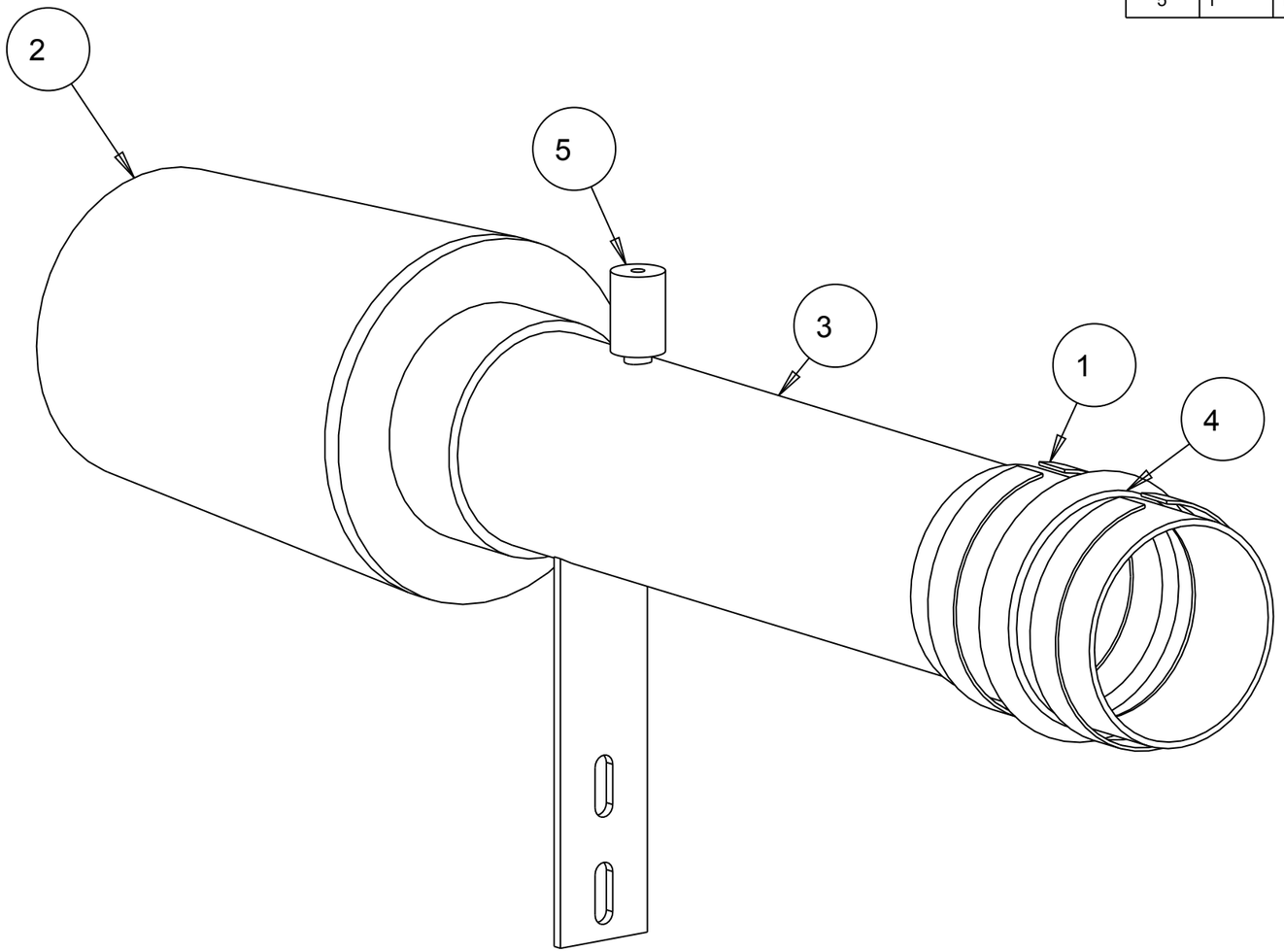

REF. SCALES

This document contains confidential and trade secret information, is the property of Cummins NPower, LLC and is given to the receiver in confidence. The receiver, by receiving and retaining of the document accepts the document in confidence and agrees that, except as authorized in writing by Cummins NPower, it will (1) not use the document or any copy thereof or the confidential or trade secret information therein, (2) not copy the document, (3) not disclose to others either the document or the confidential or trade secret information therein, and (4) upon completion of the need to retain the document, or upon demand, return the document, all copies thereof, and all material copied therefrom. COPYRIGHT Cummins NPower, LLC

UNLESS OTHERWISE SPECIFIED ALL DIMENSION TOLERANCES ARE

REV	DESCRIPTION OF REVISION	REV BY	DATE
E	OMIT PN:8535 ENF PN: 2008-275	MAC	10-14-2008
D	REV PER AIR CLEANER	DAVE N	16OCT06
C	ADDED RESTRICTION INDICATOR	DAVE N	21DEC04

ANGULAR DIMENSIONS ±± °

THIRD ANGLE PROJECTION

IMPERIAL UNITS	METRIC UNITS
MACHINE TOLERANCES .XX ± ± 0.010 .XXX ± ± 0.005	MACHINE TOLERANCES .X ± ± 0.4 .XX ± ± 0.2
FORM TOLERANCES .XX ± ± 0.030 .XXX ± ± 0.015	FORM TOLERANCES .X ± ± 0.8 .XX ± ± 0.4
FAB TOLERANCES .XX ± ± 0.060 .XXX ± ± 0.030	FAB TOLERANCES .X ± ± 1.5 .XX ± ± 0.8

CUMMINS NPOWER, LLC
CORPORATE OFFICE
1600 BUERKLE ROAD
WHITE BEAR LAKE, MN
WWW.NPOWER.CUMMINS.COM

NPOWER SYSTEMS
DESIGN CENTER
875 LAWRENCE DRIVE
DEPERE, WISCONSIN

TITLE 1: ASSEMBLY, AIR CLEANER, CFP59
TITLE 2: FIRE PUMP

DWG UNITS: IN/LB/S	DRAWN BY: DAVE N		DATE: 24MAR2004		
	APPD BY:		DATE:		
EST WEIGHT: 15.799	SCALE: 0.375	DO NOT SCALE	SHEET 1OF1	DRAWING NO: 8534	REV: E

BILL OF MATERIAL

ITEM	QTY	DESCRIPTION	PART NUMBER
1	1	OPTIONAL AIR CLEANER, 4" NOM, B105006	8535
2	1	CLAMP, 4" NOMINAL, AC400	8815
3	1	CLAMP, 3" NOMINAL, AC300	8816
4	1	AIR FILTER, 4" DIA. INLET, CFP59,6E,83,9E FIREPUMP	9606
5	1	TUBE, AIR CLEANER EXTENSION, FIREPUMP	9576
6	1	HOSE, HUMP, REDUCER, 4" X 3", NELSON #89844K	89844K
7	1	RESTRICTION INDIACOR, 1/8" NPT	RAX00-2352

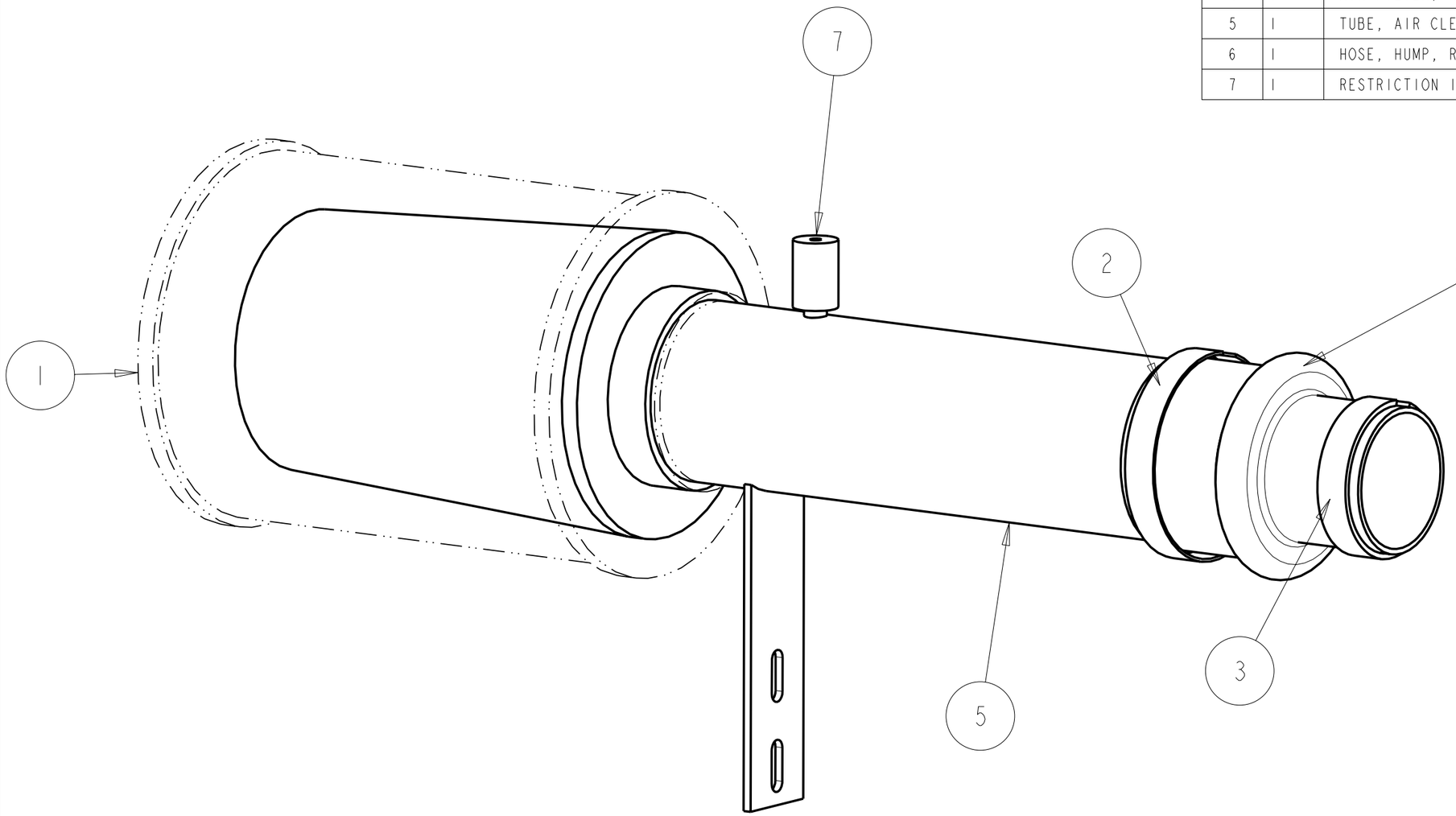

REV	DESCRIPTION OF REVISION	REV BY	DATE
C	REV PER AIR CLEANER	DAVE N	15DEC06
B	REV PER HUMP HOSE	DAVE N	19JAN05

This document contains confidential and trade secret information, is the property of Cummins NPower, LLC and is given to the receiver in confidence. The receiver, by receiving and retaining of the document accepts the document in confidence and agrees that, except as authorized in writing by Cummins NPower, it will (1) not use the document or any copy thereof or the confidential or trade secret information therein, (2) not copy the document, (3) not disclose to others either the document or the confidential or trade secret information therein, and (4) upon completion of the need to retain the document, or upon demand, return the document, all copies thereof, and all material copied therefrom. COPYRIGHT Cummins NPower, LLC

UNLESS OTHERWISE SPECIFIED ALL DIMENSION TOLERANCES ARE

ANGULAR DIMENSIONS ± 1° | IMPERIAL UNITS | METRIC UNITS

THIRD ANGLE PROJECTION

IMPERIAL UNITS	METRIC UNITS
MACHINE TOLERANCES .XX = ± 0.010 .XXX = ± 0.005	MACHINE TOLERANCES .X = ± 0.4 .XX = ± 0.2
FORM TOLERANCES .XX = ± 0.030 .XXX = ± 0.015	FORM TOLERANCES .X = ± 0.8 .XX = ± 0.4
FAB TOLERANCES .XX = ± 0.060 .XXX = ± 0.030	FAB TOLERANCES .X = ± 1.5 .XX = ± 0.8

REF. SCALES

CUMMINS NPOWER, LLC
CORPORATE OFFICE
1600 BUERKLE ROAD
WHITE BEAR LAKE, MN
WWW.NPOWER.CUMMINS.COM

NPOWER SYSTEMS
DESIGN CENTER
875 LAWRENCE DRIVE
DEPERE, WISCONSIN

TITLE 1: ASSEMBLY, AIR CLEANER, CFP59-F55
TITLE 2: FIRE PUMP, 6B WET TURBO

DWG UNITS: IN/LB/S	DRAWN BY: DAVE N				DATE: 24MAR2004
	APPD BY:				DATE:
EST WEIGHT: 14.856	SCALE: 0.375	DO NOT SCALE	SHEET 1OF1	DRAWING NO: 9565	REV: C

BILL OF MATERIAL			
ITEM	QTY	DESCRIPTION	PART NUMBER
1	1	SHEET, 20 GA. HRS	14798_01
2	1	TUBING, HRS, 4.25" OD X 4.010 I.D.	14798_02
3	1	PLATE, HRS, 0.125"	14798_03

SEE SHEET 2 OF 2 FOR PART DETAILS

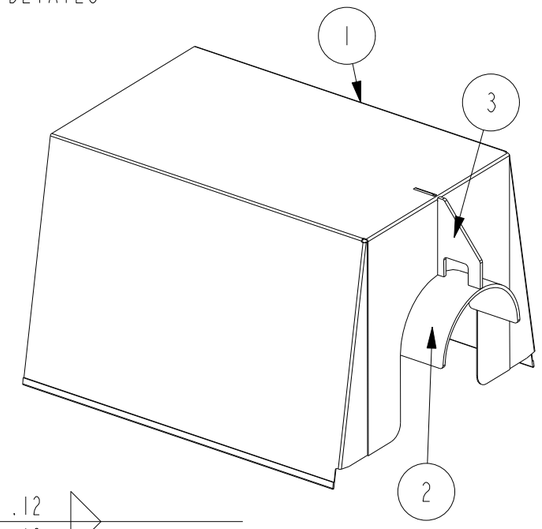

SCALE 0.200

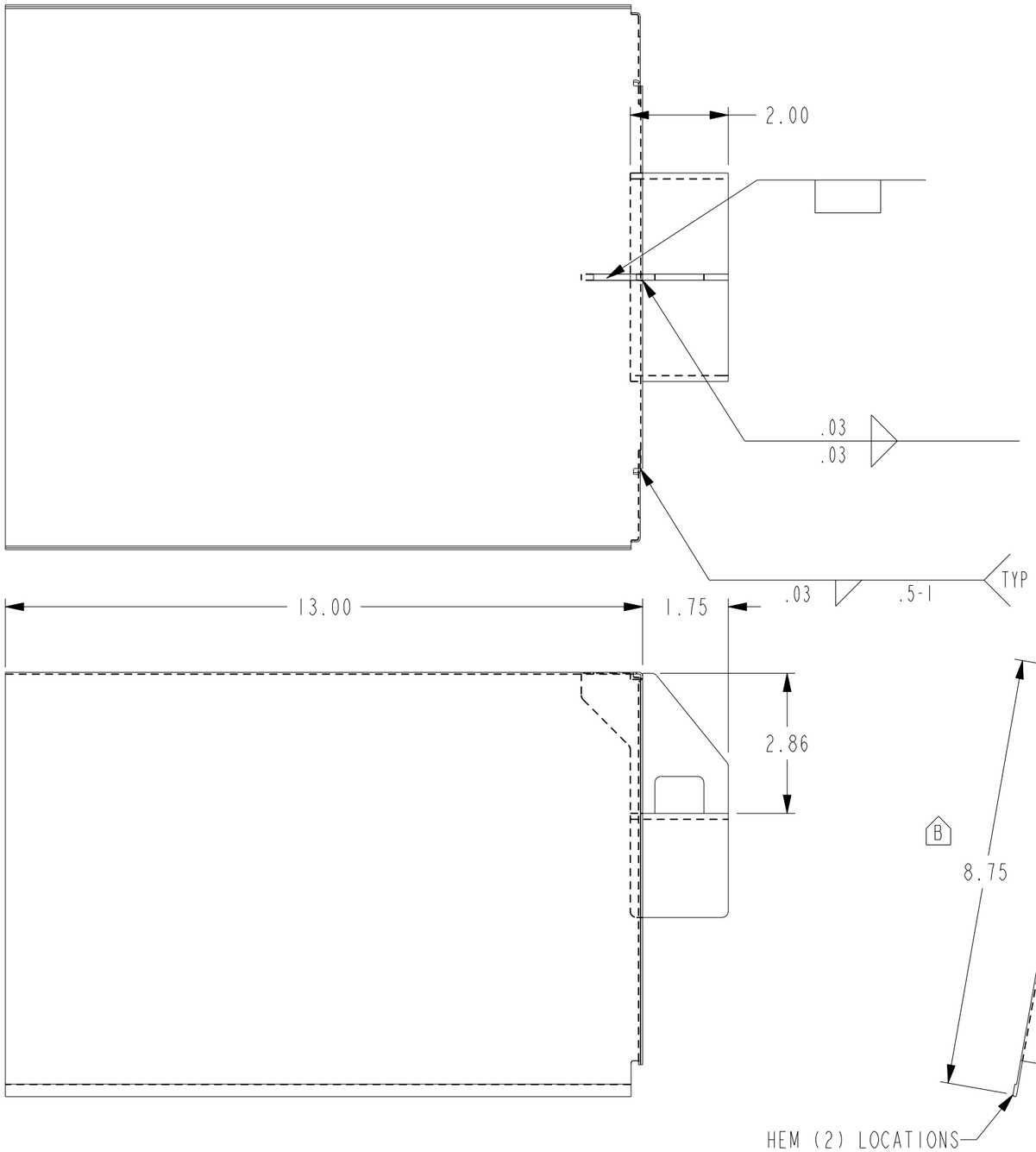

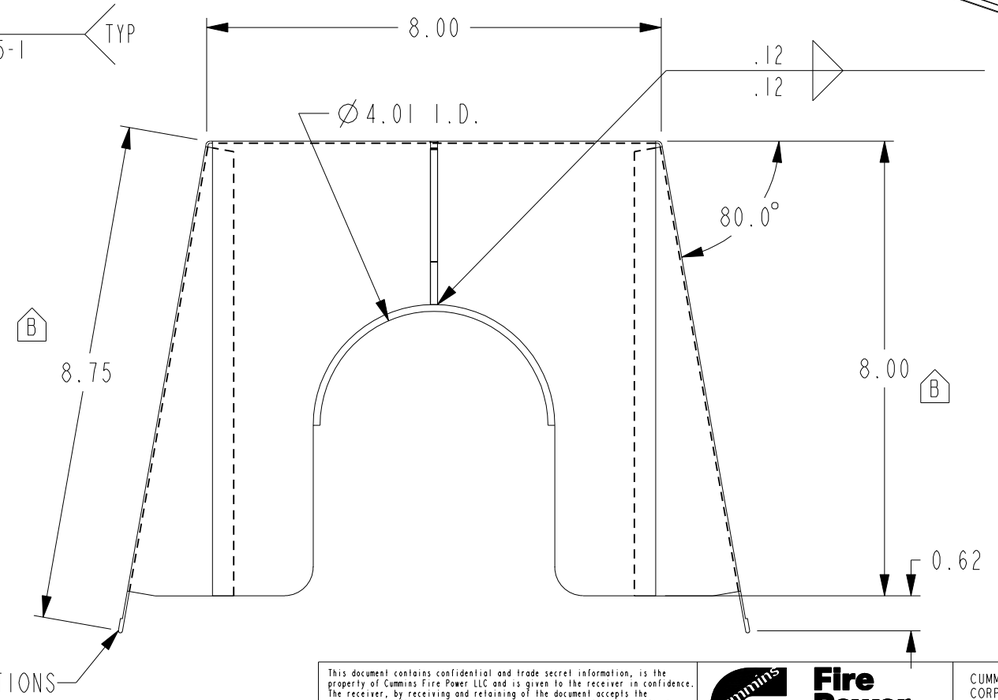

NOTES:
1) MATERIAL: NOTED
2) ALL BENDS AT MINIMUM BEND RADIUS
3) REMOVE ALL BURS AND SHARP EDGES
4) FINISH CASE RED

REV	ENF	DESCRIPTION OF REVISION	REV BY	DATE
B	2009-250	8.75 WAS 6.75. 8.00 WAS 5.00	DAN	01-JUN-09
A	2009-245	PAGE 2 - 0.75 WAS 0.50	DAN	27-MAY-09

This document contains confidential and trade secret information, is the property of Cummins Fire Power LLC and is given to the receiver in confidence. The receiver, by receiving and retaining of the document accepts the document in confidence and agrees that, except as authorized in writing by Cummins NPower, it will (1) not use the document or any copy thereof or the confidential or trade secret information therein, (2) not copy the document, (3) not disclose to others either the document or the confidential or trade secret information therein, and (4) upon completion of the need to retain the document, or upon demand, return the document, all copies thereof, and all material copied therefrom. COPYRIGHT Cummins Fire Power LLC

UNLESS OTHERWISE SPECIFIED ALL DIMENSION TOLERANCES ARE

ANGULAR DIMENSIONS ± 1°	IMPERIAL UNITS	METRIC UNITS
THIRD ANGLE PROJECTION	MACHINE TOLERANCES .XX = ± 0.010 .XXX = ± 0.005 FORM TOLERANCES .XX = ± 0.030 .XXX = ± 0.015 FAB TOLERANCES .XX = ± 0.060 .XXX = ± 0.030	MACHINE TOLERANCES .X = ± 0.4 .XX = ± 0.2 FORM TOLERANCES .X = ± 0.8 .XX = ± 0.4 FAB TOLERANCES .X = ± 1.5 .XX = ± 0.8

Cummins Fire Power

CUMMINS FIRE POWER LLC
CORPORATE OFFICE
1600 BUERKLE ROAD
WHITE BEAR LAKE, MN
WWW.CUMMINSFIREPOWER.COM

CUSTOM DESIGN
AND UPFIT CENTER
875 LAWRENCE DRIVE
DEPERE, WISCONSIN

COVER, AIR CLEANER, FITS 4" O.D. TUBING

DWG UNITS: IN/LB/S	DRAWN BY: DAVE N	DATE: 03APR2009
	PRO-ENGINEER	REF DRWG: -
SCALE: 0.375	SHEET 1 OF 2	DRAWING NO: 14798
EST WEIGHT: 3.181		

BILL OF MATERIAL

ITEM	QTY	DESCRIPTION	PART NUMBER
1	2	LEG, ENGINE SUPPORT, REAR, FIREPUMP, 6B/4B	8412
2	2	LEG, SUPPORT, ENGINE, FRONT, UNIVERSAL, FIREPUMP, 6B/6C	10576

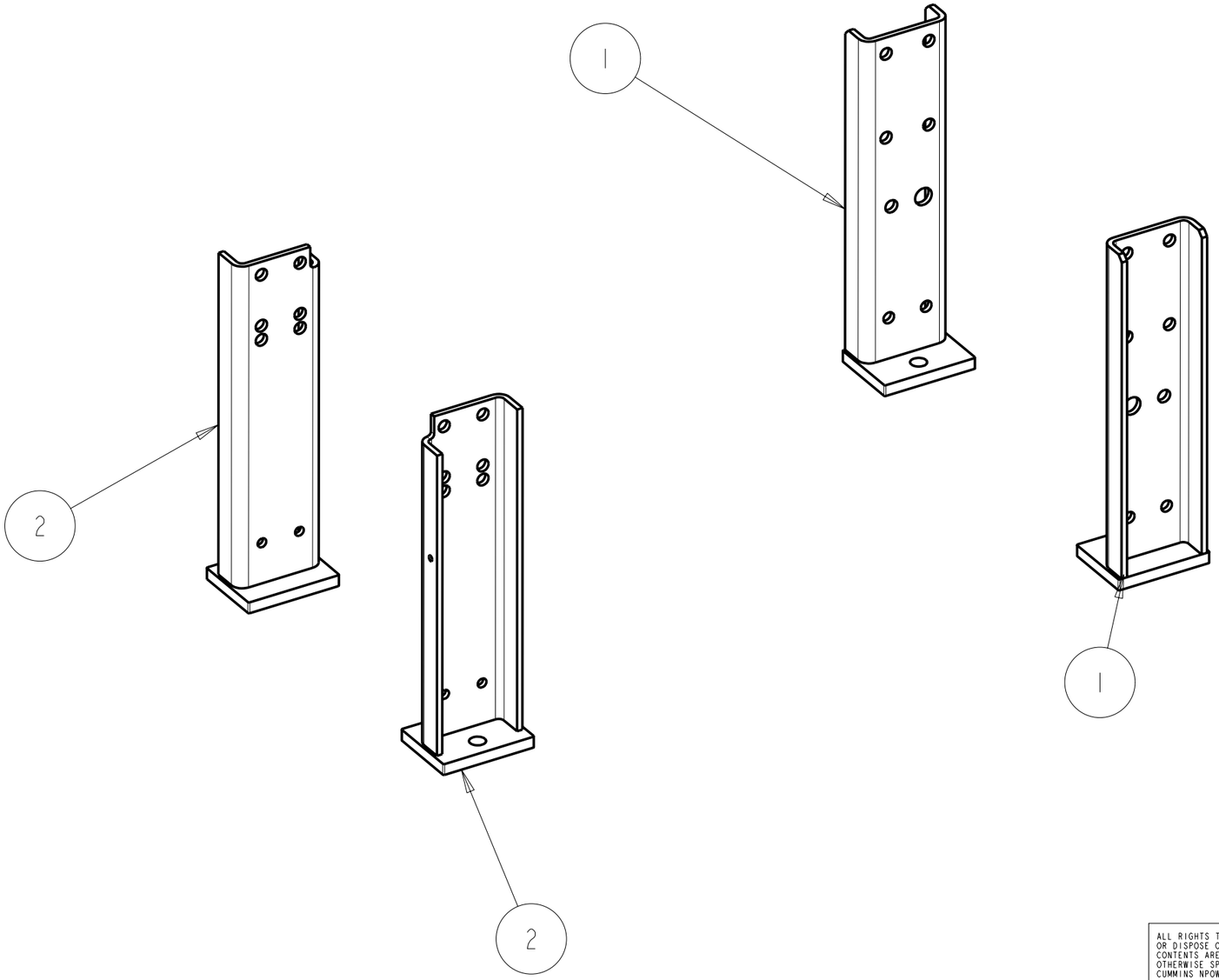

REV	DESCRIPTION OF REVISION	REV BY	DATE
D	(2) 10576 WAS (1) 8413 & (1) 8414	DAVE N	23NOV05
C	REV PER SUB CONPONENTS	DAVE N	18OCT04

ALL RIGHTS TO MANUFACTURE, COPY OR DISPOSE OF THIS DRAWING OR ITS CONTENTS ARE RESERVED UNLESS OTHERWISE SPECIFIED IN WRITING BY CUMMINS NPOWER, LLC

CUMMINS NPOWER, LLC
CORPORATE OFFICE
1600 BUERKLE ROAD
WHITE BEAR LAKE, MN
WWW.NPOWER.CUMMINS.COM

NPOWER SYSTEMS
DESIGN CENTER
875 LAWRENCE DRIVE
DEPERE, WISCONSIN

UNLESS OTHERWISE SPECIFIED
ALL DIMENSION TOLERANCES ARE
ANGULAR DIMENSIONS ± 1°

IMPERIAL UNITS

MACHINE TOLERANCES
.X = ± 0.06
.XX = ± 0.010
.XXX = ± 0.001

WELD TOLERANCES
.X = ± 0.25
.XX = ± 0.12
.XXX = ± 0.06

METRIC UNITS

MACHINE TOLERANCES
X. = ± 1.5
X.X = ± 0.5
X.XX = ± 0.05

WELDED TOLERANCES
X. = ± 5
X.X = ± 3
X.XX = ± 1.50

TITLE 1: ASSEMBLY, MOUNTING, ENGINE
TITLE 2: FIREPUMP, 6B

DWG UNITS:	DRAWN BY: S. DANFORTH		DATE: 21MAR2004		
IN/LB/S	APPD BY:		DATE:		
EST WEIGHT: 32.834	SCALE: 0.200	DO NOT SCALE	SHEET 1OF1	DRAWING NO: 8579	REV: D

BILL OF MATERIAL

ITEM	QTY	DESCRIPTION	PART NUMBER
1	1	CHANNEL, SUPPORT, ENGINE, REAR, FIREPUMP, 6B/4B	8408
2	1	PLATE, LEG, ENGINE SUPPORT, FIREPUMP	8409

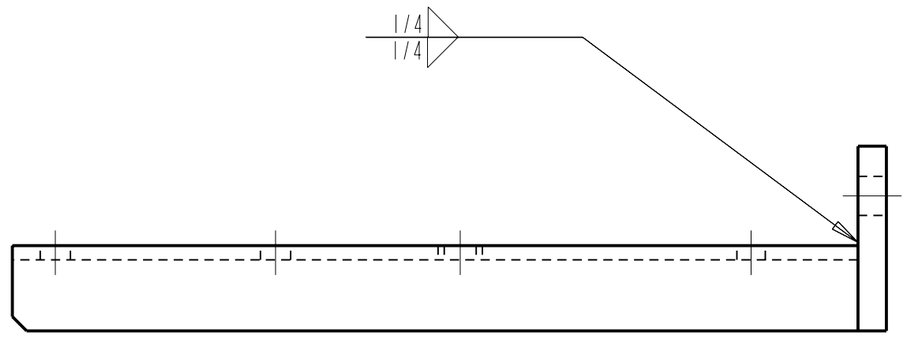

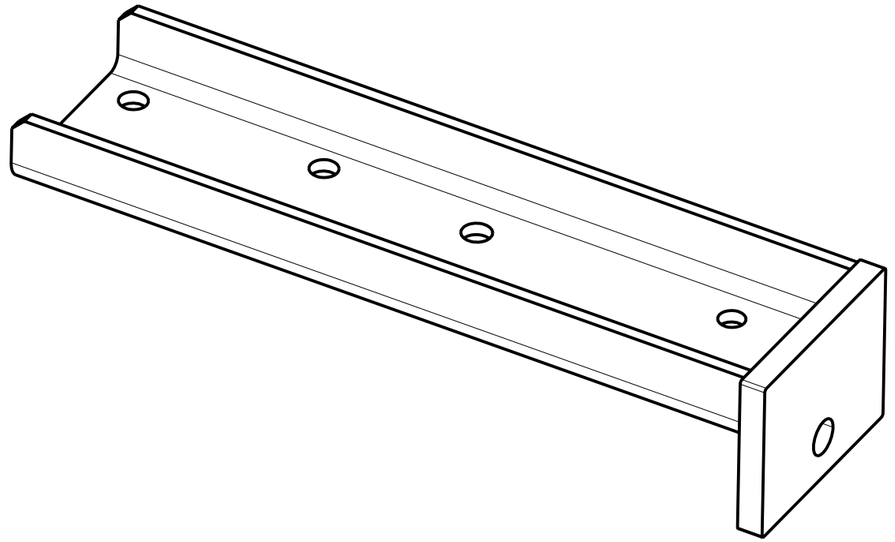

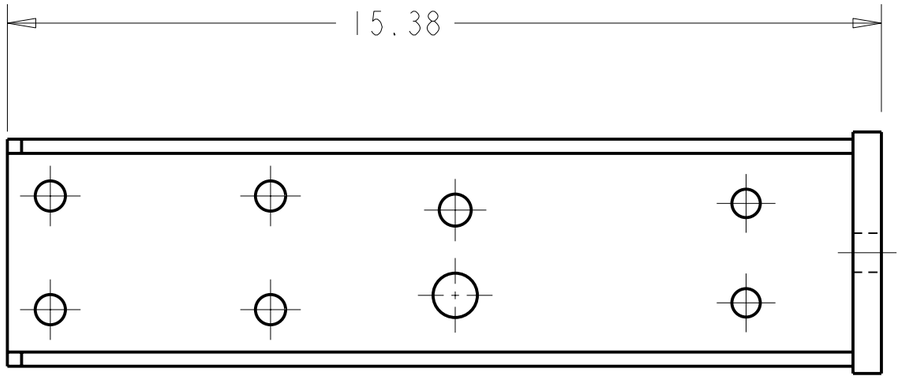

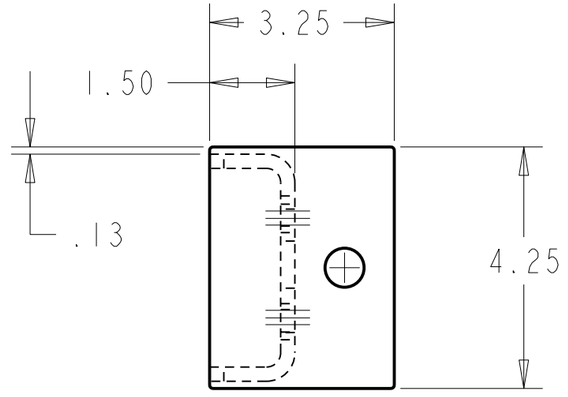

NOTES:
1) REMOVE ALL BURS AND SHARP EDGES
2) PRIME AND PAINT FIRE ENGINE RED
3) CENTER CHANNEL ON PLATE

REV	DESCRIPTION OF REVISION	REV BY	DATE
E	ADDED WELD SYMBOL	DWW	16 MAY 08
D	REV PER ITEM #1	DAVE N	22 NOV 05
C	REV PER MTG PAD	DAVE N	20 OCT 04

This document contains confidential and trade secret information, is the property of Cummins NPower, LLC and is given to the receiver in confidence. The receiver, by receiving and retaining of the document accepts the document in confidence and agrees that, except as authorized in writing by Cummins NPower, it will (1) not use the document or any copy thereof or the confidential or trade secret information therein, (2) not copy the document, (3) not disclose to others either the document or the confidential or trade secret information therein, and (4) upon completion of the need to retain the document, or upon demand, return the document, all copies thereof, and all material copied therefrom. COPYRIGHT Cummins NPower, LLC

UNLESS OTHERWISE SPECIFIED ALL DIMENSION TOLERANCES ARE

ANGULAR DIMENSIONS ± 1° | IMPERIAL UNITS | METRIC UNITS

THIRD ANGLE PROJECTION

MACHINE TOLERANCES
.XX = ± 0.010
.XXX = ± 0.005
FORM TOLERANCES
.XX = ± 0.030
.XXX = ± 0.015
FAB TOLERANCES
.XX = ± 0.060
.XXX = ± 0.030

MACHINE TOLERANCES
.X = ± 0.4
.XX = ± 0.2
FORM TOLERANCES
.X = ± 0.8
.XX = ± 0.4
FAB TOLERANCES
.X = ± 1.5
.XX = ± 0.8

REF. SCALES

CUMMINS NPOWER, LLC
CORPORATE OFFICE
1600 BUERKLE ROAD
WHITE BEAR LAKE, MN
WWW.NPOWER.CUMMINS.COM

NPOWER SYSTEMS
DESIGN CENTER
875 LAWRENCE DRIVE
DEPERE, WISCONSIN

TITLE 1: LEG, ENGINE SUPPORT, REAR
TITLE 2: FIREPUMP, 6B/4B

DWG UNITS: 08FEB2004	DRAWN BY: DAVE N				DATE: 08FEB2004
	APPD BY:				DATE:
EST WEIGHT: 8.256	SCALE: 0.375	DO NOT SCALE	SHEET 1OF1	DRAWING NO: 8412	REV: E

BILL OF MATERIAL

ITEM	QTY	DESCRIPTION	PART NUMBER
1	1	PLATE, LEG, ENGINE SUPPORT, FIREPUMP	8409
2	1	CHANNEL, SUPPORT, ENGINE, FRONT, UNIVERSAL, FIREPUMP, 6B/6C	10577

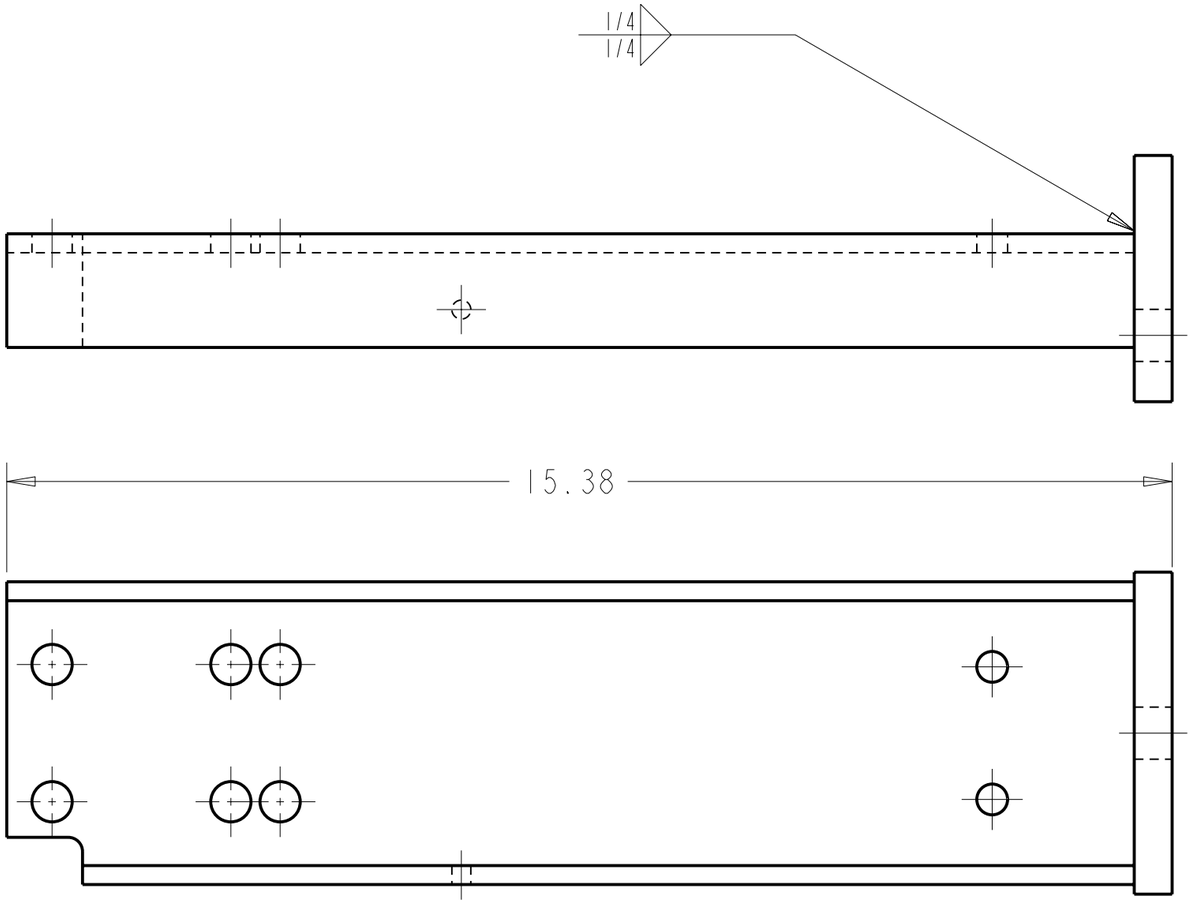

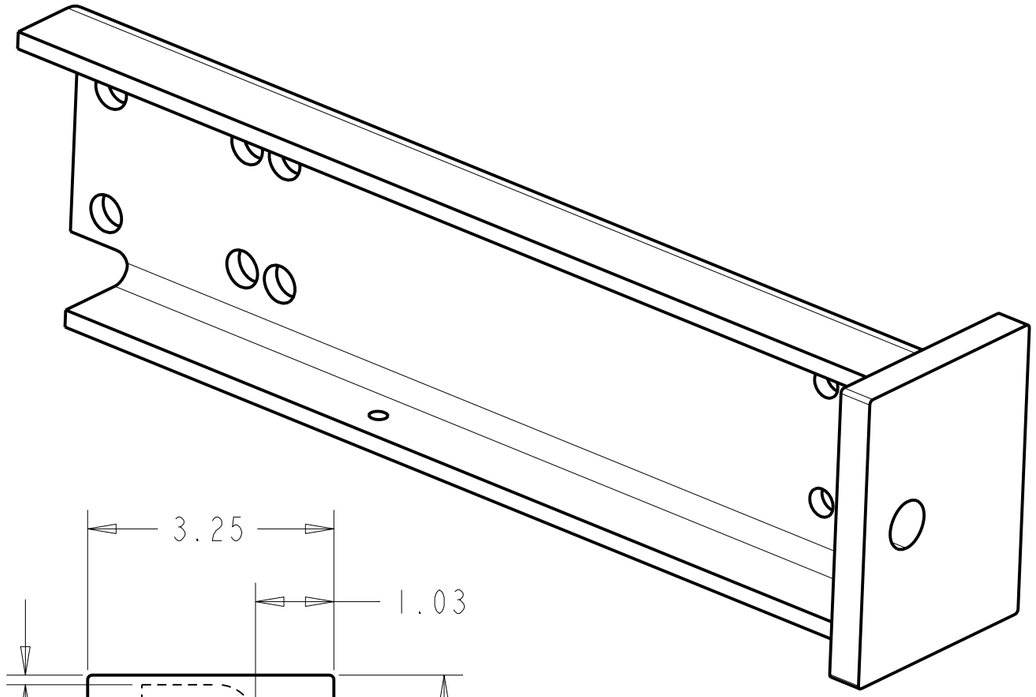

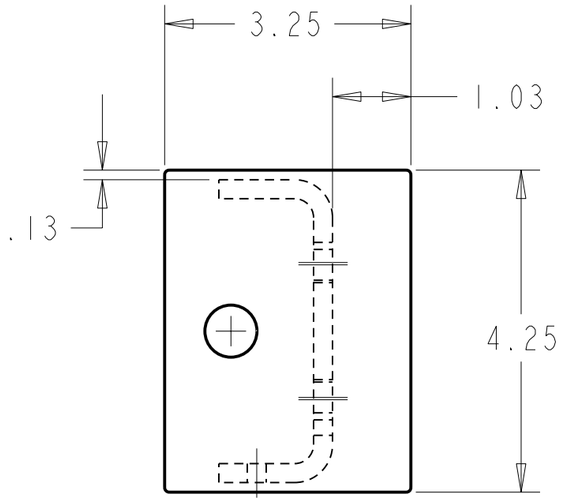

NOTES:
1) REMOVE ALL BURS AND SHARP EDGES
2) PRIME AND PAINT CASE RED
3) CENTER CHANNEL ON PLATE
4) REPLACES 8413 & 8414

REV	DESCRIPTION OF REVISION	REV BY	DATE
A	ADDED WELD SYMBOL	DWW	16 MAY 08

This document contains confidential and trade secret information, is the property of Cummins NPower, LLC and is given to the receiver in confidence. The receiver, by receiving and retaining of the document accepts the document in confidence and agrees that, except as authorized in writing by Cummins NPower, it will (1) not use the document or any copy thereof or the confidential or trade secret information therein, (2) not copy the document, (3) not disclose to others either the document or the confidential or trade secret information therein, and (4) upon completion of the need to retain the document, or upon demand, return the document, all copies thereof, and all material copied therefrom. COPYRIGHT Cummins NPower, LLC

UNLESS OTHERWISE SPECIFIED ALL DIMENSION TOLERANCES ARE

ANGULAR DIMENSIONS ± 1°	IMPERIAL UNITS	METRIC UNITS
THIRD ANGLE PROJECTION	MACHINE TOLERANCES .XX : ± 0.010 .XXX : ± 0.005 FORM TOLERANCES .XX : ± 0.030 .XXX : ± 0.015 FAB TOLERANCES .XX : ± 0.060 .XXX : ± 0.030	MACHINE TOLERANCES .X : ± 0.4 .XX : ± 0.2 FORM TOLERANCES .X : ± 0.8 .XX : ± 0.4 FAB TOLERANCES .X : ± 1.5 .XX : ± 0.8

REF. SCALES

CUMMINS NPOWER, LLC
CORPORATE OFFICE
1600 BUERKLE ROAD
WHITE BEAR LAKE, MN
WWW.NPOWER.CUMMINS.COM

NPOWER SYSTEMS
DESIGN CENTER
875 LAWRENCE DRIVE
DEPERE, WISCONSIN

TITLE 1: LEG, SUPPORT, ENGINE, FRONT, UNIVERSAL
TITLE 2: FIREPUMP, 6B/6C

DWG UNITS: IN/LB/S	DRAWN BY: DAVE N		DATE: 29NOV2005		
	APPD BY:		DATE:		
EST WEIGHT: 8.166	SCALE: 0.500	DO NOT SCALE	SHEET 1OF1	DRAWING NO: 10576	REV: A

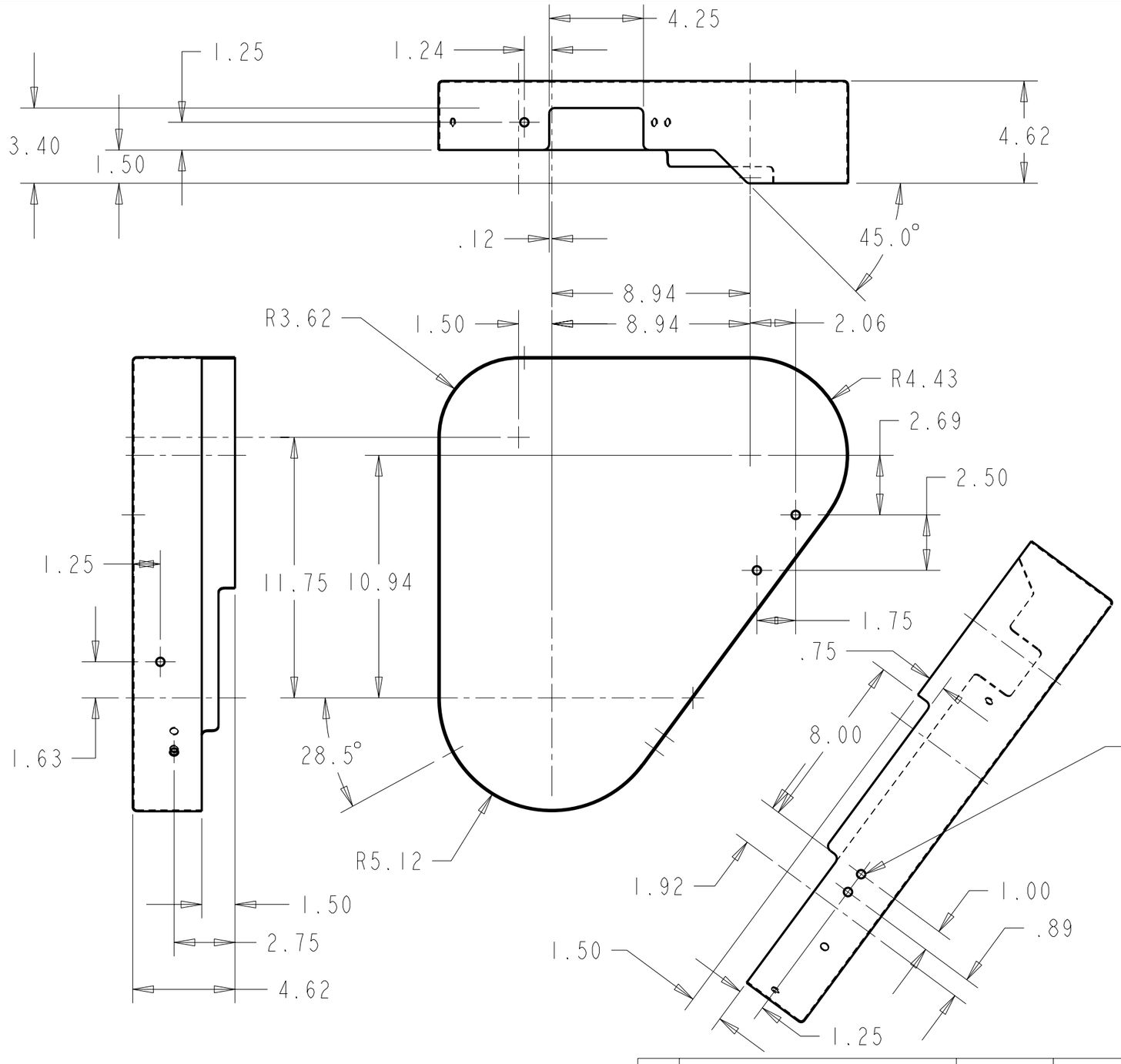

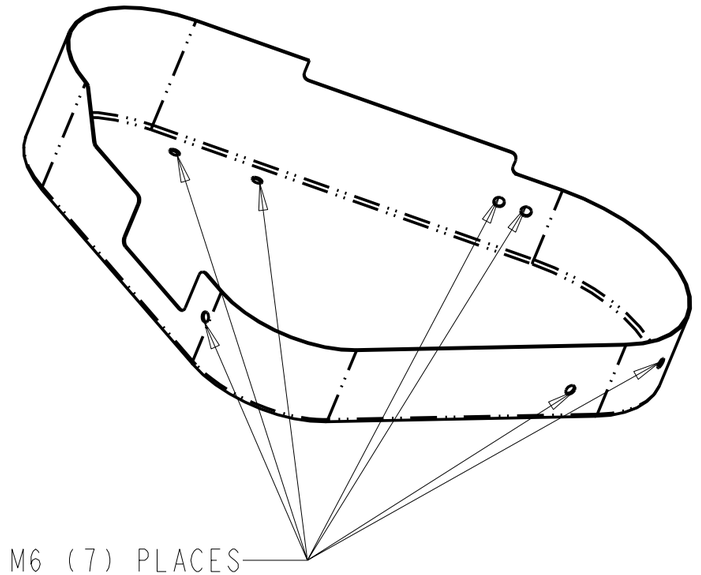

NOTES:
1) MATERIAL: 16 GA. HRS
2) ALL BENDS AT MINIMUM BEND RADIUS
3) REMOVE ALL BURS AND SHARP EDGES
4) PRIME AND PAINT FIRE ENGINE RED

REV	DESCRIPTION OF REVISION	REV BY	DATE
E	REV PER CUT-OUTS	DAVE N	15AUG05
D2	ADDED DIMS	DAVE N	08AUG05

ALL RIGHTS TO MANUFACTURE, COPY OR DISPOSE OF THIS DRAWING OR ITS CONTENTS ARE RESERVED UNLESS OTHERWISE SPECIFIED IN WRITING BY CUMMINS NPOWER, LLC

UNLESS OTHERWISE SPECIFIED ALL DIMENSION TOLERANCES ARE

ANGULAR DIMENSIONS ± 1°

IMPERIAL UNITS	METRIC UNITS
MACHINE TOLERANCES .X : ± 0.06 .XX : ± 0.010 .XXX : ± 0.001	MACHINE TOLERANCES X : ± 1.5 X.X : ± 0.5 X.XX : ± 0.05
WELD TOLERANCES .X : ± 0.25 .XX : ± 0.12 .XXX : ± 0.06	WELDED TOLERANCES X : ± 5 X.X : ± 3 X.XX : ± 1.50

CUMMINS NPOWER, LLC
CORPORATE OFFICE
1600 BUERKLE ROAD
WHITE BEAR LAKE, MN
WWW.NPOWER.CUMMINS.COM

NPOWER SYSTEMS
DESIGN CENTER
875 LAWRENCE DRIVE
DEPERE, WISCONSIN

TITLE 1: GUARD, PULLEY, 6B/4B
TITLE 2: FIRE PUMP

DWG UNITS:	DRAWN BY: DAVE N	DATE: 01JAN2004
MM	APPD BY:	DATE:

EST WEIGHT:	SCALE:	DO NOT SCALE	SHEET	DRAWING NO:	REV:
7.755	0.200		1OF1	8591	E

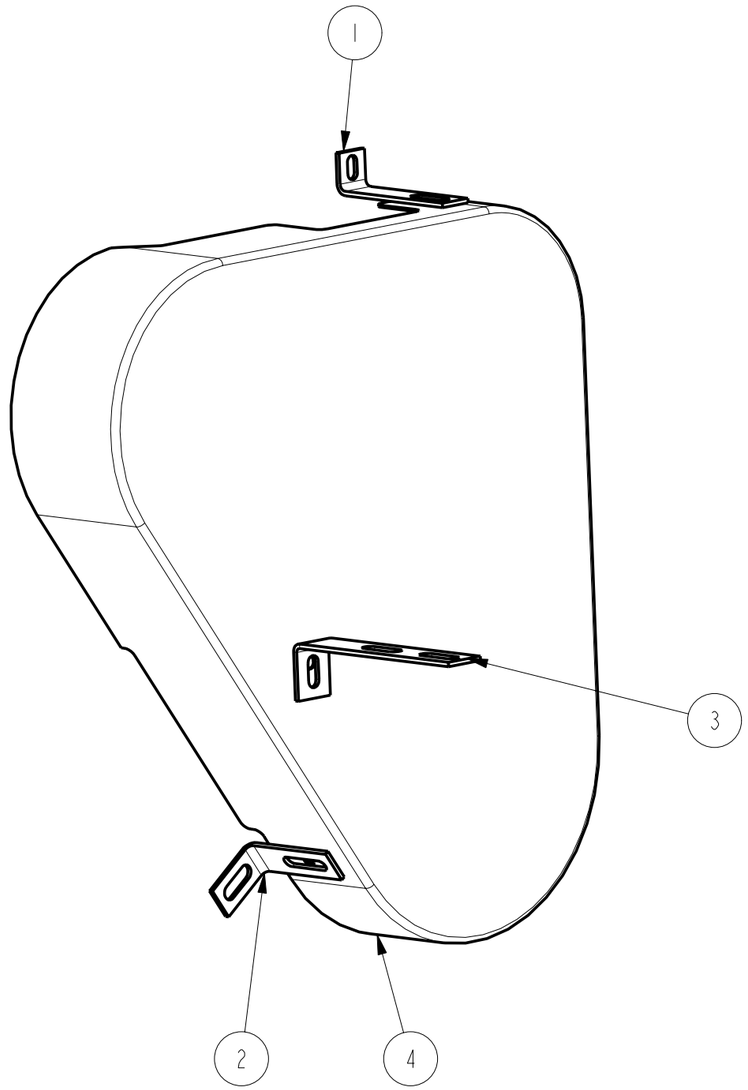

BILL OF MATERIAL

ITEM	QTY	DESCRIPTION	PART NUMBER
1	1	BRACKET, MOUNTING, GUARD, FIREPUMP	8592
2	2	BRACKET, MOUNTING, GUARD, FIREPUMP	8593
3	1	BRACKET, MOUNTING, TUBE SUPPORT, FIREPUMP	8657
4	1	GUARD, PULLEY, 6B WET TURBO, FIRE PUMP	9781

REV	DESCRIPTION OF REVISION	REV BY	DATE
A	ADDED BRACKET	DAVE N	28JUN05

ALL RIGHTS TO MANUFACTURE, COPY OR DISPOSE OF THIS DRAWING OR ITS CONTENTS ARE RESERVED UNLESS OTHERWISE SPECIFIED IN WRITING BY CUMMINS NPOWER, LLC

UNLESS OTHERWISE SPECIFIED
ALL DIMENSION TOLERANCES ARE
ANGULAR DIMENSIONS ± 1°

IMPERIAL UNITS

MACHINE TOLERANCES
.X : ± 0.06
.XX : ± 0.010
.XXX : ± 0.001

WELD TOLERANCES
.X : ± 0.25
.XX : ± 0.12
.XXX : ± 0.06

METRIC UNITS

MACHINE TOLERANCES
X : ± 1.5
X.X : ± 0.5
X.XX : ± 0.05

WELDED TOLERANCES
X : ± 5
X.X : ± 3
X.XX : ± 1.50

CUMMINS NPOWER, LLC
CORPORATE OFFICE
1600 BUERKLE ROAD
WHITE BEAR LAKE, MN
WWW.NPOWER.CUMMINS.COM

NPOWER SYSTEMS
DESIGN CENTER
875 LAWRENCE DRIVE
DEPERE, WISCONSIN

TITLE 1: ASSEMBLY, PULLEY GUARD, 6B WET TURBO
TITLE 2: FIREPUMP, CFP59-F55

DWG UNITS: IN/LB/S	DRAWN BY: DAVE N		DATE: 23JUN2005			
	APPD BY: -		DATE: -			
EST WEIGHT: 42238.628	SCALE: 0.250	DO NOT SCALE	SHEET 1OF1	DRAWING NO: 9780	REV: A	

BILL OF MATERIAL

ITEM	QTY	DESCRIPTION	PART NUMBER
1	1	BRACKET, STAND-OFF, EXHAUST SHIELD, FIREPUMP	8549
2	1	HEAT SHIEL, TURBO, C8.3, FIREPUMP	9581
3	1	BRACKET, MOUNTING, TURBO GUARD, FIREPUMP	9582

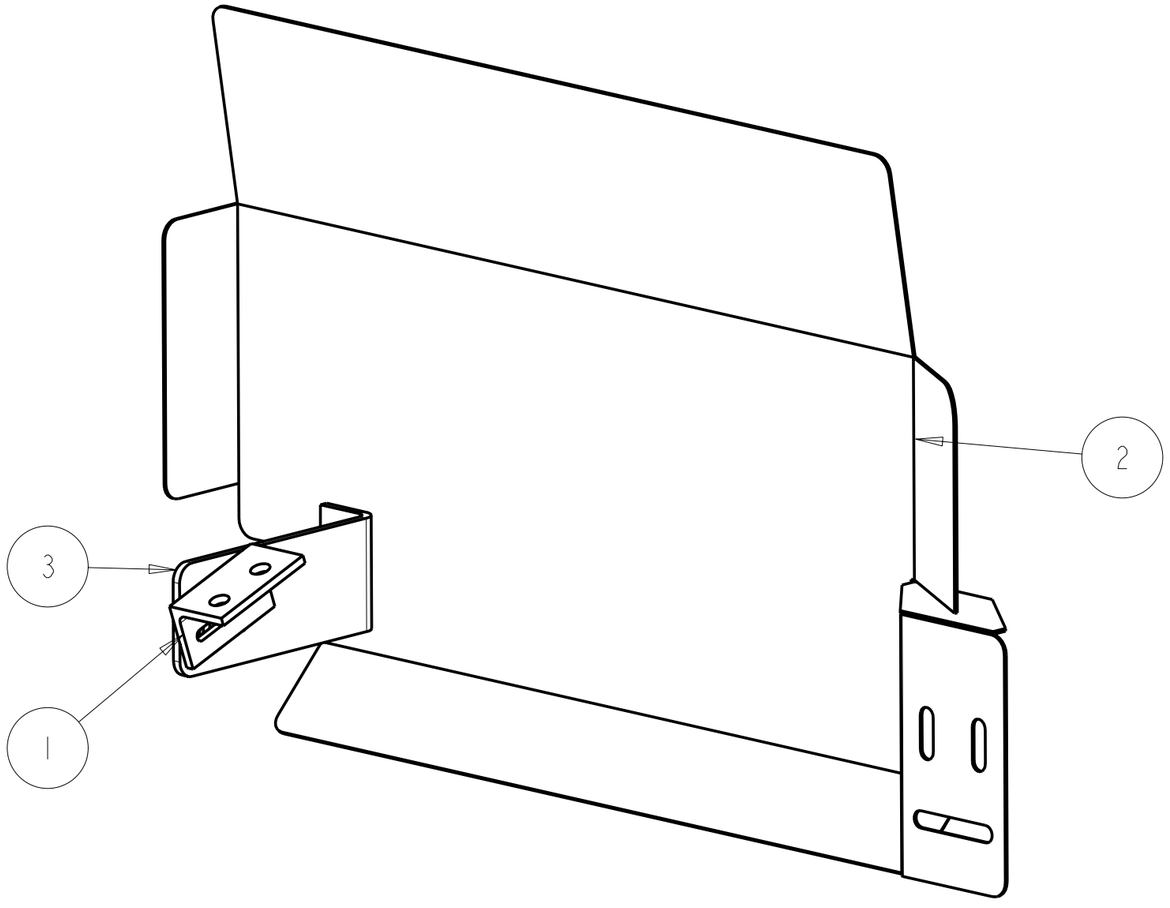

REV	DESCRIPTION OF REVISION	REV BY	DATE
A1	GRAPHICS UPDATE	DAVE N	17MAR05
A	REV PER PANEL BRKT	DAVE N	02SEP04

ALL RIGHTS TO MANUFACTURE, COPY OR DISPOSE OF THIS DRAWING OR ITS CONTENTS ARE RESERVED UNLESS OTHERWISE SPECIFIED IN WRITING BY CUMMINS NPOWER, LLC

UNLESS OTHERWISE SPECIFIED
ALL DIMENSION TOLERANCES ARE

ANGULAR DIMENSIONS ± 1°

IMPERIAL UNITS	METRIC UNITS
MACHINE TOLERANCES .X : ± 0.06 .XX : ± 0.010 .XXX : ± 0.001 ... WELD TOLERANCES .X : ± 0.25 .XX : ± 0.12 .XXX : ± 0.06	MACHINE TOLERANCES X : ± 1.5 X.X : ± 0.5 X.XX : ± 0.05 ... WELDED TOLERANCES X : ± 5 X.X : ± 3 X.XX : ± 1.50

CUMMINS NPOWER, LLC
CORPORATE OFFICE
1600 BUERKLE ROAD
WHITE BEAR LAKE, MN
WWW.NPOWER.CUMMINS.COM

NPOWER SYSTEMS
DESIGN CENTER
875 LAWRENCE DRIVE
DEPERE, WISCONSIN

TITLE 1: ASSEMBLY, EXHAUST SHIELD, B SERIES
TITLE 2: FIREPUMP

DWG UNITS: IN/LB/S	DRAWN BY: DAVE N				DATE: 17MAY2004
	APPD BY:				DATE:
EST WEIGHT: 42238.628	SCALE: 0.250	DO NOT SCALE	SHEET 1OF1	DRAWING NO: 8694	REV: A

ITEM	QTY	DESCRIPTION	MATERIAL
01	A/R	3" MALE NPT	
02	A/R	3" I.D. CUFF	
03	A/R	3" (7" OD) 125# ANSI FLANGE	
04	A/R	4" (9" OD) 125# ANSI FLANGE	
05	A/R	5" (10" OD) 125# ANSI FLANGE	
06	A/R	6" (11" OD) 125# ANSI FLANGE	

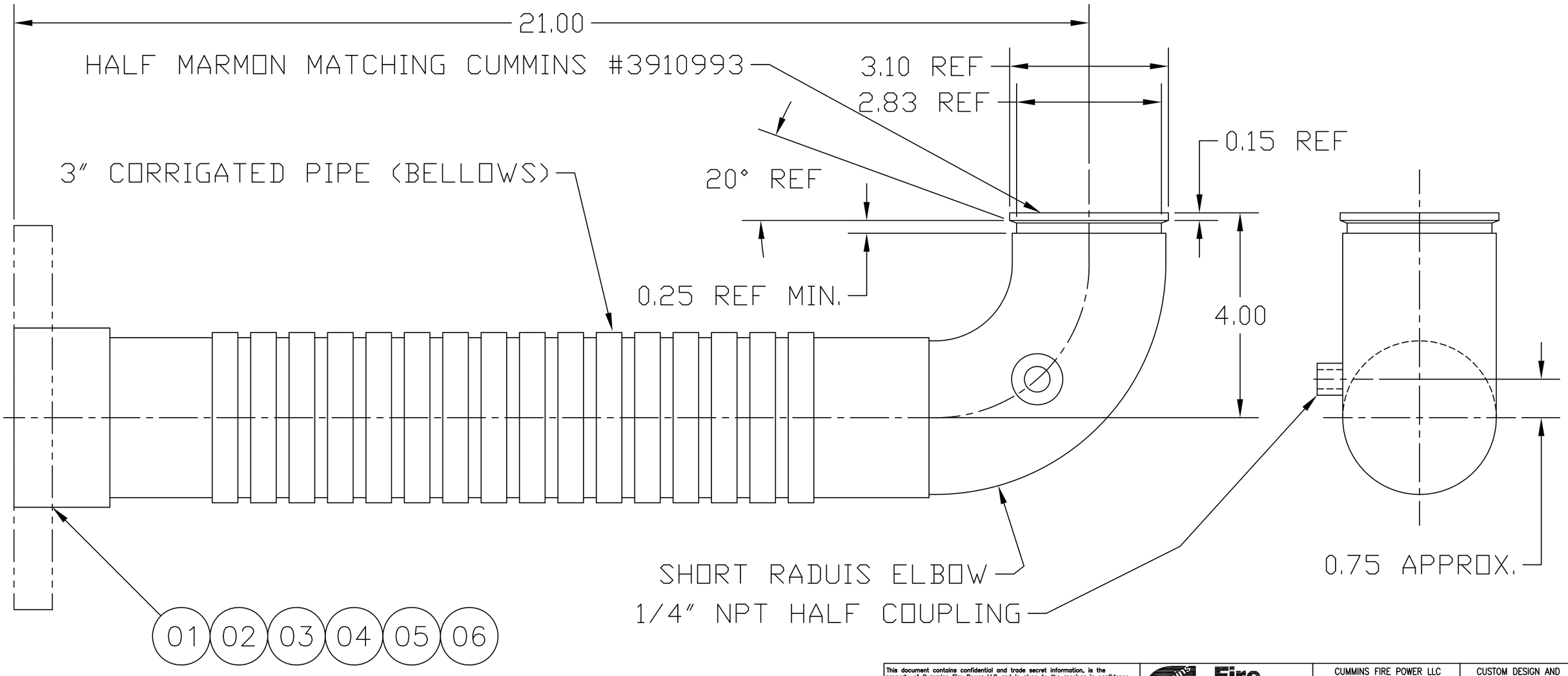

This document contains confidential and trade secret information, is the property of Cummins Fire Power LLC and is given to the receiver in confidence. The receiver, by receiving and retaining of the document accepts the document in confidence and agrees that, except as authorized in writing by Cummins Fire Power, it will (1) not use the document or any copy thereof or the confidential or trade secret information therein, (2) not copy the document, (3) not disclose to others either the document or the confidential or trade secret information therein, and (4) upon completion of the need to retain the document, or upon demand, return the document, all copies thereof, and all material copied therefrom. COPYRIGHT Cummins Fire Power LLC

UNLESS OTHERWISE SPECIFIED ALL DIMENSION TOLERANCES ARE

ANGULAR DIMENSIONS ± 1°	IMPERIAL UNITS	METRIC UNITS
THIRD ANGLE PROJECTION	MACHINE TOLERANCES .XX = ± 0.010 .XXX = ± 0.005 FORM TOLERANCES .XX = ± 0.030 .XXX = ± 0.015 FAB TOLERANCES .XX = ± 0.060 .XXX = ± 0.030	MACHINE TOLERANCES .X = ± 0.4 .XX = ± 0.2 FORM TOLERANCES .X = ± 0.8 .XX = ± 0.4 FAB TOLERANCES .X = ± 1.5 .XX = ± 0.8

Cummins Fire Power

CUMMINS FIRE POWER LLC
CORPORATE OFFICE
1600 BUERKLE ROAD
WHITE BEAR LAKE, MN
WWW.CUMMINSFIREPOWER.COM

CUSTOM DESIGN AND
UPFIT CENTER
875 LAWRENCE DRIVE
DEPERE, WISCONSIN

EXHAUST, 90°, HALF MARMON TABULATED 3" TURBO OUTLET

DWG UNITS: INCH/LB/S	DRAWN BY: DAVE N	DATE: 09MAR2004
	AUTO CAD	REF DRWG:
SCALE: 1/2	SHEET 10F1	DRAWING NO: 8550
EST WEIGHT:		

REV				
D	2009-050	ADDED -04 & -05 & -06	DAN	11-NOV-09
REV	ENF	DESCRIPTION OF REVISION	BY	DATE

BILL OF MATERIAL			
ITEM	QTY	DESCRIPTION	PART NUMBER
1	1	HOSE, 3/4" ID, 80242GL X 16" LG	8557
2	1	HOSE, 3/4" ID 70242 GL X 12" LG	8558
3	1	CIRCULATION HEATER, P&T #3315032, 1500W , 120V , 176° F	9598
4	4	ISOLATOR, STUD MOUNT, 1/4-20, TECH PRODUCTS #51201	13102
D 5	1	BRACKET, MTG, COOLANT HEATER, ISOLATED	14388
6	1	EXTENSION, 1/2" NPT	85454
7	4	CLAMP, ADJ, 1.00" NOM, .812 - 1.500	92216
8	1	BUSHING, 1/2" x 3/4" NPT	LTL-SRB3412
9	2	ADAPTER, 1/2" NPT X 3/4" 90 DEG BARB	R-269HB-12-8

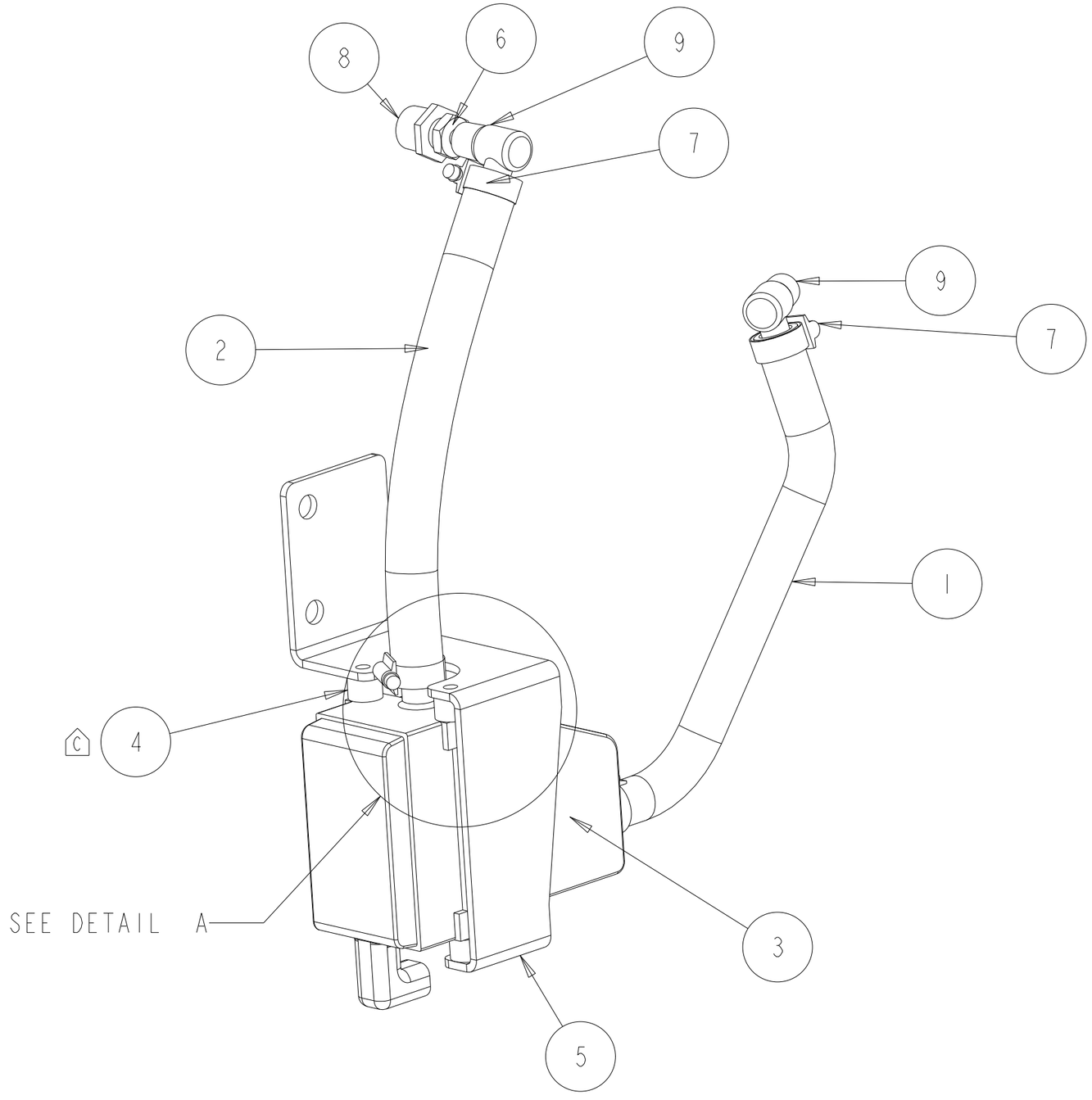

DETAIL A
SCALE 0.750

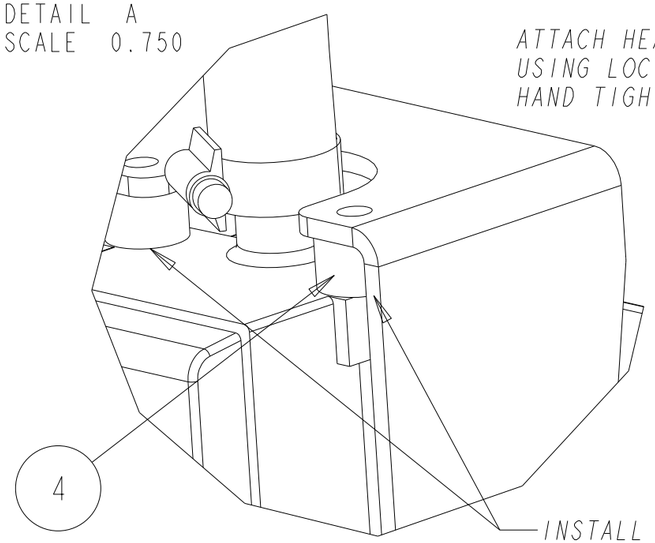

ATTACH HEATER TO BRACKET USING LOCTITE #425 BLUE, HAND TIGHT + 1/4 TURN.

INSTALL ISOLATORS (2) ON HEATER WITH LOCTITE #425 BLUE, HAND TIGHT.

REV	ENF	DESCRIPTION OF REVISION	REV BY	DATE
D	2009-152	REV PER BRKT	DAVE N	07APR2009
C		ADD ISOLATORS	S DUBICK	16JUL08

This document contains confidential and trade secret information, is the property of Cummins Fire Power LLC and is given to the receiver in confidence. The receiver, by receiving and retaining of the document accepts the document in confidence and agrees that, except as authorized in writing by Cummins NPower, it will (1) not use the document or any copy thereof or the confidential or trade secret information therein, (2) not copy the document, (3) not disclose to others either the document or the confidential or trade secret information therein, and (4) upon completion of the need to retain the document, or upon demand, return the document, all copies thereof, and all material copied therefrom. COPYRIGHT Cummins Fire Power LLC

UNLESS OTHERWISE SPECIFIED ALL DIMENSION TOLERANCES ARE

ANGULAR DIMENSIONS ± 1°

THIRD ANGLE PROJECTION

IMPERIAL UNITS	METRIC UNITS
MACHINE TOLERANCES .XX : ± 0.010 .XXX : ± 0.005	MACHINE TOLERANCES .X : ± 0.4 .XX : ± 0.2
FORM TOLERANCES .XX : ± 0.030 .XXX : ± 0.015	FORM TOLERANCES .X : ± 0.8 .XX : ± 0.4
FAB TOLERANCES .XX : ± 0.060 .XXX : ± 0.030	FAB TOLERANCES .X : ± 1.5 .XX : ± 0.8

Cummins Fire Power

CUMMINS FIRE POWER LLC
CORPORATE OFFICE
1600 BUERKLE ROAD
WHITE BEAR LAKE, MN
WWW.CUMMINSFIREPOWER.COM

CUSTOM DESIGN
AND UPFIT CENTER
875 LAWRENCE DRIVE
DEPERE, WISCONSIN

ASSEMBLY, COOLANT HEATING, 6B

DWG UNITS: IN/LB/S	DRAWN BY: DAVE N	DATE: 22MAR2004
	PRO-ENGINEER	REF DRWG:
SCALE: 0.375	SHEET 1 OF 1	DRAWING NO: 8556
EST WEIGHT: 5.722		

LINKAGE PART NUMBER 8585-01-06

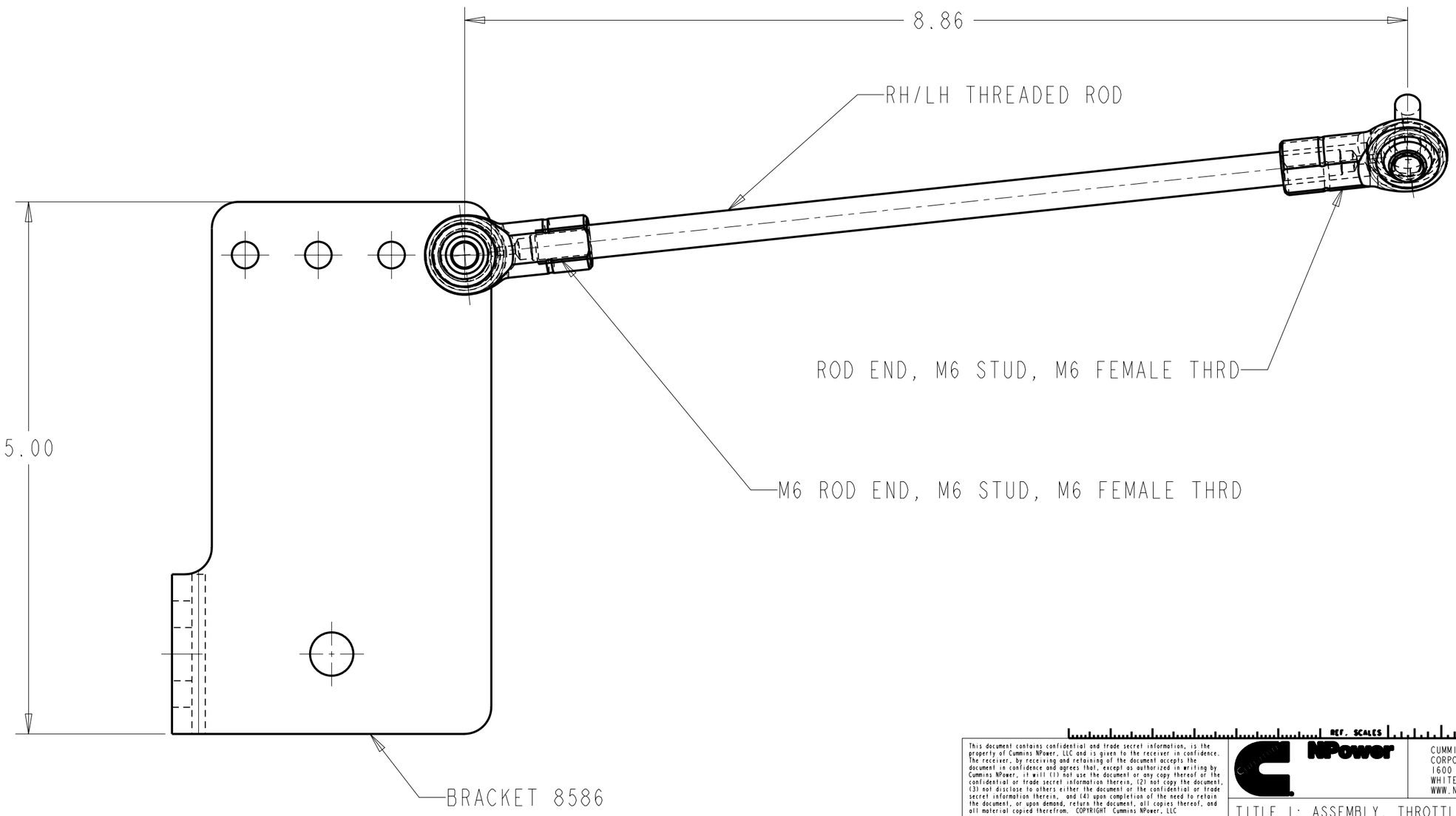

REV	DESCRIPTION OF REVISION	REV BY	DATE
A1	GRAPHICS UPDATE	DAVE N	10JUL06
A	REV PER BRACKET	DAVE N	17MAR05

This document contains confidential and trade secret information, is the property of Cummins NPower, LLC and is given to the receiver in confidence. The receiver, by receiving and retaining of the document accepts the document in confidence and agrees that, except as authorized in writing by Cummins NPower, it will (1) not use the document or any copy thereof or the confidential or trade secret information therein, (2) not copy the document, (3) not disclose to others either the document or the confidential or trade secret information therein, and (4) upon completion of the need to retain the document, or upon demand, return the document, all copies thereof, and all material copied therefrom. COPYRIGHT Cummins NPower, LLC

UNLESS OTHERWISE SPECIFIED ALL DIMENSION TOLERANCES ARE

ANGULAR DIMENSIONS ± 1° | IMPERIAL UNITS | METRIC UNITS

THIRD ANGLE PROJECTION

IMPERIAL TOLERANCES: .XX ± 0.010, .XXX ± 0.005; FORM TOLERANCES: .XX ± 0.030, .XXX ± 0.015; FAB TOLERANCES: .XX ± 0.060, .XXX ± 0.030

METRIC TOLERANCES: .X ± 0.4, .XX ± 0.2; FORM TOLERANCES: .X ± 0.8, .XX ± 0.4; FAB TOLERANCES: .X ± 1.5, .XX ± 0.8

REF. SCALES

Cummins NPower

CUMMINS NPOWER, LLC
CORPORATE OFFICE
1600 BUERKLE ROAD
WHITE BEAR LAKE, MN
WWW.NPOWER.CUMMINS.COM

NPOWER SYSTEMS
DESIGN CENTER
875 LAWRENCE DRIVE
DEPERE, WISCONSIN

TITLE 1: ASSEMBLY, THROTTLE POSITION
TITLE 2: FIREPUMP

DWG UNITS: IN/LB/S	DRAWN BY: DAVE N	DATE: 05AUG2004
	APPD BY: -	DATE: -

EST WEIGHT: 42238.628	SCALE: 1.000	DO NOT SCALE	SHEET 1OF1	DRAWING NO: 8585	REV: A

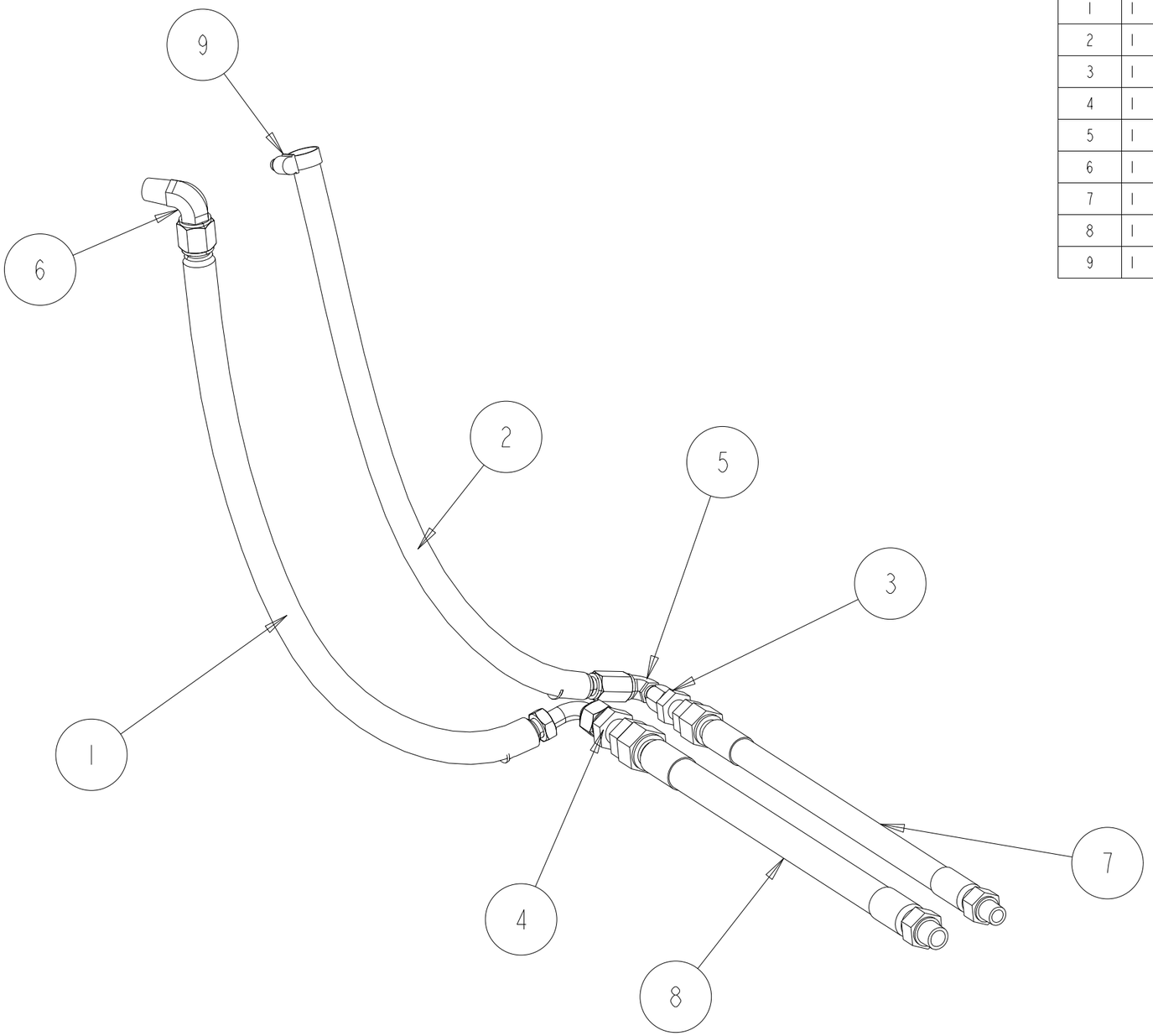

BILL OF MATERIAL

ITEM	QTY	DESCRIPTION	PART NUMBER
1	1	ASSEMBLY, HOSE, FUEL LINE, CFP59 SUPPLY	8569
2	1	ASSEMBLY, HOSE, FUEL LINE, CFP59 RETURN	8570
3	1	FTG, BLKHD, -4 JIC	12227-4
4	1	FTG, BLKHD, -6 JIC	12227-6
5	1	ELB, 90 DEG, -4 JIC X -4 FJIC	12265-4-4
6	1	ELB, 90 DEG, -6 JIC X -4 NPT	12270-6-4
7	1	FUEL LINE, 12" EXTENSION, #4 FEM JIC X #5 221FR X 1/4" NPT	14400-002
8	1	FUEL LINE, 12" EXTENSION, #6 FEM JIC X #5 221FR X 1/4" NPT	14400-004
9	1	CLAMP, WORM, .25 - .63	14992-04

REV		DESCRIPTION OF REVISION	REV BY	DATE
D	2009-313	UPDATED BULKHEADS, HOSE & FITTINGS. ADDED FLEX HOSES	DAN	16-JUL-09
REV	ENF	DESCRIPTION OF REVISION	REV BY	DATE

This document contains confidential and trade secret information, is the property of Cummins Fire Power LLC and is given to the receiver in confidence. The receiver, by receiving and retaining of the document accepts the document in confidence and agrees that, except as authorized in writing by Cummins NPower, it will (1) not use the document or any copy thereof or the confidential or trade secret information therein, (2) not copy the document, (3) not disclose to others either the document or the confidential or trade secret information therein, and (4) upon completion of the need to retain the document, or upon demand, return the document, all copies thereof, and all material copied therefrom. COPYRIGHT Cummins Fire Power LLC

UNLESS OTHERWISE SPECIFIED ALL DIMENSION TOLERANCES ARE

ANGULAR DIMENSIONS ± 1°

THIRD ANGLE PROJECTION

IMPERIAL UNITS	METRIC UNITS
MACHINE TOLERANCES .XX : ± 0.010 .XXX : ± 0.005	MACHINE TOLERANCES .X : ± 0.4 .XX : ± 0.2
FORM TOLERANCES .XX : ± 0.030 .XXX : ± 0.015	FORM TOLERANCES .X : ± 0.8 .XX : ± 0.4
FAB TOLERANCES .XX : ± 0.060 .XXX : ± 0.030	FAB TOLERANCES .X : ± 1.5 .XX : ± 0.8

Cummins Fire Power

CUMMINS FIRE POWER LLC
CORPORATE OFFICE
1600 BUERKLE ROAD
WHITE BEAR LAKE, MN
WWW.CUMMINSFIREPOWER.COM

CUSTOM DESIGN
AND UPFIT CENTER
875 LAWRENCE DRIVE
DEPERE, WISCONSIN

KIT, FUEL LINES
CFP59-F10/20/30/40/50

DWG UNITS: IN/LB/S

DRAWN BY: DAVE N

PRO-ENGINEER

DATE: 24MAR2004

REF DRWG:

SCALE: 0.375

EST WEIGHT: 323.738

SHEET 1 OF 1

DRAWING NO: 8568

BILL OF MATERIAL			
ITEM	QTY	DESCRIPTION	PART NUMBER
1	1	ASSEMBLY, HOSE, FUEL LINE, CFP59 SUPPLY	9878
2	1	ASSEMBLY, HOSE, FUEL LINE, CFP59 RETURN	9879
3	2	FTG, BLKHD, -6 JIC	12227-6
4	1	ELB, 90 DEG, -6 JIC X -8 NPT	12270-6-8
5	2	FUEL LINE, 12" EXTENSION, #6 FEM JIC X #5 221FR X 1/4" NPT	14400-004
6	1	CLAMP, WORM, .63 - .88	14990-06

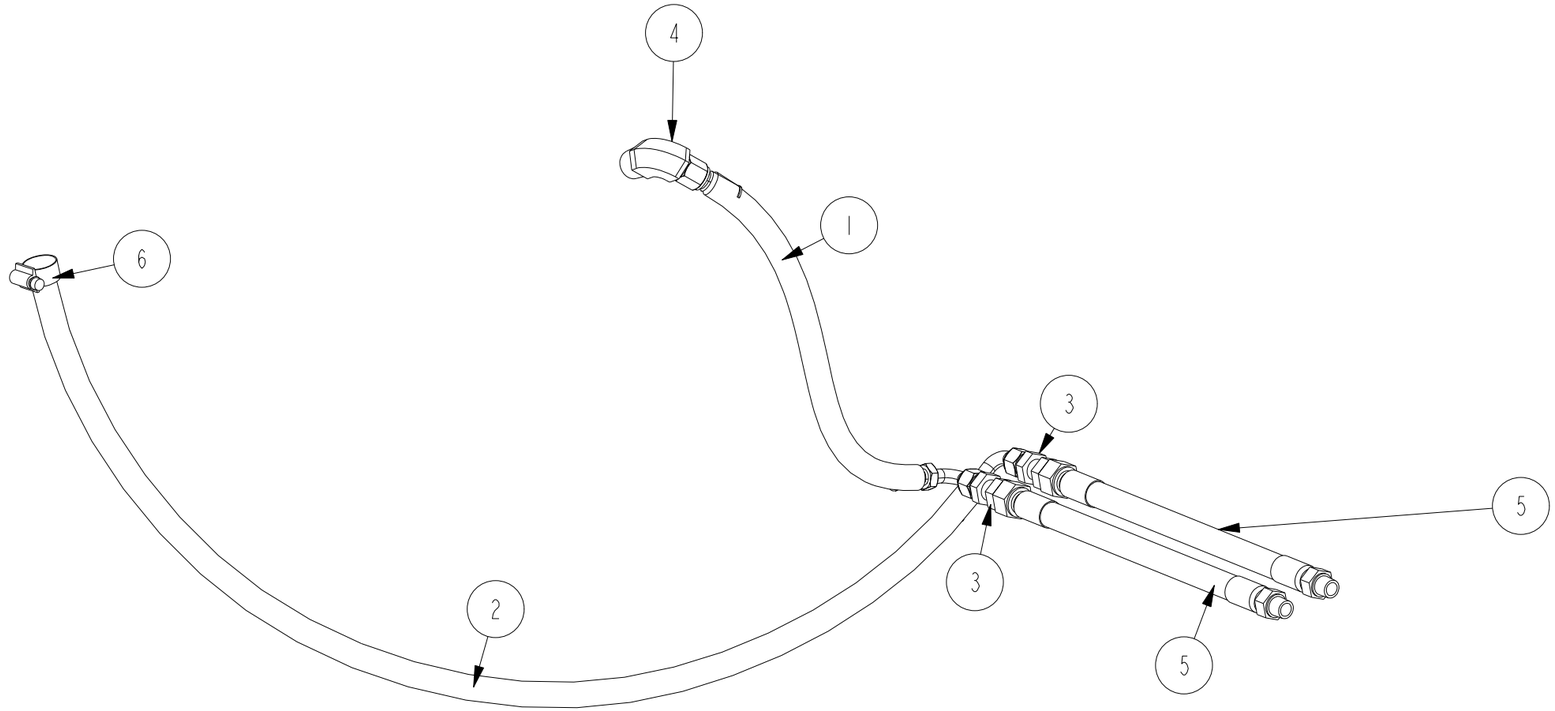

REV		DESCRIPTION OF REVISION	REV BY	DATE
E	2009-313	UPDATED BULHEADS, FITTINGS & HOSE. ADDED FLEX HOSES	DAN	16-JUL-09

This document contains confidential and trade secret information, is the property of Cummins Fire Power LLC and is given to the receiver in confidence. The receiver, by receiving and retaining of the document accepts the document in confidence and agrees that, except as authorized in writing by Cummins NPower, it will (1) not use the document or any copy thereof or the confidential or trade secret information therein, (2) not copy the document, (3) not disclose to others either the document or the confidential or trade secret information therein, and (4) upon completion of the need to retain the document, or upon demand, return the document, all copies thereof, and all material copied therefrom. COPYRIGHT Cummins Fire Power LLC

UNLESS OTHERWISE SPECIFIED ALL DIMENSION TOLERANCES ARE

ANGULAR DIMENSIONS ± 1°	IMPERIAL UNITS	METRIC UNITS
THIRD ANGLE PROJECTION	MACHINE TOLERANCES .XX : ± 0.010 .XXX : ± 0.005 FORM TOLERANCES .XX : ± 0.030 .XXX : ± 0.015 FAB TOLERANCES .XX : ± 0.060 .XXX : ± 0.030	MACHINE TOLERANCES .X : ± 0.4 .XX : ± 0.2 FORM TOLERANCES .X : ± 0.8 .XX : ± 0.4 FAB TOLERANCES .X : ± 1.5 .XX : ± 0.8

Cummins Fire Power

CUMMINS FIRE POWER LLC
CORPORATE OFFICE
1600 BUERKLE ROAD
WHITE BEAR LAKE, MN
WWW.CUMMINSFIREPOWER.COM

CUSTOM DESIGN
AND UPFIT CENTER
875 LAWRENCE DRIVE
DEPERE, WISCONSIN

KIT, FUEL LINE, CFP59
CFP59-F15/F25/F45

DWG UNITS: IN/LB/S	DRAWN BY: DAVE N	DATE: 12OCT2005
	PRO-ENGINEER	REF DRWG:
SCALE: 0.250	SHEET 1 OF 1	DRAWING NO: 9752
EST WEIGHT: 1.119		

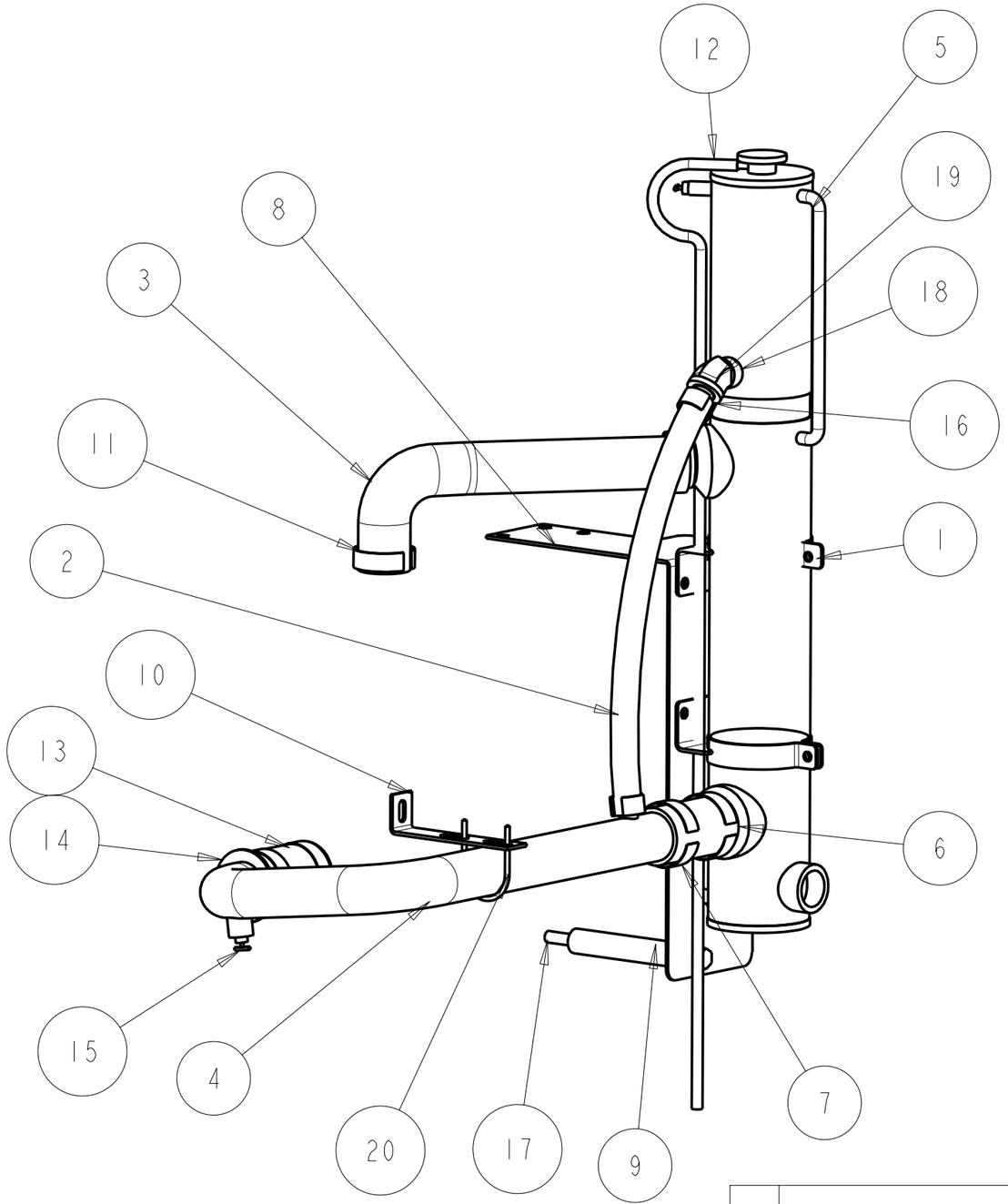

BILL OF MATERIAL

ITEM	QTY	DESCRIPTION	PART NUMBER
1	2	CLAMP, HEAT EXCHANGER, 4", CHAMP #300377, FIREPUMP	8659
2	1	FILL HOSE, 3/4" ID X 20" LG #70232GL, -	70232GL_8650
3	1	HOSE, COOLING, 1.75" I.D., FIREPUMP, 6B/4B	8566
4	1	TUBE, COOLING, 2" OD, FIREPUMP	8567
5	1	HEAT EXCHANGER, 4" #CM011504-1, FIREPUMP, TEMP	8652
6	1	COUPLING, HOSE, 2.0" I.D., FIREPUMP	8653
7	4	CLAMP, 2-5/8" NOMINAL, #92240	8654
8	1	BRACKET, MOUNTING, HEAT EXCHANGER, FIREPUMP, 6B/4B	8655
9	1	SPACER, STAN-OFF, 6.33 LG, FIREPUMP	8656
10	1	BRACKET, MOUNTING, TUBE SUPPORT, FIREPUMP	8657
11	2	CLAMP, 2-1/8" NOMINAL, #92232	8661
12	1	TUBE, OVERFLOW, 5/16" ID x 36" LG	8662
13	1	COUPLING, HOSE, 2.25" I.D., #77225GL, FIREPUMP	8664
14	1	SLEEVE, 2.25" X 2" #903	8963
15	2	DRAIN VALVE, 1/4" NPT	80511
16	2	CLAMP, 1" NOMINAL, #92216	92216
17	1	BOLT, M12 X 200	BOLT_M12X200
18	1	STREET ELBOW, BLK, 3/4" NPT, 45 DEG.	E3445
19	1	ADAPTER, 3/4" NPT X 3/4" OD (#8288)	R-68HB_12-8
20	1	U-BOLT, 2"	U200

REV	DESCRIPTION OF REVISION	REV BY	DATE
H	ADDED ELBOW	DAVE N	01JUL05
G	REMOVED ADDED VENT LINE	DAVE N	28MAY05
F	ADDED DRAIN VALVE & CPLG HOSE	DAVE N	22DEC04

ALL RIGHTS TO MANUFACTURE, COPY OR DISPOSE OF THIS DRAWING OR ITS CONTENTS ARE RESERVED UNLESS OTHERWISE SPECIFIED IN WRITING BY CUMMINS NPOWER, LLC

UNLESS OTHERWISE SPECIFIED
ALL DIMENSION TOLERANCES ARE
ANGULAR DIMENSIONS ± 1°

IMPERIAL UNITS

MACHINE TOLERANCES
.X : ± 0.06
.XX : ± 0.010
.XXX : ± 0.001

WELD TOLERANCES
X : ± 0.25
.XX : ± 0.12
.XXX : ± 0.06

METRIC UNITS

MACHINE TOLERANCES
X : ± 1.5
X.X : ± 0.5
X.XX : ± 0.05

WELD TOLERANCES
X : ± 5
X.X : ± 3
X.XX : ± 1.50

CUMMINS NPOWER, LLC
CORPORATE OFFICE
1600 BUERKLE ROAD
WHITE BEAR LAKE, MN
WWW.NPOWER.CUMMINS.COM

NPOWER SYSTEMS
DESIGN CENTER
875 LAWRENCE DRIVE
DEPERE, WISCONSIN

TITLE 1: ASSEMBLY, HEAT EXCHANGER W/O CAC
TITLE 2: FIREPUMP, NFP-659

DWG UNITS: IN/LB/S	DRAWN BY: DAVE N				DATE: 01JUN2004	
	APPD BY:				DATE:	
EST WEIGHT: 26.617	SCALE: 0.188	DO NOT SCALE	SHEET 1OF1	DRAWING NO: 8650	REV: H	

8682-01 FOR VERTICLE TURBINE PUMP:
REMOVE VALVE ITEM #7 AND REPLACE WITH
ITEM #6 - 6" LONG NIPPLE

8682-02 FOR 24 VOLT OPERATION:
REMOVE VALVE ITEM #7 AND REPLACE WITH
ASCO #8210G3-24vdc

BILL OF MATERIAL

ITEM	QTY	DESCRIPTION	PART NUMBER
1	2	REGULATOR, 3/4" NPT, 400 PSI MAX, 25 TO 75 PSI OUT	8890
2	2	STRAINER, 3/4" NPT W/ PLUG	8891
3	1	GUAGE, PRESSURE, 1/4" NPT, 0-100 PSI RANGE	8892
4	2	TAG, COOLANT LOOP LABEL, VERTICAL MTG	10965
5	1	BUSHING, REDUCING, 3/4" NPT X 1/4" NPT	71494
6	3	NIPPLE, BLK, 3/4x6	71550
7	1	VALVE, ELEC ACT, BRASS, 3/4" NPT, 12vdc, 150 PSI MAX	8210G3-12VDC
8	1	VALVE, BALL, 1/4" NPT	FA60204-1
9	4	VALVE, BALL, 3/4" NPT	FA60406
10	1	NIPPLE, BLK, 1/4 X CLOSE	LTL-CPN14
11	10	NIPPLE, BLK, 3/4x1-1/2	LTL-CPN34
12	1	ELBOW, BLK, 3/4" NPT, 90 DEG.	LTL-E3490
13	2	CLAMP, 1"	LTL-SCPV16627
14	2	PLUG, 1/2 NPT, -	LTL-SCSP12
15	3	TEE, BLK, 3/4" NPT	LTL-ST34

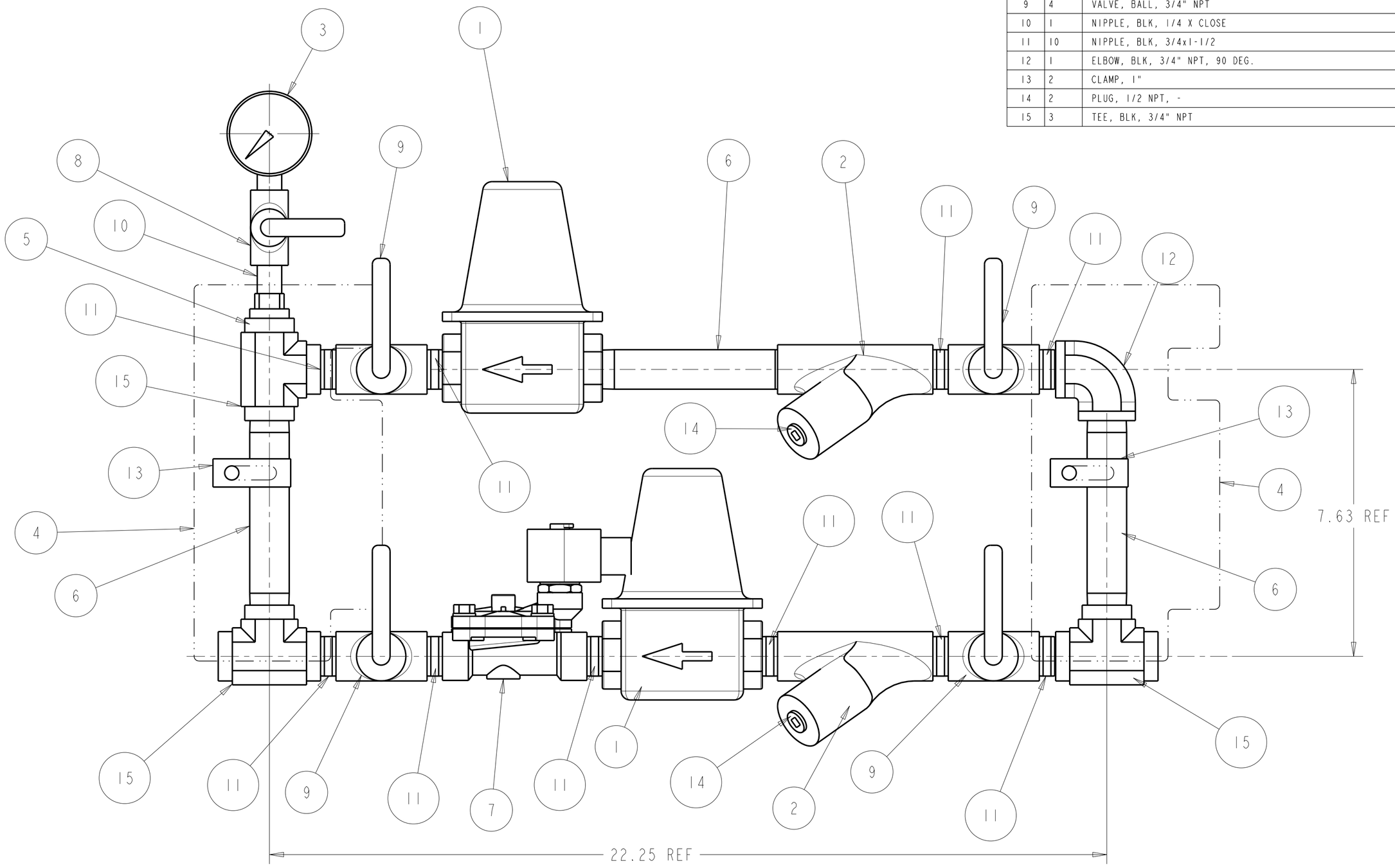

VALVES SHOWN CLOSED - NOT IN OPERATING POSITION

REV	DESCRIPTION OF REVISION	REV BY	DATE
D	REV PER PART NUMBERS	DAVE N	19SEP06

This document contains confidential and trade secret information, is the property of Cummins NPower, LLC and is given to the receiver in confidence. The receiver, by receiving and retaining of the document accepts the document in confidence and agrees that, except as authorized in writing by Cummins NPower, it will (1) not use the document or any copy thereof or the confidential or trade secret information therein, (2) not copy the document, (3) not disclose to others either the document or the confidential or trade secret information therein, and (4) upon completion of the need to retain the document, or upon demand, return the document, all copies thereof, and all material copied therefrom. COPYRIGHT Cummins NPower, LLC

UNLESS OTHERWISE SPECIFIED ALL DIMENSION TOLERANCES ARE

ANGULAR DIMENSIONS ± 1° | IMPERIAL UNITS | METRIC UNITS

THIRD ANGLE PROJECTION

MACHINE TOLERANCES .XX ± 0.010 .XXX ± 0.005
FORM TOLERANCES .XX ± 0.030 .XXX ± 0.015
FAB TOLERANCES .X ± 0.060 .XX ± 0.030

MACHINE TOLERANCES .X ± 0.2 .XX ± 0.1
FORM TOLERANCES .X ± 0.8 .XX ± 0.4
FAB TOLERANCES .X ± 1.5 .XX ± 0.8

REF. SCALES

Fire Power

CUMMINS NPOWER, LLC
CORPORATE OFFICE
1600 BUERKLE ROAD
WHITE BEAR LAKE, MN
WWW.NPOWER.CUMMINS.COM

NPOWER SYSTEMS
DESIGN CENTER
875 LAWRENCE DRIVE
DEPERE, WISCONSIN

TITLE 1: ASSEMBLY, RAW WATER COOLING, 3/4" NPT
TITLE 2: FIREPUMP

DWG UNITS: IN/LB/S	DRAWN BY: DAVE N		DATE: 12JUN2004		
	APPD BY:		DATE:		
EST WEIGHT: 42238.628	SCALE: 0.500	DO NOT SCALE	SHEET 1OF1	DRAWING NO: 8682	REV: D

PN 8724
SO 35324
Model 6BTA5.9G3
Config D403050DX02

Option	Desc
FIRE 35	6BTA5.9G3
AF 9006	ADAPTER,FRONT DR
△A AH 9000	HEATER,AIR INTAK
AP 9229	APPROVAL,AGENCY
BP 9042	BASE PARTS
△A BP 9703	COVER,FRONT GEAR
BP 9710	LEVER,ROCKER
BP 9711	FOLLOWER,CAM
△A BP97149	BLOCK,ENGINE
CM 9016	COVER,CAM FOLLOW
CM 9701	COVER,CAM FOLLOW
DF 9051	DRIVE,FRT GR TR
△A DL 9001	LOCATION,FUEL DR
△A EC 9039	THERMOSTAT
△A EH 9001	LOCATION,ALTERNA
EH 9993	DRIVE,ALTERNATOR
EI 9000	DRIVE,MECH TACH
EI 9701	DRIVE,MECH TACH
FA 9000	DRIVE,FAN
FF 9003	FILTER,FUEL
△A FF 9740	PLUMBING,FUEL FI
FH 9002	HOUSING,FLYWHEEL
FP 9211	COUPLING,FUEL PU
△A FP90368	PUMP,FUEL
△A FR91231	RATING,FUEL
△A FS 9004	PUMP,LIFT
△A FT97121	PLUMBING,FUEL
△A FV 9001	VALVE,FUEL SHUTO
△A FW 9222	FLYWHEEL
LA 9007	BRACKET,LIFTING
LC 9020	COOLER,ENGINE OI
LG 9058	GAUGE,OIL LEVEL
LP 9714	PUMP,LUBRICATING
OB 9000	COVER,CYLINDER B
OB 9704	COVER,CYLINDER B
OP 9006	PAN,OIL
OP 9702	MOUNTING,OIL PAN
△A PP 8387	PERFORMANCE,PART
PP97222	HEAD,CYLINDER
PP97298	1 MOUNTING,CYLINDE
△A PP97611	1 TURBOCHARGER
SG 9000	1 PACKAGE,GUARD
SM 9701	1 MOUNTING,STARTER
SS 9005	1 PAINT
SS 9075	1 SKID
SS 9702	1 ENGINE,DRY
△A ST 9368	1 MOTOR,STARTING
△A TB 9766	1 MOUNTING,TURBOCH
TB 9792	1 MANIFOLD,EXHAUS
TTB90006	1 LOCATION,TURBOCH
TH 9001	1 HOUSING,THERMOST
TP 9703	1 PLUMBING,TURBOCH
VC 9005	COVER,VALVE
△A WA 9738	PLUMBING,AFTERCO
△A WI 9005	CONNECTION,WATER
△A WI 9701	CONNECTION,WATER
△A WP 9031	PUMP,WATER
△A XS 9009	CONNECTION,EXHAU

BUILT BEFORE JANUARY 1, 2007

PN 8724
SO 35324
Model 6BTA5.9G3
Config D403050DX02

Option	Desc
FIRE 35	6BTA5.9G3
AF 9006	ADAPTER,FRONT DR
AH 9000	HEATER,AIR INTAK
△B AP 9529	APPROVAL,AGENCY
BP 9042	BASE PARTS
BP 9703	COVER,FRONT GEAR
BP 9710	LEVER,ROCKER
BP 9711	FOLLOWER,CAM
BP97149	BLOCK,ENGINE
CM 9016	COVER,CAM FOLLOW
CM 9701	COVER,CAM FOLLOW
DF 9051	DRIVE,FRT GR TR
DL 9001	LOCATION,FUEL DR
EC 9039	THERMOSTAT
EH 9001	LOCATION,ALTERNA
EH 9993	DRIVE,ALTERNATOR
EI 9000	DRIVE,MECH TACH
EI 9701	DRIVE,MECH TACH
FA 9000	DRIVE,FAN
FF 9003	FILTER,FUEL
FF 9740	PLUMBING,FUEL FI
FH 9002	HOUSING,FLYWHEEL
FP 9211	COUPLING,FUEL PU
FP90368	PUMP,FUEL
FR91231	RATING,FUEL
FS 9004	PUMP,LIFT
FT97121	PLUMBING,FUEL
FV 9001	VALVE,FUEL SHUTO
△B FW 9828	FLYWHEEL
LA 9007	BRACKET,LIFTING
LC 9020	COOLER,ENGINE OI
LG 9058	GAUGE,OIL LEVEL
LP 9714	PUMP,LUBRICATING
OB 9000	COVER,CYLINDER B
OB 9704	COVER,CYLINDER B
OP 9006	PAN,OIL
OP 9702	MOUNTING,OIL PAN
PP 8387	PERFORMANCE,PART
PP97222	HEAD,CYLINDER
PP97298	MOUNTING,CYLINDE
PP97611	TURBOCHARGER
SG 9000	PACKAGE,GUARD
SM 9701	MOUNTING,STARTER
SS 9005	PAINT
△B SS 9024	OIL,LUBRICATING
△B SS 9075	ARRANGEMENT, SHIP
△B SS 9701	OIL, ENGINE
ST 9368	MOTOR,STARTING
TB 9766	MOUNTING,TURBOCH
TB 9792	MANIFOLD,EXHAUS
TTB90006	LOCATION,TURBOCH
TH 9001	HOUSING,THERMOST
TP 9703	PLUMBING,TURBOCH
VC 9005	COVER,VALVE
WA 9738	PLUMBING,AFTERCO
WI 9005	CONNECTION,WATER
WI 9701	CONNECTION,WATER
WP 9031	PUMP,WATER
XS 9009	CONNECTION,EXHAU

BUILT AFTER JANUARY 1, 2007

REV	DESCRIPTION OF REVISION	BY	DATE
B	UPDATED PER ENGINE SPEC AND DWG BORDER	DAVE N	08JAN2007
A	REDRAWN PER ENGINE SPEC	DAVE N	16OCT2004

ALL RIGHTS TO MANUFACTURE, COPY OR DISPOSE OF THIS DRAWING OR ITS CONTENTS ARE RESERVED UNLESS OTHERWISE SPECIFIED IN WRITING BY CUMMINS NPOWER, LLC

UNLESS OTHERWISE NOTED
–
ALL DIMENSIONS ARE IN INCHES
–
APPLY MACHINE TOLERANCES
.X = ± 0.06
.XX = ± 0.010
.XXX = ± 0.001
–
APPLY WELDED TOLERANCES
.X = ± 0.25
.XX = ± 0.12
.XXX = ± 0.06

Cummins Fire Power
CUMMINS NPOWER
CORPORATE OFFICE
1600 BUERKLE ROAD
WHITE BEAR LAKE, MN
WWW.NPOWER.CUMMINS.COM

CUMMINS FIRE POWER
DESIGN CENTER
875 LAWRENCE DRIVE
DEPERE, WISCONSIN
WWW.CUMMINSFIREPOWER.COM

DWG SCALE: NTS	DRAWN BY: DAVE N	DATE: 23SEP2004
PLOT SCALE:	APPD BY:	DATE:

DESCRIPTION
ASSEMBLY, ENGINE, 6BTA5.9G3

REFERENCE:
CFP59–F10/20/40/50

DRAWING NUMBER:
8724B

PN 8725
SO 35325
Model B5.9C
Config D402056DX02

Option	Desc
FIRE 29	B5.9-C
AH 9021	HEATER,AIR INTAK
AP 9001	APPROVAL,AGENCY
BP 9052	BASE PARTS
BP 9710	LEVER,ROCKER
BP 9711	FOLLOWER,CAM
BP97101	COVER,FRONT GEAR
BP97149	BLOCK,ENGINE
CM 9016	COVER,CAM FOLLOW
CM 9701	COVER,CAM FOLLOW
DA 9026	DAMPER,VIBRATION
DF 9051	DRIVE,FRT GR TR
DL 9028	LOCATION,FUEL DR
△A EC 9039	THERMOSTAT
EE9249	Alternator, 12v, 95A, Delco 11SI
EH 9001	LOCATION,ALTERNA
EH 9993	DRIVE,ALTERNATOR
EI 9000	DRIVE,MECH TACH
EI 9701	DRIVE,MECH TACH
FA 9000	DRIVE,FAN
FE 9000	PLUMBING,AIR FUE
FF 9104	FILTER,FUEL
FF 9790	PLUMBING,FUEL FI
FH 9002	HOUSING,FLYWHEEL
FP97760	PUMP,BASE FUEL
FP97774	COUPLING,FUEL PU
FR90026	RATING,FUEL
FS 9128	PUMP,LIFT
FT 9960	PLUMBING,FUEL
FV 9308	VALVE,FUEL SHUTO
△A FW 9222	FLYWHEEL
LA 9007	BRACKET,LIFTING
LC 9020	COOLER,ENGINE OI
LG 9058	GAUGE,OIL LEVEL
LP 9714	PUMP,LUBRICATING
OB 9000	COVER,CYLINDER B
OB 9704	COVER,CYLINDER B
OP 9006	PAN,OIL
OP 9702	MOUNTING,OIL PAN
PP 1948	PERFORMANCE,PART
PP97246	TURBOCHARGER
PP97298	MOUNTING,CYLINDE
PP97946	HEAD, CYLINDER
△A SM 9701	MOUNTING,STARTER
SS 9005	PAINT
SS 9075	SKID
SS 9702	ENGINE,DRY
△A ST 9368	MOTOR,STARTING
TB 9375	LOCATION,TURBOCH
TB 9767	MOUNTING,TURBOCH
TB 9792	MANIFOLD,EXHAUS
TTB90006	LOCATION,TURBOCH
TH 9001	HOUSING,THERMOST
TP 9703	PLUMBING,TURBOCH
VC 9005	COVER,VALVE
WI 9005	CONNECTION,WATER
△A WI 9701	CONNECTION,WATER
△A WP 9031	PUMP,WATER
△A XS 9009	CONNECTION,EXHAU

BUILT BEFORE JANUARY 1, 2007

PN 8725
SO 35325
Model B5.9C
Config D402056DX02

Option	Desc
FIRE 29	B5.9-C
AH 9021	HEATER,AIR INTAK
△B AP 9536	APPROVAL,AGENCY
BP 9052	BASE PARTS
BP 9710	LEVER,ROCKER
BP 9711	FOLLOWER,CAM
BP97101	COVER,FRONT GEAR
BP97149	BLOCK,ENGINE
CM 9016	COVER,CAM FOLLOW
CM 9701	COVER,CAM FOLLOW
DA 9026	DAMPER,VIBRATION
DF 9051	DRIVE,FRT GR TR
DL 9028	LOCATION,FUEL DR
EC 9039	THERMOSTAT
EE9249	Alternator, 12v, 95A, Delco 11SI
EH 9001	LOCATION,ALTERNA
EH 9993	DRIVE,ALTERNATOR
EI 9000	DRIVE,MECH TACH
EI 9701	DRIVE,MECH TACH
FA 9000	DRIVE,FAN
△B FE 9809	PLUMBING,AIR FUE
FF 9104	FILTER,FUEL
FF 9790	PLUMBING,FUEL FI
FH 9002	HOUSING,FLYWHEEL
FP97760	PUMP,BASE FUEL
FP97774	COUPLING,FUEL PU
FR90026	RATING,FUEL
FS 9128	PUMP,LIFT
FT 9960	PLUMBING,FUEL
FV 9308	VALVE,FUEL SHUTO
△B FW 9828	FLYWHEEL
LA 9007	BRACKET,LIFTING
LC 9020	COOLER,ENGINE OI
LG 9058	GAUGE,OIL LEVEL
LP 9714	PUMP,LUBRICATING
OB 9000	COVER,CYLINDER B
OB 9704	COVER,CYLINDER B
OP 9006	PAN,OIL
OP 9702	MOUNTING,OIL PAN
PP 1948	PERFORMANCE,PART
PP97246	TURBOCHARGER
PP97298	MOUNTING,CYLINDE
PP97946	HEAD, CYLINDER
SM 9701	MOUNTING,STARTER
SS 9005	PAINT
△B SS 9024	OIL, LUBRICATING
△B SS 9075	ARRANGEMENT,SHIP
△B SS 9701	OIL,ENGINE
ST 9368	MOTOR,STARTING
TB 9375	LOCATION,TURBOCH
TB 9767	MOUNTING,TURBOCH
TB 9792	MANIFOLD,EXHAUS
TTB90006	LOCATION,TURBOCH
TH 9001	HOUSING,THERMOST
TP 9703	PLUMBING,TURBOCH
VC 9005	COVER,VALVE
WI 9005	CONNECTION,WATER
WI 9701	CONNECTION,WATER
WP 9031	PUMP,WATER
XS 9009	CONNECTION,EXHAU

BUILT AFTER JANUARY 1, 2007

REV	DESCRIPTION OF REVISION	BY	DATE
B	UPDATED PER ENGINE SPEC AND DWG BORDER	DAVE N	08JAN2007
A	REDRAWN PER ENGINE SPEC	DAVE N	16OCT2004

ALL RIGHTS TO MANUFACTURE, COPY OR DISPOSE OF THIS DRAWING OR ITS CONTENTS ARE RESERVED UNLESS OTHERWISE SPECIFIED IN WRITING BY CUMMINS NPOWER, LLC

UNLESS OTHERWISE NOTED
–
ALL DIMENSIONS ARE IN INCHES
–
APPLY MACHINE TOLERANCES
.X = ± 0.06
.XX = ± 0.010
.XXX = ± 0.001
–
APPLY WELDED TOLERANCES
.X = ± 0.25
.XX = ± 0.12
.XXX = ± 0.06

Cummins Fire Power
CUMMINS NPOWER
CORPORATE OFFICE
1600 BUERKLE ROAD
WHITE BEAR LAKE, MN
WWW.NPOWER.CUMMINS.COM

CUMMINS FIRE POWER
DESIGN CENTER
875 LAWRENCE DRIVE
DEPERE, WISCONSIN
WWW.CUMMINSFIREPOWER.COM

DWG SCALE: NTS	DRAWN BY: DAVE N	DATE: 23SEP2004
PLOT SCALE:	APPD BY:	DATE:

DESCRIPTION
ASSEMBLY, ENGINE, 6BTAC165

REFERENCE:
CFP59–F15/25

DRAWING NUMBER:
8725B

PN 8726
SO 35326
Model B5.9-C
Config D403065CX02

Option	Desc
FIRE 26	B5.9-C
AH 9050	HEATER,AIR INTAK
AP 9001	APPROVAL,AGENCY
BP 9042	BASE PARTS
BP 9710	LEVER,ROCKER
BP 9711	FOLLOWER,CAM
BP97034	COVER,FRONT GEAR
BP97149	BLOCK,ENGINE
CM 9016	COVER,CAM FOLLOW
CM 9701	COVER,CAM FOLLOW
DF 9051	DRIVE,FRT GR TR
DL 9028	LOCATION,FUEL DR
EC 9009	THERMOSTAT
△A EE9249	Alternator, 12v, 95A, Delco 11SI
EH 9001	LOCATION,ALTERNA
EH 9993	DRIVE,ALTERNATOR
EI 9000	DRIVE,MECH TACH
EI 9701	DRIVE,MECH TACH
FA 9000	DRIVE,FAN
FE9798	PLUMBING,AIR FUE
FF 9108	FILTER,FUEL
FF 9779	PLUMBING,FUEL FI
FH 9002	HOUSING,FLYWHEEL
FP97774	COUPLING,FUEL PU
FP99355	PUMP,BASE FUEL
FR91093	RATING,FUEL
FS 9109	PUMP,LIFT
FT 9952	PLUMBING,FUEL
FV 9308	VALVE,FUEL SHUTO
△A FW 9222	FLYWHEEL
LA 9007	BRACKET,LIFTING
LC 9020	COOLER,ENGINE OI
LG 9058	GAUGE,OIL LEVEL
LP 9714	PUMP,LUBRICATING
OB 9000	COVER,CYLINDER B
OB 9704	COVER,CYLINDER B
OP 9006	PAN,OIL
OP 9702	MOUNTING,OIL PAN
PP 1961	PERFORMANCE,PART
PP97222	HEAD,CYLINDER
PP97298	MOUNTING,CYLINDE
PP97181	TURBOCHARGER
△A SM 9701	MOUNTING,STARTER
SS 9005	PAINT
SS 9075	SKID
SS 9702	ENGINE,DRY
△A ST 9368	MOTOR,STARTING
TB 9342	LOCATION,TURBOCH
TB 9767	MOUNTING,TURBOCH
TB 9792	MANIFOLD,EXHAUS
TH 9046	HOUSING,THERMOST
TP 9703	PLUMBING,TURBOCH
VC 9005	COVER,VALVE
WA 9724	PLUMBING,AFTERCO
△A WI 9005	CONNECTION,WATER
WI 9701	CONNECTION,WATER
WP 9031	PUMP,WATER
△A XS 9009	CONNECTION,EXHAU

BUILT BEFORE JANUARY 1, 2007

PN 8726
SO 35326
Model B5.9-C
Config D403065CX02

Option	Desc
FIRE 26	B5.9-C
AH 9050	HEATER,AIR INTAK
AP 9356	APPROVAL,AGENCY
BP 9042	BASE PARTS
BP 9710	LEVER,ROCKER
BP 9711	FOLLOWER,CAM
BP97034	COVER,FRONT GEAR
BP97149	BLOCK,ENGINE
CM 9016	COVER,CAM FOLLOW
CM 9701	COVER,CAM FOLLOW
DF 9051	DRIVE,FRT GR TR
DL 9028	LOCATION,FUEL DR
EC 9009	THERMOSTAT
EE9249	Alternator, 12v, 95A, Delco 11SI
EH 9001	LOCATION,ALTERNA
EH 9993	DRIVE,ALTERNATOR
EI 9000	DRIVE,MECH TACH
FA 9000	DRIVE,FAN
FE 9798	PLUMBING,AIR FUE
FF 9108	FILTER,FUEL
FF 9779	PLUMBING,FUEL FI
FH 9002	HOUSING,FLYWHEEL
FP97774	COUPLING,FUEL PU
FP99355	PUMP,BASE FUEL
FR91093	RATING,FUEL
FS 9109	PUMP,LIFT
FT 9952	PLUMBING,FUEL
FV 9308	VALVE,FUEL SHUTO
△B FW 9828	FLYWHEEL
LA 9007	BRACKET,LIFTING
LC 9020	COOLER,ENGINE OI
LG 9058	GAUGE,OIL LEVEL
LP 9714	PUMP,LUBRICATING
OB 9000	COVER,CYLINDER B
OB 9704	COVER,CYLINDER B
OP 9006	PAN,OIL
OP 9702	MOUNTING,OIL PAN
PP 1961	PERFORMANCE,PART
PP97222	HEAD,CYLINDER
PP97298	MOUNTING,CYLINDE
PP97181	TURBOCHARGER
SM 9701	MOUNTING,STARTER
SS 9005	PAINT
△B SS 9024	OIL,LUBRICATING
△B SS 9075	ARRANGEMENT,SHIP
△B SS 9701	OIL,ENGINE
ST 9368	MOTOR,STARTING
TB 9342	LOCATION,TURBOCH
TB 9767	MOUNTING,TURBOCH
TB 9792	MANIFOLD,EXHAUS
△B TH 9001	HOUSING,THERMOST
TP 9703	PLUMBING,TURBOCH
VC 9005	COVER,VALVE
WA 9724	PLUMBING,AFTERCO
WI 9005	CONNECTION,WATER
WI 9701	CONNECTION,WATER
WP 9031	PUMP,WATER
XS 9009	CONNECTION,EXHAU

BUILT AFTER JANUARY 1, 2007

REV	DESCRIPTION OF REVISION	BY	DATE
B	UPDATED PER ENGINE SPEC AND DWG BORDER	DAVE N	08JAN2007
A	REDRAWN PER ENGINE SPEC	DAVE N	16OCT2004

ALL RIGHTS TO MANUFACTURE, COPY OR DISPOSE OF THIS DRAWING OR ITS CONTENTS ARE RESERVED UNLESS OTHERWISE SPECIFIED IN WRITING BY CUMMINS NPOWER, LLC

UNLESS OTHERWISE NOTED
–
ALL DIMENSIONS ARE IN INCHES
–
APPLY MACHINE TOLERANCES
.X = ± 0.06
.XX = ± 0.010
.XXX = ± 0.001
–
APPLY WELDED TOLERANCES
.X = ± 0.25
.XX = ± 0.12
.XXX = ± 0.06

Cummins Fire Power
CUMMINS NPOWER
CORPORATE OFFICE
1600 BUERKLE ROAD
WHITE BEAR LAKE, MN
WWW.NPOWER.CUMMINS.COM

CUMMINS FIRE POWER
DESIGN CENTER
875 LAWRENCE DRIVE
DEPERE, WISCONSIN
WWW.CUMMINSFIREPOWER.COM

DWG SCALE: NTS	DRAWN BY: DAVE N	DATE: 23SEP2004
PLOT SCALE:	APPD BY:	DATE:

DESCRIPTION
ASSEMBLY, ENGINE, 6BTA5.9–C174

REFERENCE: CFP59–F45

DRAWING NUMBER: 8726B

PN 8741
SO 19953
Model 6BTA5.9-F1
Config D403018FX02

OPTION	QTY	DESC
FIRE	1	
AP 9001	1	APPROVAL,AGEN
BP 9042	1	BASE PARTS
BP 9703	1	COVER,FRONT G
BP 9710	1	LEVER,ROCKER
BP 9711	1	FOLLOWER,CAM
BP97149	1	BLOCK,ENGINE
CH 9014	1	HEATER,COOLAN
CM 9016	1	COVER,CAM FOL
DA 9026	1	DAMPER,VIBRAT
DF 9051	1	DRIVE,FRT GR
DL 9001	1	LOCATION,FUEL
EC 9001	1	THERMOSTAT
EE 9249	1	DELCO 11SI, 12V 95A
EH 9001	1	MTG, ALT
EH 9993	1	MTG, ALT
EI 9000	1	DRIVE,MECH TA
EI 9701	1	DRIVE,MECH TA
FA 9000	1	DRIVE,FAN
FF 9002	1	FILTER,FUEL
FF 9701	1	PLUMBING,FUEL
FH 9002	1	HOUSING,FLYWH
FP 9419	1	PUMP,BASE FUE
FP 9701	1	COUPLING,FUEL
FR 9374	1	RATING,FUEL
FS 9052	1	PUMP,LIFT
FT97034	1	PLUMBING,FUEL
FV 9026	1	VALVE,FUEL SH
FW 9059	1	FLYWHEEL 8 / 10
FW 9020	1	FLYWHEEL 10 / 12
LA 9007	1	BRACKET,LIFTI
LC 9020	1	COOLER,ENGINE
LG 9062	1	GAUGE,OIL LEV
LP 9714	1	PUMP,LUBRICAT
OB 9000	1	COVER,CYLINDE
OB 9704	1	COVER,CYLINDE
OP 9006	1	PAN,OIL
OP 9702	1	MOUNTING,OIL
PP 1165	1	PERFORMANCE P
PP 9765	1	TURBOCHARGER
PP97298	1	MOUNTING,CYLI
PP97948	1	HEAD,CYLINDER
SS 9036	1	PAINT
SS 9075	1	SKID
SS 9702	1	ENGINE,DRY
ST 9369	1	Denso 8/10 R4
ST 9234	1	Denso 10/12 R4
TB 9786	1	MANIFOLD,EXHA
TB90038	1	LOCATION,TURB
TB97033	1	MANIFOLD,EXHA
TH 9001	1	HOUSING,THERM
TP 9714	1	PLUMBING,TURB
VC 9005	1	COVER,VALVE
WA 9713	1	PLUMBING,AFTE
WI 9053	1	CONNECTION,WA
WI 9702	1	CONNECTION,WA
WP 9031	1	PUMP,WATER
~~3924201~~	~~1~~	~~CMC OPTION-EH~~
~~3924202~~	~~1~~	~~CMC OPTION-EH~~
3523046	1	Turbo Oulet flange - need new XS

BUILT BEFORE JANUARY 1, 2007

PN 8741
SO 19953
Model 6BTA5.9-F1
Config D403018FX02

OPTION	QTY	DESC
FIRE	33	
△A AC 9173	1	CLEANER,AIR
△A AP 9534	1	APPROVAL,AGEN
BP 9042	1	BASE PARTS
BP 9703	1	COVER,FRONT G
BP 9710	1	LEVER,ROCKER
BP 9711	1	FOLLOWER,CAM
BP97149	1	BLOCK,ENGINE
△A CH 9097	1	AID,COO HEATER S
CM 9016	1	COVER,CAM FOL
DA 9026	1	DAMPER,VIBRAT
DF 9051	1	DRIVE,FRT GR
DL 9001	1	LOCATION,FUEL
△A EC 9039	1	THERMOSTAT
EE 9249	1	DELCO 11SI, 12V 95A
EH 9001	1	MTG, ALT
EH 9993	1	MTG, ALT
EI 9000	1	DRIVE,MECH TA
EI 9701	1	DRIVE,MECH TA
△A EM 9258	1	SUPPORT, FRONT EN
FA 9000	1	DRIVE,FAN
FF 9002	1	FILTER,FUEL
FF 9701	1	PLUMBING,FUEL
FH 9002	1	HOUSING,FLYWH
FP 9419	1	PUMP,BASE FUE
FP 9701	1	COUPLING,FUEL
FR 9374	1	RATING,FUEL
FS 9052	1	PUMP,LIFT
FT97034	1	PLUMBING,FUEL
FV 9026	1	VALVE,FUEL SH
FW 9059	1	FLYWHEEL 8 / 10
△A HX 9127	1	EXCHANGER,HEAT
LA 9007	1	BRACKET,LIFTI
LC 9020	1	COOLER,ENGINE
LG 9062	1	GAUGE,OIL LEV
LP 9714	1	PUMP,LUBRICAT
△A LT 9314	1	LITERATURE
OB 9000	1	COVER,CYLINDE
OB 9704	1	COVER,CYLINDE
△A OP 9005	1	PAN,OIL
OP 9702	1	MOUNTING,OIL
PP 1165	1	PERFORMANCE P
PP 9765	1	TURBOCHARGER
PP97298	1	MOUNTING,CYLI
PP97948	1	HEAD,CYLINDER
△A RE 9058	1	SUPPORT,REAR ENG
△A SB 9088	1	ACCESSORIES,ELE
△A SG 9062	1	GUARD,FRONT ENGI
△A SM 9062	1	MOUNTING, STARTING
△A SS 9024	1	OIL,LUBRICATING
SS 9036	1	PAINT
△A SS 9075	1	ARRANGEMENT,SHIP
△A SS 9701	1	OIL,ENGINE
△A ST 9368	1	MOTOR,STARTING
TB 9786	1	MANIFOLD,EXHA
TB90038	1	LOCATION,TURB
TB97033	1	MANIFOLD,EXHA
TH 9001	1	HOUSING,THERM
△A TL 9003	1	LEVER, THROTTLE
TP 9714	1	PLUMBING,TURB
VC 9005	1	COVER,VALVE
WA 9713	1	PLUMBING,AFTE
△A WI 9005	1	CONNECTION,WA
WI 9702	1	CONNECTION,WA
WP 9031	1	PUMP,WATER
3523046	1	Turbo Oulet flange - need new XS

BUILT AFTER JANUARY 1, 2007

REV	DESCRIPTION OF REVISION	BY	DATE
A	UPDATED PER ENGINE SPEC AND DWG BORDER	DAVE N	09JAN2007

ALL RIGHTS TO MANUFACTURE, COPY OR DISPOSE OF THIS DRAWING OR ITS CONTENTS ARE RESERVED UNLESS OTHERWISE SPECIFIED IN WRITING BY CUMMINS NPOWER, LLC

UNLESS OTHERWISE NOTED
–
ALL DIMENSIONS ARE IN INCHES
–
APPLY MACHINE TOLERANCES
.X = ± 0.06
.XX = ± 0.010
.XXX = ± 0.001
–
APPLY WELDED TOLERANCES
.X = ± 0.25
.XX = ± 0.12
.XXX = ± 0.06

Cummins Fire Power
CUMMINS NPOWER
CORPORATE OFFICE
1600 BUERKLE ROAD
WHITE BEAR LAKE, MN
WWW.NPOWER.CUMMINS.COM

CUMMINS FIRE POWER
DESIGN CENTER
875 LAWRENCE DRIVE
DEPERE, WISCONSIN
WWW.CUMMINSFIREPOWER.COM

DWG SCALE: NTS	DRAWN BY: DAVE N	DATE: 23SEP2004	
PLOT SCALE:	APPD BY:	DATE:	

DESCRIPTION
ASSEMBLY, ENGINE, 6BTA5.9

REFERENCE:	DRAWING NUMBER:
CFP59–F55	8741A

DETAIL A
SCALE 0.400

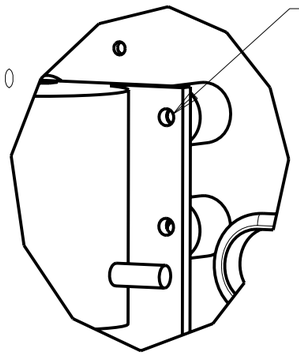

INSTALL ISOLATORS (4) ON CONTACTORS USING LOCTITE #425 BLUE, HAND TIGHT

DETAIL B
SCALE 0.400

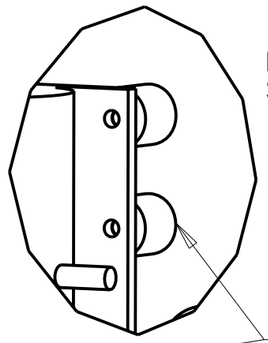

BILL OF MATERIAL

ITEM	QTY	DESCRIPTION	PART NUMBER
1	1	ASSEMBLY, INSTRUMENT PANEL, ISOLATED, FIREPUMP	13236
2	1	GROMMETT	508-1057
3	2	CONTACTOR, MANUAL OVERIDE, FIREPUMP	8824
4	1	BATTERY ISOLATOR, FIRE PUMP	8838
5	1	BRACKET, OPERATORS STATION, B & C SERIES, FIREPUMP	9561
6	8	ISOLATOR, PLATE MOUNT, 5/16-18x1x1 NEOPRENE, TECH PRODUCTS #51272	13011
7	2	GROMMETT, 1.50 DIA HOLE	19447

(E) (D)

(E) SEE DETAIL A

ATTACH CONTACTOR AND PANEL ASSYS WITH LOCTITE #425 BLUE ON FASTENERS, HAND TIGHT + 1/4 TURN.

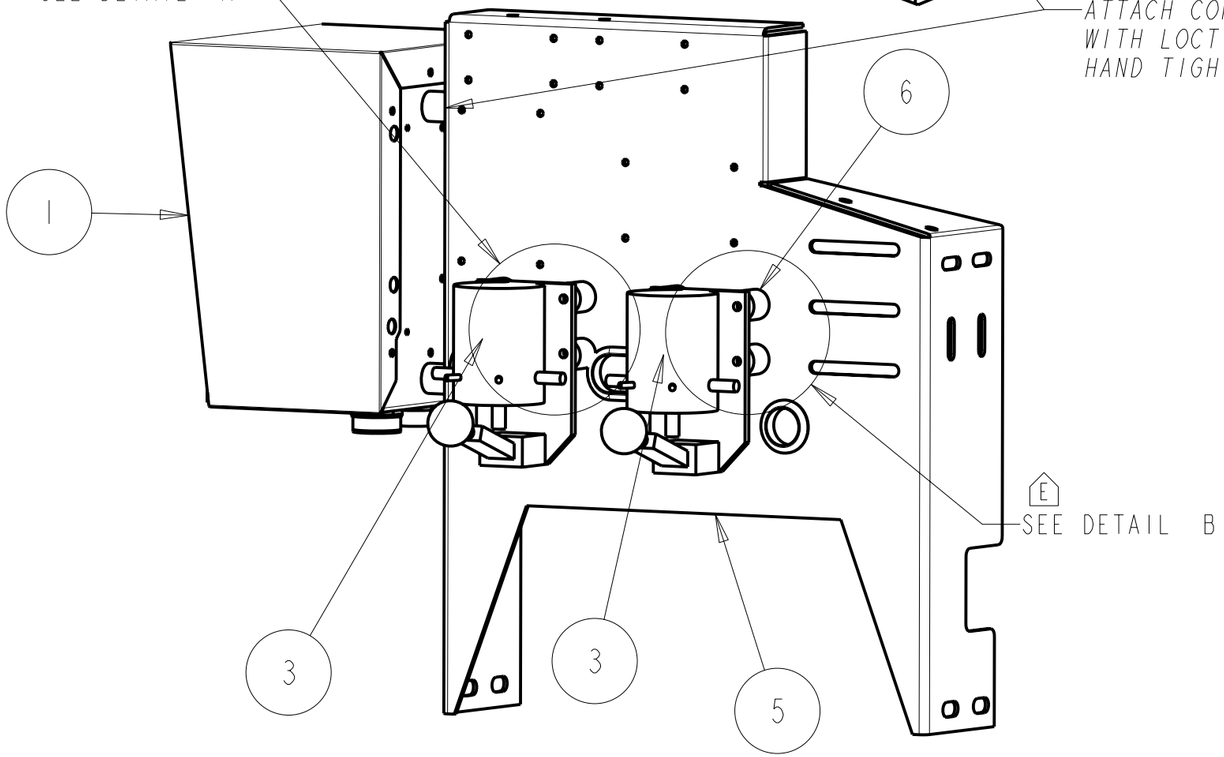

(E) SEE DETAIL B

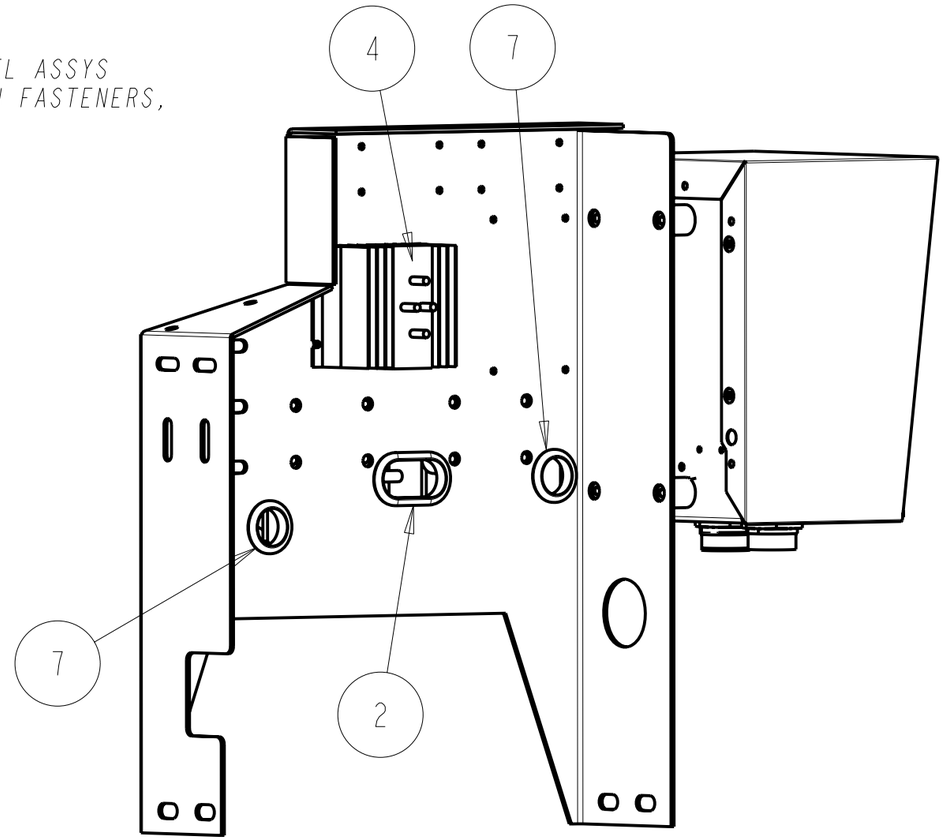

REV	DESCRIPTION OF REVISION	REV BY	DATE
E	MODIFIED ISOLATOR MTG SPEC	S DUBICK	16JUL08
D	CHANGED ISOLATOR	S DUBICK	28MAY08
C	REV PER PANEL	DAVE N	13OCT06
B	REV PER BRKT. ADDED GROMMETS	DAVE N	15DEC04

This document contains confidential and trade secret information, is the property of Cummins NPower, LLC and is given to the receiver in confidence. The receiver, by receiving and retaining of the document accepts the document in confidence and agrees that, except as authorized in writing by Cummins NPower, it will (1) not use the document or any copy thereof or the confidential or trade secret information therein, (2) not copy the document, (3) not disclose to others either the document or the confidential or trade secret information therein, and (4) upon completion of the need to retain the document, or upon demand, return the document, all copies thereof, and all material copied therefrom. COPYRIGHT Cummins NPower, LLC

UNLESS OTHERWISE SPECIFIED ALL DIMENSION TOLERANCES ARE

ANGULAR DIMENSIONS ± 1°

THIRD ANGLE PROJECTION

IMPERIAL UNITS	METRIC UNITS
MACHINE TOLERANCES .XX : ± 0.010 .XXX : ± 0.005	MACHINE TOLERANCES .X : ± 0.4 .XX : ± 0.2
FORM TOLERANCES .XX : ± 0.030 .XXX : ± 0.015	FORM TOLERANCES .X : ± 0.8 .XX : ± 0.4
FAB TOLERANCES .XX : ± 0.060 .XXX : ± 0.030	FAB TOLERANCES .X : ± 1.5 .XX : ± 0.8

REF. SCALES

NPower

CUMMINS NPOWER, LLC
CORPORATE OFFICE
1600 BUERKLE ROAD
WHITE BEAR LAKE, MN
WWW.NPOWER.CUMMINS.COM

NPOWER SYSTEMS
DESIGN CENTER
875 LAWRENCE DRIVE
DEPERE, WISCONSIN

TITLE 1: ASSEMBLY, OPERATORS STATION, 6B MARINE
TITLE 2: FIREPUMP

DWG UNITS: IN/LB/S	DRAWN BY: DAVE N				DATE: 11AUG2004
	APPD BY:				DATE:
EST WEIGHT: 56.960	SCALE: 0.200	DO NOT SCALE	SHEET 1OF1	DRAWING NO: 9560	REV: E

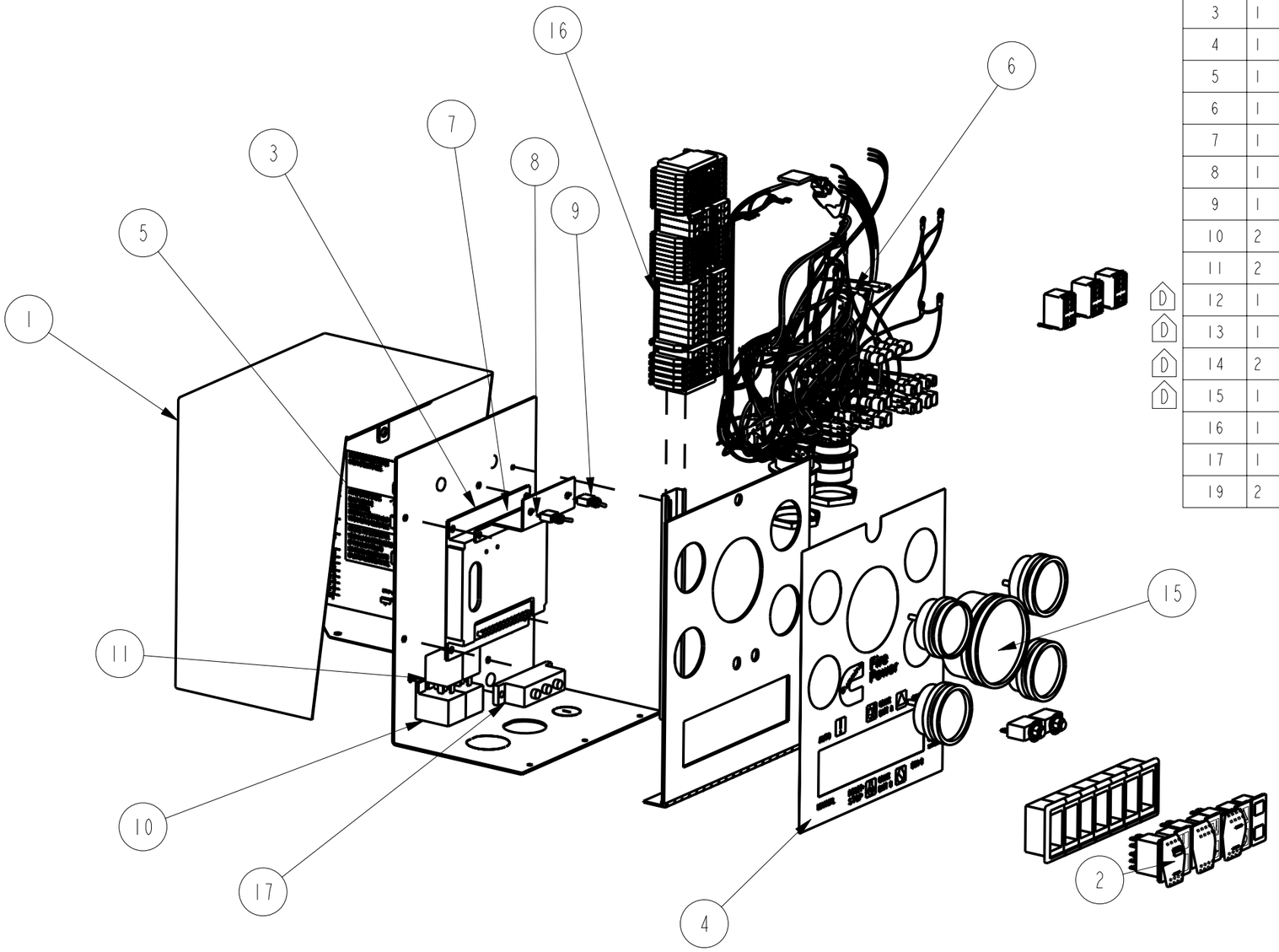

BILL OF MATERIAL

ITEM	QTY	DESCRIPTION	PART NUMBER
E 1	1	ENCLOSURE, FIREPUMP INSTRUMENT	10454
2	1	ASSEMBLY, SWITCH GANG, FIREPUMP	11084
3	1	MODULE, OVERSPEED, FIREPUMP	8836
4	1	DECAL, INSTRUMENT PANEL, FIREPUMP	10731
5	1	DECAL, INSTRUCTION, GAUGE PANEL	11136
6	1	ASSEMBLY, HARNESS, INSTRUMENT PANEL, FIREPUMP	11185
7	1	BRACKET, TOGGLE SWITCH MOUNTING, FIREPUMP GAUGE PANEL - E-ENG	8887
8	1	SWITCH, TOGGLE, MINIATURE, MOMENTARY (ON)-OFF-(ON)	8889
9	1	SWITCH, TOGGLE, MINIATURE, SUSTAINED ON-OFF-ON	8888
10	2	RELAY HOLDER, FIREPUMP	9528
11	2	RELAY, INSTRUMENT PANEL, 40 AMP, 12vdc	8857
D 12	1	GUAGE, OIL PRESSURE, 0-80 PSI, 12VDC, FIREPUMP	11194
D 13	1	GUAGE, WATER TEMPERATURE, 12VDC, FIREPUMP	11197
D 14	2	GUAGE, VOLTMETER 8-18VDC, FIREPUMP	11200
D 15	1	GUAGE, TACHOMETER/HOUR METER, FIREPUMP	11202
16	1	ASSEMBLY, TERMINALS, GAUGE PANEL, FIREPUMP	11137
17	1	MODULE, DIODE, INSTRUMENT PANEL, FIREPUMP	9529
19	2	CIRCUIT BREAKER, INSTRUMENT PANEL, FIREPUMP	11203

NOTES:
GAUGE PANEL EXPLOSION DEPICTED FOR SERVICE PART IDENTIFICATION. WHERE APPLICABLE, SUB-ASSEMBLY DRAWINGS MAY BE REQUIRED FOR COMPONENT DETAIL(S). WIRING HARNESS IS NOT FIELD SERVICEABLE WITHOUT TRP ISSUED BY CUMMINS FIREPOWER IF APPLICABLE.

REV	DESCRIPTION OF REVISION	REV BY	DATE
E	MODIFIED 10454	S DUBICK	28MAY08
D	CORRECTED GAUGE P/N'S	S.DANFORTH	02JAN07
C	REDRAWN AND RELEASED	ANTONIO G.	25SEP06
B	REVISED TERMINAL STRIP	S.DANFORTH	
A	PROTOTYPE RELEASE	S.DANFORTH	10JUL2006

This document contains confidential and trade secret information, is the property of Cummins NPower, LLC and is given to the receiver in confidence. The receiver, by receiving and retaining of the document accepts the document in confidence and agrees that, except as authorized in writing by Cummins NPower, it will (1) not use the document or any copy thereof or the confidential or trade secret information therein, (2) not copy the document, (3) not disclose to others either the document or the confidential or trade secret information therein, and (4) upon completion of the need to retain the document, or upon demand, return the document, all copies thereof, and all material copied therefrom. COPYRIGHT Cummins NPower, LLC

UNLESS OTHERWISE SPECIFIED ALL DIMENSION TOLERANCES ARE

ANGULAR DIMENSIONS ± 1°

THIRD ANGLE PROJECTION

IMPERIAL UNITS	METRIC UNITS
MACHINE TOLERANCES .XX : ± 0.010 .XXX : ± 0.005	MACHINE TOLERANCES .X : ± 0.4 .XX : ± 0.2
FORM TOLERANCES .XX : ± 0.030 .XXX : ± 0.015	FORM TOLERANCES .X : ± 0.8 .XX : ± 0.4
FAB TOLERANCES .XX : ± 0.060 .XXX : ± 0.030	FAB TOLERANCES .X : ± 1.5 .XX : ± 0.8

REF. SCALES

Fire Power

CUMMINS NPOWER, LLC
CORPORATE OFFICE
1600 BUERKLE ROAD
WHITE BEAR LAKE, MN
WWW.NPOWER.CUMMINS.COM

NPOWER SYSTEMS
DESIGN CENTER
875 LAWRENCE DRIVE
DEPERE, WISCONSIN

TITLE 1: ASSEMBLY, INSTRUMENT PANEL 12V
TITLE 2: FIREPUMP

DWG UNITS: IN/LB/S	DRAWN BY: S.DANFORTH				DATE: 10JUL2006
	APPD BY:				DATE:
EST WEIGHT: 21.524	SCALE: 0.200	DO NOT SCALE	SHEET 1OF1	DRAWING NO: 10452	REV: E

BILL OF MATERIAL

ITEM	QTY	DESCRIPTION	PART NUMBER
1	2	RELAY, INSTRUMENT PANEL, 40 AMP, 12vdc	8857
2	1	ENCLOSURE, FIREPUMP INSTRUMENT	10454
3	1	ASSEMBLY, SWITCH GANG, FIREPUMP	11084
4	1	ASSEMBLY, TERMINALS, GAUGE PANEL, FIREPUMP	11137
5	1	ASSEMBLY, HARNESS, INSTRUMENT PANEL, FIREPUMP	11185
6	1	MODULE, OVERSPEED, FIREPUMP	8836
7	1	BRACKET, TOGGLE SWITCH MOUNTING, FIREPUMP GAUGE PANEL - E-ENG	8887
8	1	SWITCH, TOGGLE, MINIATURE, SUSTAINED ON-OFF-ON	8888
9	1	SWITCH, TOGGLE, MINIATURE, MOMENTARY (ON)-OFF-(ON)	8889
10	2	RELAY HOLDER, FIREPUMP	9528
11	1	MODULE, DIODE, INSTRUMENT PANEL, FIREPUMP	9529
12	1	DECAL, INSTRUMENT PANEL, FIREPUMP	10731
13	1	DECAL, INSTRUCTION, GAUGE PANEL	11136
14	1	GUAGE, OIL PRESSURE, 0-80 PSI, 12VDC, FIREPUMP	11194
15	1	GUAGE, WATER TEMPERATURE, 12VDC, FIREPUMP	11197
16	2	GUAGE, VOLTMETER 8-18VDC, FIREPUMP	11200
17	1	GUAGE, TACHOMETER/HOUR METER, FIREPUMP	11202
18	2	CIRCUIT BREAKER, INSTRUMENT PANEL, FIREPUMP	11203
19	4	ISOLATOR, PLATE MOUNT, 5/16-18x1x1 NEOPRENE, TECH PRODUCTS #51272	13011

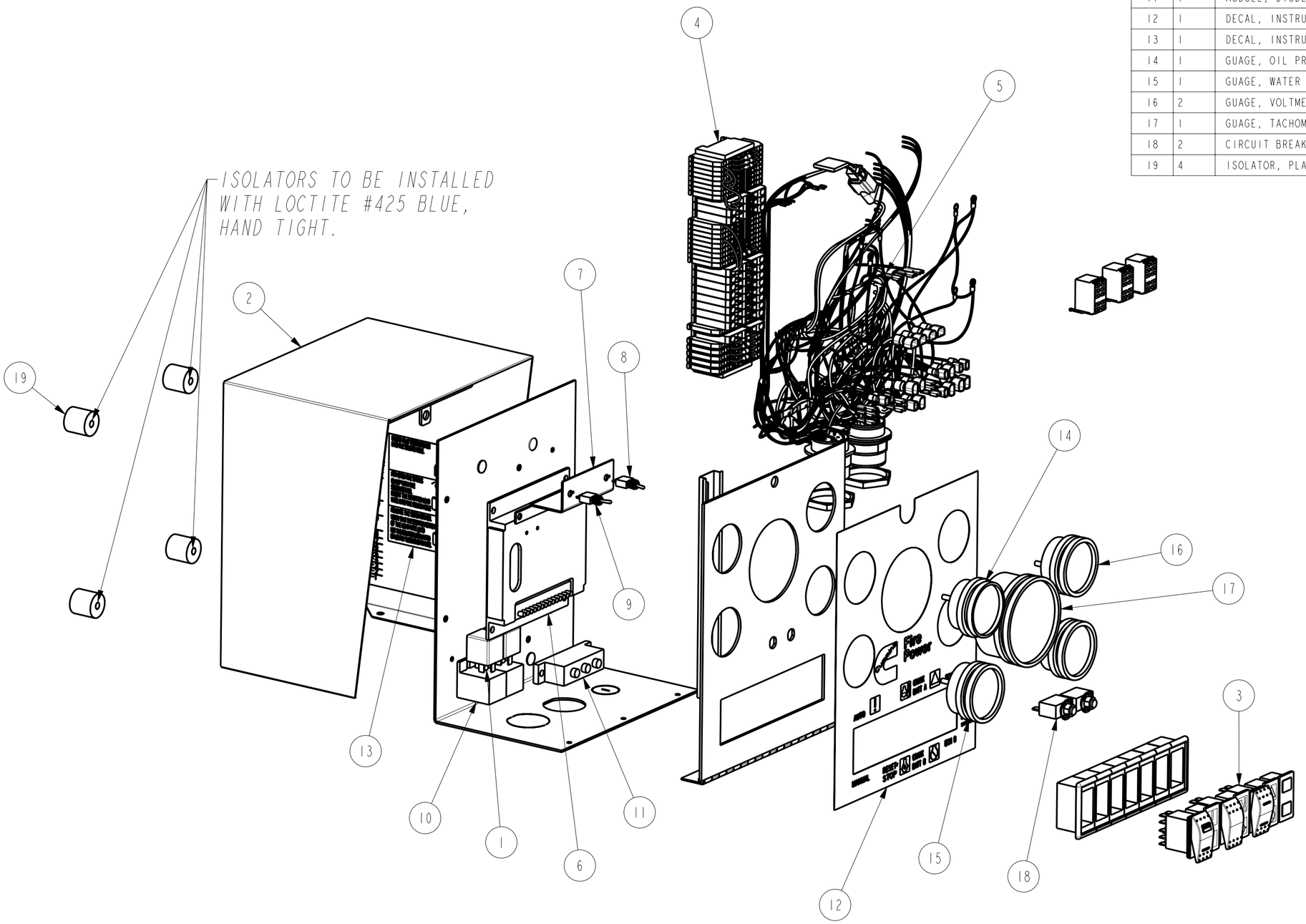

NOTES:

* GAUGE PANEL EXPLOSION DEPICTED FOR SERVICE PART ID.
* WHERE APPLICABLE, SUB-ASSEMBLY DRAWINGS MAY BE REQUIRED FOR COMPONENT DETAILS.
* WIRING HARNESS IS NOT FIELD SERVICEABLE WITHOUT TRP ISSUED BY CUMMINS FIREPOWER IF APPLICABLE.

REV	DESCRIPTION OF REVISION	REV BY	DATE

This document contains confidential and trade secret information, is the property of Cummins NPower, LLC and is given to the receiver in confidence. The receiver, by receiving and retaining of the document accepts the document in confidence and agrees that, except as authorized in writing by Cummins NPower, it will (1) not use the document or any copy thereof or the confidential or trade secret information therein, (2) not copy the document, (3) not disclose to others either the document or the confidential or trade secret information therein, and (4) upon completion of the need to retain the document, or upon demand, return the document, all copies thereof, and all material copied therefrom. COPYRIGHT Cummins NPower, LLC

UNLESS OTHERWISE SPECIFIED ALL DIMENSION TOLERANCES ARE

ANGULAR DIMENSIONS ± 1° | IMPERIAL UNITS | METRIC UNITS

THIRD ANGLE PROJECTION

MACHINE TOLERANCES .XX ± 0.010 .XXX ± 0.005
FORM TOLERANCES .XX ± 0.030 .XXX ± 0.015
FAB TOLERANCES .X ± 0.060 .XX ± 0.030

MACHINE TOLERANCES .X ± 0.2 .XX ± 0.2
FORM TOLERANCES .X ± 0.8 .XX ± 0.4
FAB TOLERANCES .X ± 1.5 .XX ± 0.8

REF. SCALES

Fire Power

CUMMINS NPOWER, LLC
CORPORATE OFFICE
1600 BUERKLE ROAD
WHITE BEAR LAKE, MN
WWW.NPOWER.CUMMINS.COM

NPOWER SYSTEMS
DESIGN CENTER
875 LAWRENCE DRIVE
DEPERE, WISCONSIN

TITLE 1: ASSEMBLY, INSTRUMENT PANEL 12V, ISOLATED
TITLE 2: FIREPUMP

DWG UNITS: IN/LB/S	DRAWN BY: S.DANFORTH		DATE: 10JUL2006	
	APPD BY:		DATE:	
EST WEIGHT: 21.524	SCALE: 0.300	DO NOT SCALE	SHEET 1OF1	DRAWING NO: 13236	REV: _

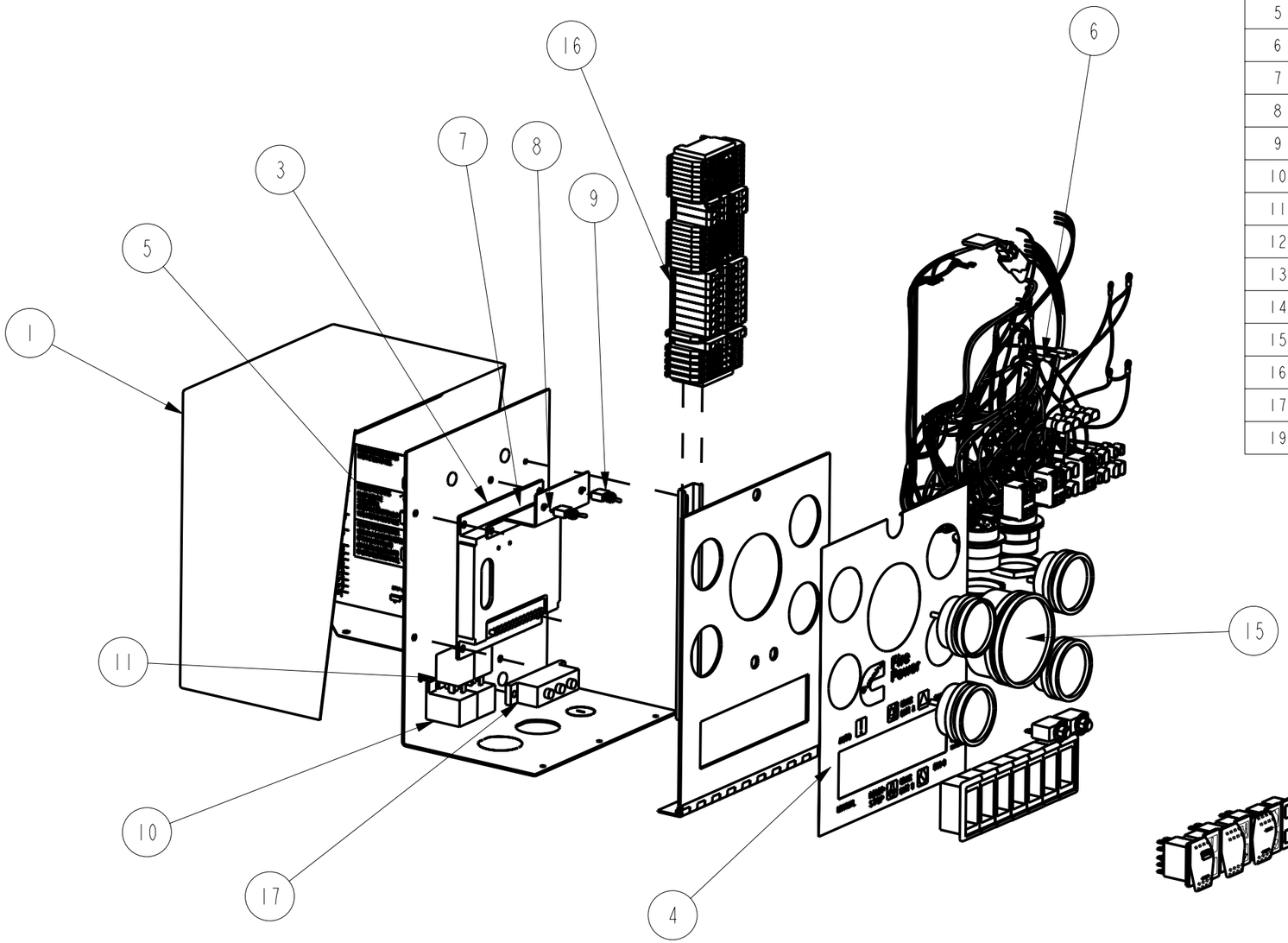

BILL OF MATERIAL

ITEM	QTY	DESCRIPTION	PART NUMBER
1	1	ENCLOSURE, FIREPUMP INSTRUMENT	10454
2	1	ASSEMBLY, SWITCH GANG 24VDC, FIREPUMP	11085
3	1	MODULE, OVERSPEED, FIREPUMP	8836
4	1	DECAL, INSTRUMENT PANEL, FIREPUMP	10731
5	1	DECAL, INSTRUCTION, GAUGE PANEL	11136
6	1	ASSEMBLY, HARNESS, INSTRUMENT PANEL, FIREPUMP	11185
7	1	BRACKET, TOGGLE SWITCH MOUNTING, FIREPUMP GAUGE PANEL - E-ENG	8887
8	1	SWITCH, TOGGLE, MINIATURE, MOMENTARY (ON)-OFF-(ON)	8889
9	1	SWITCH, TOGGLE, MINIATURE, SUSTAINED ON-OFF-ON	8888
10	2	RELAY HOLDER, FIREPUMP	9528
11	2	RELAY, INSTRUMENT PANEL, 40 AMP, 12vdc	8857
12	1	GUAGE, OIL PRESSURE, 0-80 PSI, 24VDC, FIREPUMP	11195
13	1	GUAGE, WATER TEMPERATURE, 24VDC, FIREPUMP	11198
14	2	GUAGE, VOLTMETER 16-32VDC, FIREPUMP	11201
15	1	GUAGE, TACHOMETER/HOUR METER, FIREPUMP	11202
16	1	ASSEMBLY, TERMINALS, GAUGE PANEL, FIREPUMP	11137
17	1	MODULE, DIODE, INSTRUMENT PANEL, FIREPUMP	9529
19	2	CIRCUIT BREAKER, INSTRUMENT PANEL, FIREPUMP	11203

NOTES:
GAUGE PANEL EXPLOSION DEPICTED FOR SERVICE PART IDENTIFICATION. WHERE APPLICABLE, SUB-ASSEMBLY DRAWINGS MAY BE REQUIRED FOR COMPONENT DETAIL(S). WIRING HARNESS IS NOT FIELD SERVICEABLE WITHOUT TRP ISSUED BY CUMMINS FIREPOWER IF APPLICABLE.

REV	DESCRIPTION OF REVISION	REV BY	DATE
E	MODIFIED 10454	S DUBICK	28MAY08
D	11085 WAS 11084	S.DANFORTH	02JAN07
C	REDRAWN AND RELEASED	ANTONIO G.	25SEP06
B	REVISED TERMINAL STRIP	S.DANFORTH	
A	PROTOTYPE RELEASE	S.DANFORTH	10JUL2006

This document contains confidential and trade secret information, is the property of Cummins NPower, LLC and is given to the receiver in confidence. The receiver, by receiving and retaining of the document accepts the document in confidence and agrees that, except as authorized in writing by Cummins NPower, it will (1) not use the document or any copy thereof or the confidential or trade secret information therein, (2) not copy the document, (3) not disclose to others either the document or the confidential or trade secret information therein, and (4) upon completion of the need to retain the document, or upon demand, return the document, all copies thereof, and all material copied therefrom. COPYRIGHT Cummins NPower, LLC

UNLESS OTHERWISE SPECIFIED ALL DIMENSION TOLERANCES ARE

ANGULAR DIMENSIONS ± 1°

THIRD ANGLE PROJECTION

IMPERIAL UNITS	METRIC UNITS
MACHINE TOLERANCES .XX = ± 0.010 .XXX = ± 0.005	MACHINE TOLERANCES .X = ± 0.4 .XX = ± 0.2
FORM TOLERANCES .XX = ± 0.030 .XXX = ± 0.015	FORM TOLERANCES .X = ± 0.8 .XX = ± 0.4
FAB TOLERANCES .XX = ± 0.060 .XXX = ± 0.030	FAB TOLERANCES .X = ± 1.5 .XX = ± 0.8

REF. SCALES

Fire Power

CUMMINS NPOWER, LLC
CORPORATE OFFICE
1600 BUERKLE ROAD
WHITE BEAR LAKE, MN
WWW.NPOWER.CUMMINS.COM

NPOWER SYSTEMS
DESIGN CENTER
875 LAWRENCE DRIVE
DEPERE, WISCONSIN

TITLE 1: ASSEMBLY, INSTRUMENT PANEL 24V
TITLE 2: FIREPUMP

DWG UNITS:	DRAWN BY: S.DANFORTH		DATE: 10JUL2006		
IN/LB/S	APPD BY:		DATE:		
EST WEIGHT: 20.096	SCALE: 0.200	DO NOT SCALE	SHEET 1OF1	DRAWING NO: 10453	REV: E

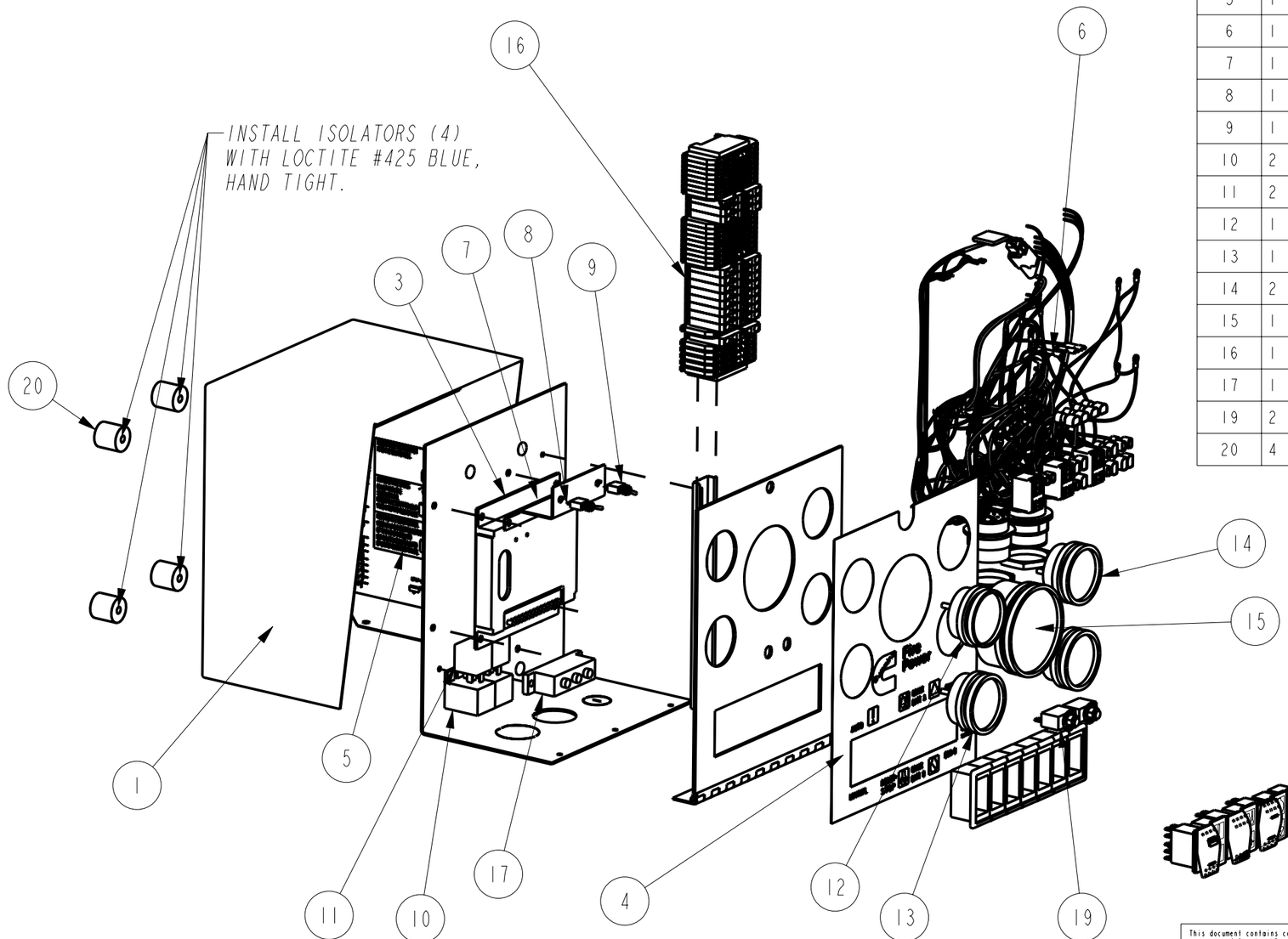

BILL OF MATERIAL

ITEM	QTY	DESCRIPTION	PART NUMBER
1	1	ENCLOSURE, FIREPUMP INSTRUMENT	10454
2	1	ASSEMBLY, SWITCH GANG 24VDC, FIREPUMP	11085
3	1	MODULE, OVERSPEED, FIREPUMP	8836
4	1	DECAL, INSTRUMENT PANEL, FIREPUMP	10731
5	1	DECAL, INSTRUCTION, GAUGE PANEL	11136
6	1	ASSEMBLY, HARNESS, INSTRUMENT PANEL, FIREPUMP	11185
7	1	BRACKET, TOGGLE SWITCH MOUNTING, FIREPUMP GAUGE PANEL - E-ENG	8887
8	1	SWITCH, TOGGLE, MINIATURE, MOMENTARY (ON)-OFF-(ON)	8889
9	1	SWITCH, TOGGLE, MINIATURE, SUSTAINED ON-OFF-ON	8888
10	2	RELAY HOLDER, FIREPUMP	9528
11	2	RELAY, INSTRUMENT PANEL, 40 AMP, 12vdc	8857
12	1	GUAGE, OIL PRESSURE, 0-80 PSI, 24VDC, FIREPUMP	11195
13	1	GUAGE, WATER TEMPERATURE, 24VDC, FIREPUMP	11198
14	2	GUAGE, VOLTMETER 16-32VDC, FIREPUMP	11201
15	1	GUAGE, TACHOMETER/HOUR METER, FIREPUMP	11202
16	1	ASSEMBLY, TERMINALS, GAUGE PANEL, FIREPUMP	11137
17	1	MODULE, DIODE, INSTRUMENT PANEL, FIREPUMP	9529
19	2	CIRCUIT BREAKER, INSTRUMENT PANEL, FIREPUMP	11203
20	4	ISOLATOR, PLATE MOUNT, 5/16-18x1x1 NEOPRENE, TECH PRODUCTS #51272	13011

NOTES:
GAUGE PANEL EXPLOSION DEPICTED FOR SERVICE PART IDENTIFICATION. WHERE APPLICABLE, SUB-ASSEMBLY DRAWINGS MAY BE REQUIRED FOR COMPONENT DETAIL(S). WIRING HARNESS IS NOT FIELD SERVICEABLE WITHOUT TRP ISSUED BY CUMMINS FIREPOWER IF APPLICABLE.

REV	DESCRIPTION OF REVISION	REV BY	DATE

This document contains confidential and trade secret information, is the property of Cummins NPower, LLC and is given to the receiver in confidence. The receiver, by receiving and retaining of the document accepts the document in confidence and agrees that, except as authorized in writing by Cummins NPower, it will (1) not use the document or any copy thereof or the confidential or trade secret information therein, (2) not copy the document, (3) not disclose to others either the document or the confidential or trade secret information therein, and (4) upon completion of the need to retain the document, or upon demand, return the document, all copies thereof, and all material copied therefrom. COPYRIGHT Cummins NPower, LLC

UNLESS OTHERWISE SPECIFIED ALL DIMENSION TOLERANCES ARE

ANGULAR DIMENSIONS ± 1°	IMPERIAL UNITS	METRIC UNITS
THIRD ANGLE PROJECTION	MACHINE TOLERANCES .XX : ± 0.010 .XXX : ± 0.005 FORM TOLERANCES .XX : ± 0.030 .XXX : ± 0.015 FAB TOLERANCES .XX : ± 0.060 .XXX : ± 0.030	MACHINE TOLERANCES .X : ± 0.4 .XX : ± 0.2 FORM TOLERANCES .X : ± 0.8 .XX : ± 0.4 FAB TOLERANCES .X : ± 1.5 .XX : ± 0.8

REF. SCALES

Fire Power

CUMMINS NPOWER, LLC
CORPORATE OFFICE
1600 BUERKLE ROAD
WHITE BEAR LAKE, MN
WWW.NPOWER.CUMMINS.COM

NPOWER SYSTEMS
DESIGN CENTER
875 LAWRENCE DRIVE
DEPERE, WISCONSIN

TITLE 1: ASSEMBLY, INSTRUMENT PANEL 24V, ISOLATED
TITLE 2: FIREPUMP

DWG UNITS: IN/LB/S	DRAWN BY: S DUBICK		DATE: 08/06/08
	APPD BY:		DATE:
EST WEIGHT: 20.096	SCALE: 0.200	DO NOT SCALE	SHEET 1OF1	DRAWING NO: 13237	REV: _

BILL OF MATERIAL

ITEM	QTY	DESCRIPTION	PART NUMBER
1	1	SWITCH, WATER TEMP, 200F SETTING, RS#85879-A3	8860
2	1	SWITCH, OIL PRESSURE, 16 PSI, RS#85858-A3	8861
3	1	SENDER, WATER TEMPERATURE, DATCON #02022-00	8862
4	1	SENDER, OIL TEMPERATURE, DATCON #02504-00	8863
5	1	SENSOR, MAG PICK UP	9569

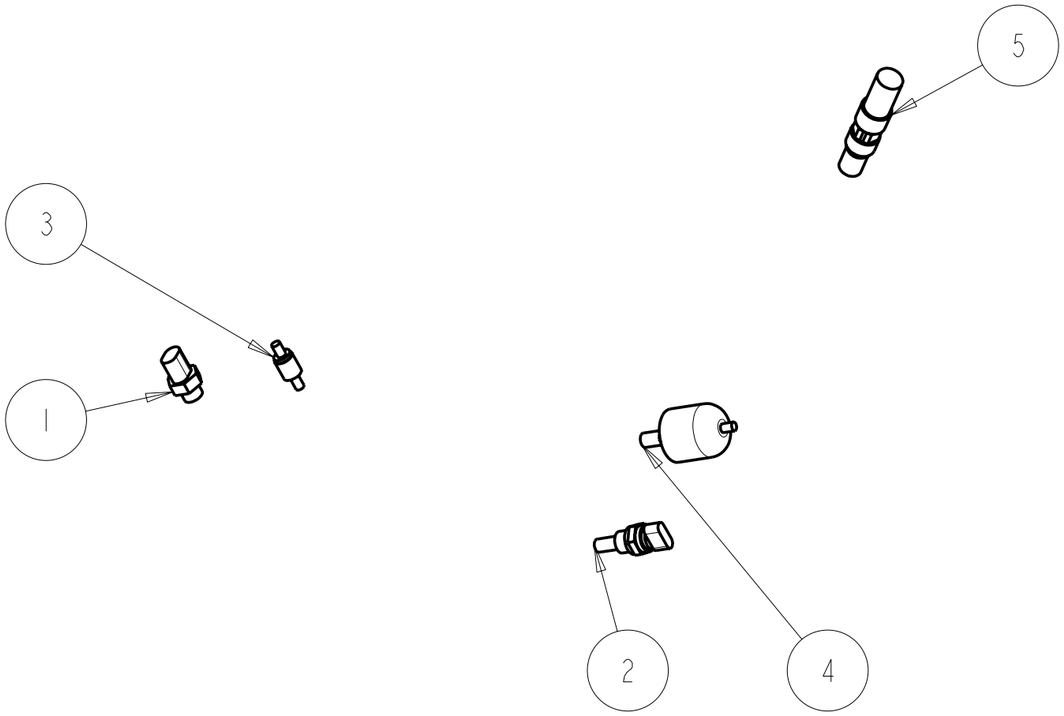

REV	DESCRIPTION OF REVISION	REV BY	DATE
A	REV AS BUILT		

ALL RIGHTS TO MANUFACTURE, COPY OR DISPOSE OF THIS DRAWING OR ITS CONTENTS ARE RESERVED UNLESS OTHERWISE SPECIFIED IN WRITING BY CUMMINS NPOWER, LLC

UNLESS OTHERWISE SPECIFIED
ALL DIMENSION TOLERANCES ARE

ANGULAR DIMENSIONS ± 1°

IMPERIAL UNITS	METRIC UNITS
MACHINE TOLERANCES .X = ± 0.06 .XX = ± 0.010 .XXX = ± 0.001 - WELD TOLERANCES .X = ± 0.25 .XX = ± 0.12 .XXX = ± 0.06	MACHINE TOLERANCES X = ± 1.5 X.X = ± 0.5 X.XX = ± 0.05 - WELDED TOLERANCES X = ± 5 X.X = ± 3 X.XX = ± 1.50

CUMMINS NPOWER, LLC
CORPORATE OFFICE
1600 BUERKLE ROAD
WHITE BEAR LAKE, MN
WWW.NPOWER.CUMMINS.COM

NPOWER SYSTEMS
DESIGN CENTER
875 LAWRENCE DRIVE
DEPERE, WISCONSIN

TITLE 1: ASSEMBLY, SENSOR PACKAGE
TITLE 2: FIREPUMP

DWG UNITS: IN/LB/S	DRAWN BY: DAVE N					DATE: 18AUG2004
	APPD BY: -					DATE: -
EST WEIGHT: 42238.628	SCALE: 0.250	DO NOT SCALE	SHEET 1OF1	DRAWING NO: 9568	REV: A	

BILL OF MATERIAL

ITEM	QTY	DESCRIPTION	PART NUMBER
1	1	HOSE, WATER, 12 JIC BOTH ENDS, FIREPUMP	11148-04
2	1	BRKT, RAW WATER, 6-1/2" LG, FIREPUMP, 3/4" OR 1" PIPE	8905
3	1	BRACKET, RAW WATER COOLING, 4" LG, FIREPUMP, 3/4" OR 1" PIPE	9633
D 4	1	ELBOW, 3/4" NPT X JIC STEEL	11590
D 5	1	ADAPTER, 3/4" NPT X JIC STEEL	11591
6	1	NIPPLE, BLK, 3/4x6	71550
7	2	U-BOLT, FITS 1" PIPE	3201T13
8	1	NIPPLE, BLK, 3/4x9	BNFY

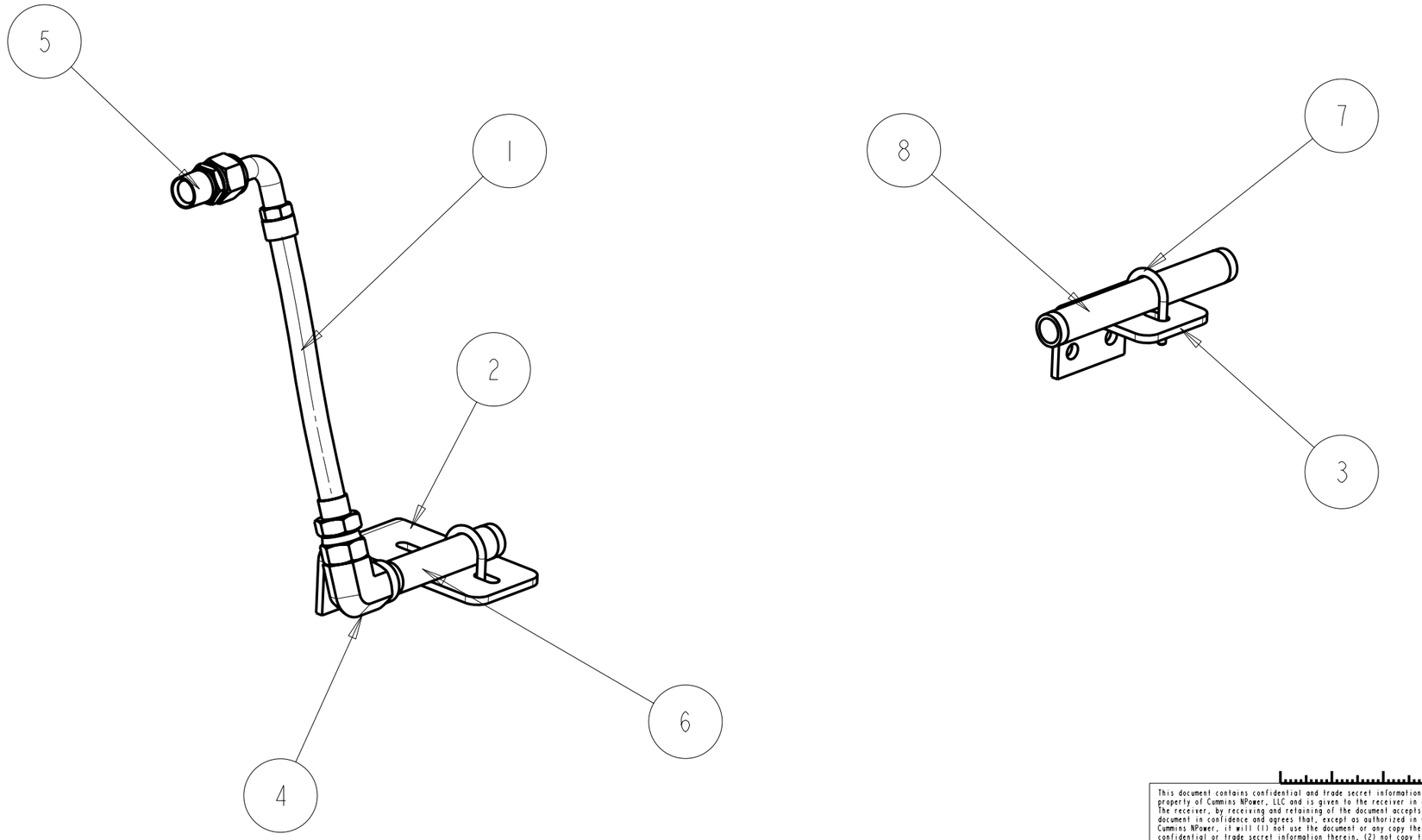

REV	DESCRIPTION OF REVISION	REV BY	DATE
D	P/N 11590 WAS 12_CTX-S & P/N 11591 WAS 12_FTX-S	JDT	15MAY07
C	REV PER FLEX CONNECTION	DAVE N	27NOV06
B	ADDED 9" NIPPLE	DAVE N	29APR05

This document contains confidential and trade secret information, is the property of Cummins NPower, LLC and is given to the receiver in confidence. The receiver, by receiving and retaining of the document accepts the document in confidence and agrees that, except as authorized in writing by Cummins NPower, it will (1) not use the document or any copy thereof or the confidential or trade secret information therein, (2) not copy the document, (3) not disclose to others either the document or the confidential or trade secret information therein, and (4) upon completion of the need to retain the document, or upon demand, return the document, all copies thereof, and all material copied therefrom. COPYRIGHT Cummins NPower, LLC

UNLESS OTHERWISE SPECIFIED ALL DIMENSION TOLERANCES ARE

ANGULAR DIMENSIONS ± 1°	IMPERIAL UNITS	METRIC UNITS
THIRD ANGLE PROJECTION	MACHINE TOLERANCES .XX = ± 0.010 .XXX = ± 0.005 FORM TOLERANCES .XX = ± 0.030 .XXX = ± 0.015 FAB TOLERANCES .XX = ± 0.060 .XXX = ± 0.030	MACHINE TOLERANCES .X = ± 0.4 .XX = ± 0.2 FORM TOLERANCES .X = ± 0.8 .XX = ± 0.4 FAB TOLERANCES .X = ± 1.5 .XX = ± 0.8

REF. SCALES

CUMMINS NPOWER, LLC
CORPORATE OFFICE
1600 BUERKLE ROAD
WHITE BEAR LAKE, MN
WWW.NPOWER.CUMMINS.COM

NPOWER SYSTEMS
DESIGN CENTER
875 LAWRENCE DRIVE
DEPERE, WISCONSIN

TITLE 1: MISC PIPING, RAW WATER, 6B
TITLE 2: FIREPUMP

DWG UNITS: IN/LB/S	DRAWN BY: DAVE N			DATE: 13OCT2004	
	APPD BY: -			DATE: -	
EST WEIGHT: 86.50I	SCALE: 0.250	DO NOT SCALE	SHEET 1OF1	DRAWING NO: 9634	REV: D

ITEM	QTY	DESCRIPTION	END FITTING	END FITTING	LENGTH "L"
01	A/R	CFP33 COOLING LOOP CONNECTION	90° SWIVEL	STRAIGHT SWIVEL	15"
02					
03	A/R	CFP39 COOLING LOOP CONNECTION	90° SWIVEL	STRAIGHT SWIVEL	13" A
04	A/R	CFP59 COOLING LOOP CONNECTION	90° SWIVEL	STRAIGHT SWIVEL	13" A
05	A/R	CFP6E CAC WATER CONNECTION	90° SWIVEL	STRAIGHT SWIVEL	35" A
06	A/R	CFP6E COOLING LOOP CONNECTION	45° SWIVEL A	STRAIGHT SWIVEL	48" A
07					
08	A/R	CFP5E & CFP7E LOOP CONNECTION	90° SWIVEL	STRAIGHT SWIVEL	38" B C

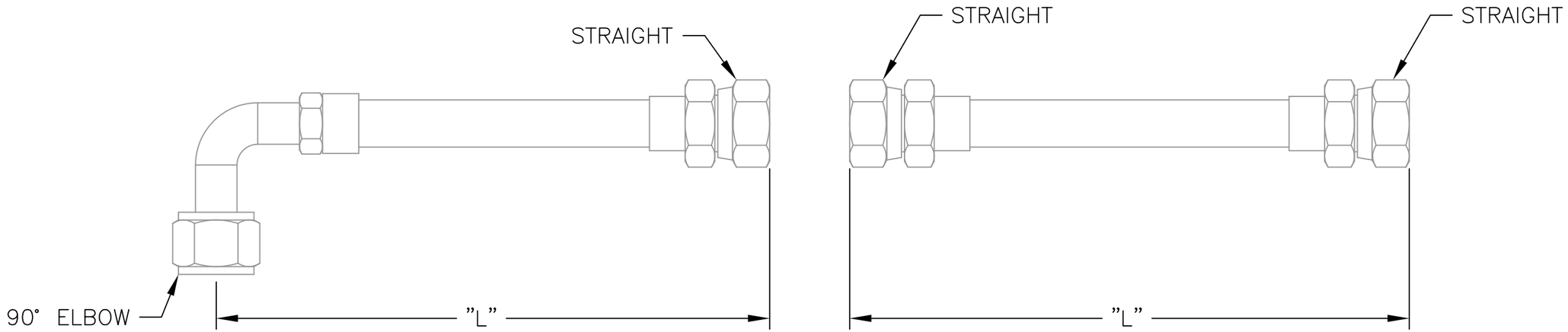

NOTES

1) FLEXIBLE HOSE RATING:
   - –250 PSI BURST
   - –WATER/SEA WATER @ TEMP 32°–120°
   - –ENVIORMENT MAY CONTAIN OIL, FUEL, OR ENGINE COOLANT
   - –ENVIORMENT TEMPERATURE UP TO 200°
2) END FITTINGS INSTALLED ON HOSE
3) EACH PIECE INDIVIDUALLY LABELED

REV	DESCRIPTION OF REVISION	BY	DATE
C	–08 WAS 30" LONG	DAN	06MAR2009
B	ADDED –08	DAN	23JAN2009
A	CHGD LENGTH TO BETTER FIT ASSEMBLY	JDT	18APR07

This document contains confidential and trade secret information, is the property of Cummins NPower, LLC and is given to the receiver in confidence. The receiver, by receiving and retaining of the document accepts the document in confidence and agrees that, except as authorized in writing by Cummins NPower, it will (1) not use the document or any copy thereof or the confidential or trade secret information therein, (2) not copy the document, (3) not disclose to others either the document or the confidential or trade secret information therein, and (4) upon completion of the need to retain the document, or upon demand, return the document, all copies thereof, and all material copied therefrom. COPYRIGHT Cummins NPower, LLC

UNLESS OTHERWISE SPECIFIED ALL DIMENSION TOLERANCES ARE

ANGULAR DIMENSIONS ± 1°

THIRD ANGLE PROJECTION

IMPERIAL UNITS	METRIC UNITS
MACHINE TOLERANCES .XX = ± 0.010 .XXX = ± 0.005	MACHINE TOLERANCES .X = ± 0.2 .XX = ± 0.2
FORM TOLERANCES .XX = ± 0.030 .XXX = ± 0.015	FORM TOLERANCES .X = ± 0.8 .XX = ± 0.4
FAB TOLERANCES .XX = ± 0.060 .XXX = ± 0.030	FAB TOLERANCES .X = ± 1.5 .XX = ± 0.8

REF. SCALES

Cummins NPower

CUMMINS NPOWER, LLC
CORPORATE OFFICE
1600 BUERKLE ROAD
WHITE BEAR LAKE, MN
WWW.NPOWER.CUMMINS.COM

NPOWER SYSTEMS
DESIGN CENTER
875 LAWRENCE DRIVE
DEPERE, WISCONSIN

HOSE, WATER, #12 37° JIC ENDS

DWG UNITS: IN\LB\S	DRAWN BY: DAVE N				DATE: 20DEC2006
	APPD BY:				DATE:
EST WEIGHT:	SCALE: NTS	DO NOT SCALE	SHEET 10F1	DRAWING NO: 11148	REV: C

BILL OF MATERIAL

ITEM	QTY	DESCRIPTION	PART NUMBER
1	1	KIT, FUEL SOLENOID OVERIDE	9699
2	1	FUEL PUMP, REFERENCE ONLY	FP99437

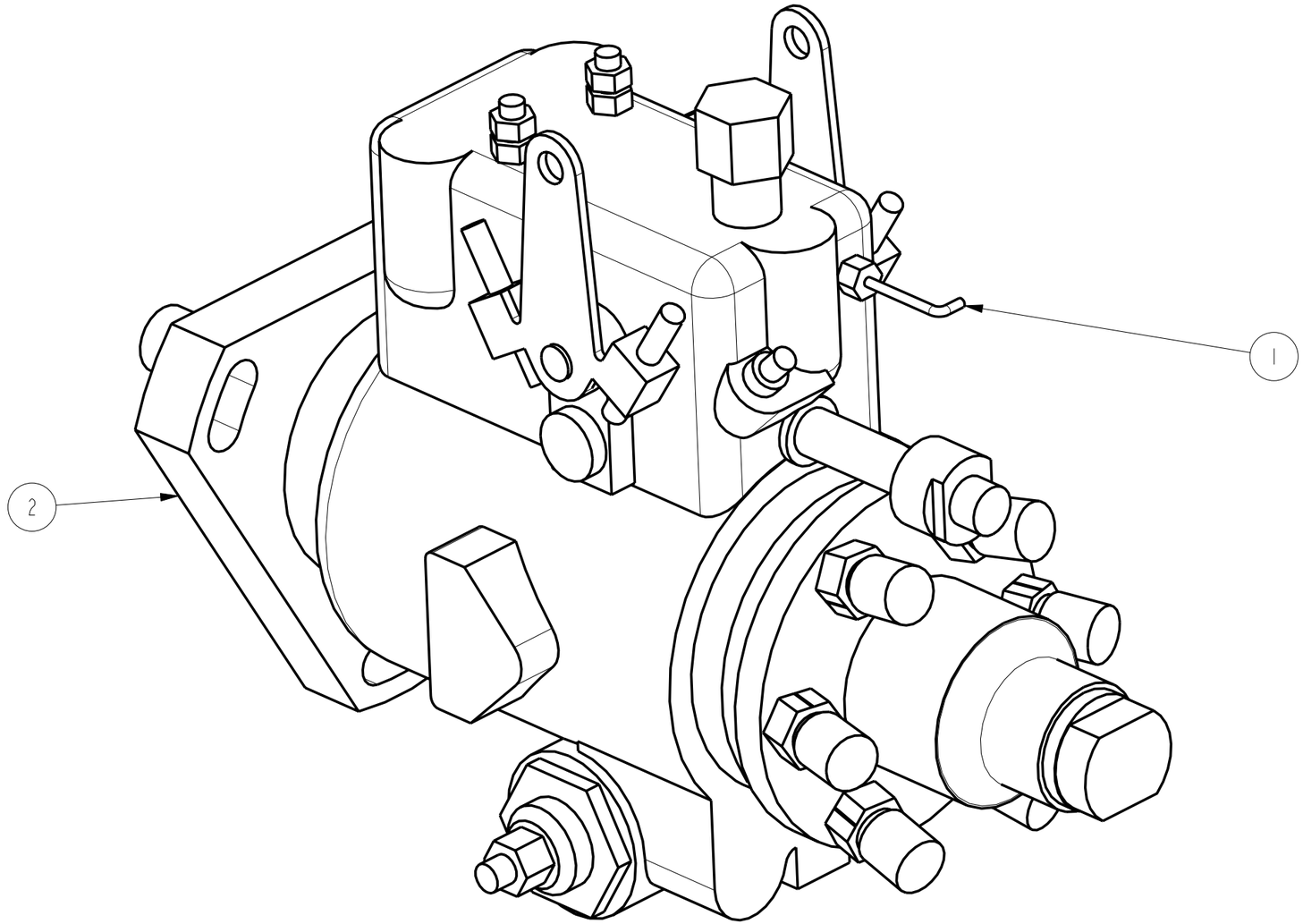

REV	DESCRIPTION OF REVISION	REV BY	DATE
A	CREATED DRAWING	DAVE N	08JUL05

ALL RIGHTS TO MANUFACTURE, COPY OR DISPOSE OF THIS DRAWING OR ITS CONTENTS ARE RESERVED UNLESS OTHERWISE SPECIFIED IN WRITING BY CUMMINS NPOWER, LLC

UNLESS OTHERWISE SPECIFIED
ALL DIMENSION TOLERANCES ARE

ANGULAR DIMENSIONS ± 1°

IMPERIAL UNITS	METRIC UNITS
MACHINE TOLERANCES .X = ± 0.06 .XX = ± 0.010 .XXX = ± 0.001 : WELD TOLERANCES .X = ± 0.25 .XX = ± 0.12 .XXX = ± 0.06	MACHINE TOLERANCES X = ± 1.5 X.X = ± 0.5 X.XX = ± 0.05 : WELDED TOLERANCES X = ± 5 X.X = ± 3 X.XX = ± 1.50

CUMMINS NPOWER, LLC
CORPORATE OFFICE
1600 BUERKLE ROAD
WHITE BEAR LAKE, MN
WWW.NPOWER.CUMMINS.COM

CUMMINS FIREPOWER
DESIGN CENTER
875 LAWRENCE DRIVE
DEPERE, WISCONSIN
CUMMINSFIREPOWER.COM

TITLE 1: KIT, FUEL SOLENOID OVERIDE
TITLE 2: FIREPUMP

DWG UNITS: IN/LB/S	DRAWN BY: DAVE N	DATE: MAR05
	APPD BY: -	DATE: -

EST WEIGHT: 42238.628	SCALE: 1.000	DO NOT SCALE	SHEET 1OF1	DRAWING NO: 9699	REV: A

BILL OF MATERIAL

ITEM	QTY	DESCRIPTION	PART NUMBER
1	1	THROTTLE CABLE, TURN LOCKING	R09D3-5X06
2	1	DECAL, FUEL SOLENOID OVERIDE (NOT SHOWN), FIREPUMP	9526-12
3	1	BRACKET, HANDLE, SOLENOID OVERIDE, FIREPUMP	9835
4	1	CHAIN, CONNECTING (NOT SHOWN) P/N 1250, FIREPUMP	CHAIN-1250

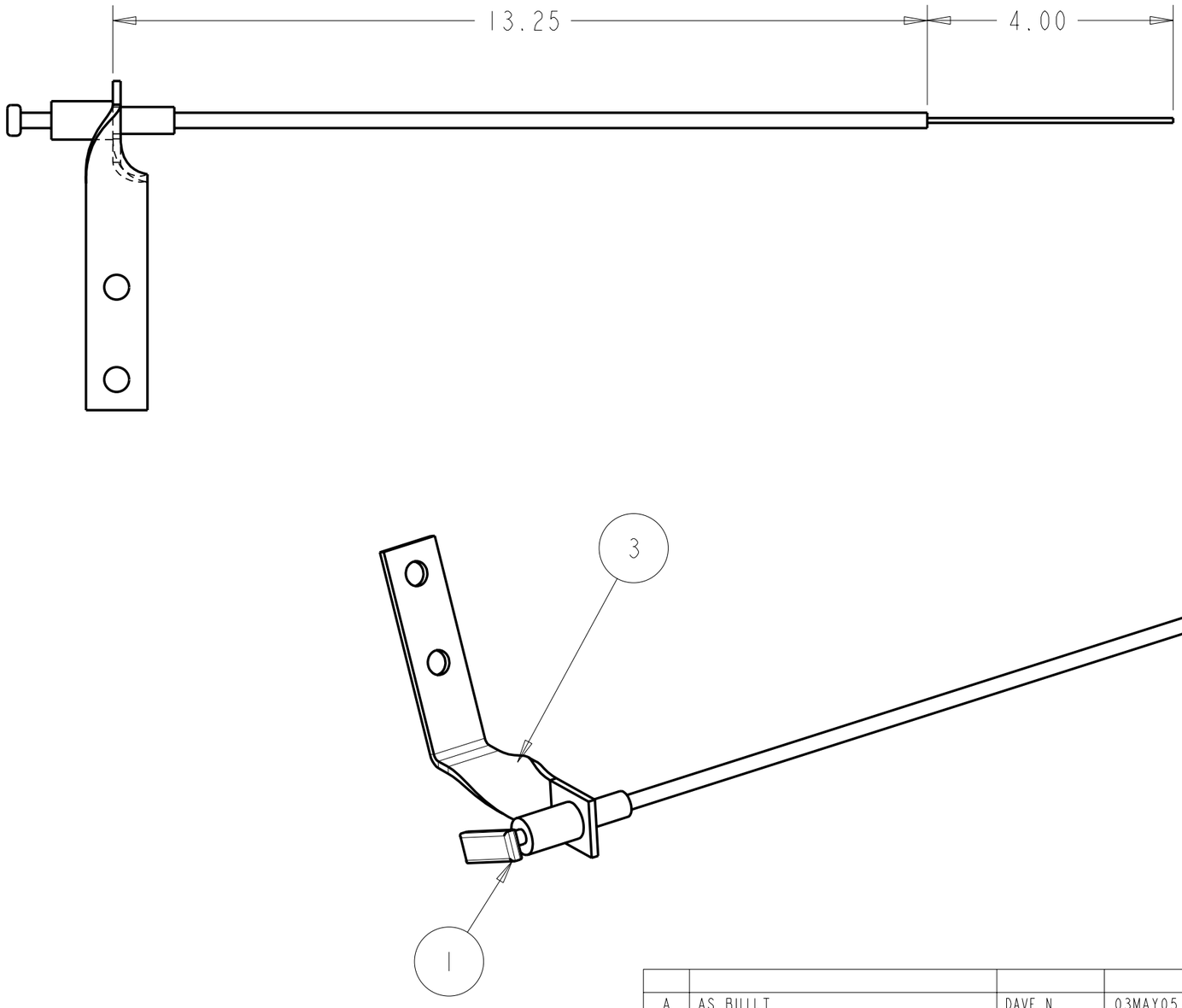

REV	DESCRIPTION OF REVISION	REV BY	DATE
A	AS BUILT	DAVE N	03MAY05

ALL RIGHTS TO MANUFACTURE, COPY OR DISPOSE OF THIS DRAWING OR ITS CONTENTS ARE RESERVED UNLESS OTHERWISE SPECIFIED IN WRITING BY CUMMINS NPOWER, LLC

UNLESS OTHERWISE SPECIFIED
ALL DIMENSION TOLERANCES ARE

ANGULAR DIMENSIONS ± 1°

IMPERIAL UNITS	METRIC UNITS
MACHINE TOLERANCES .X : ± 0.06 .XX : ± 0.010 .XXX : ± 0.001 - WELD TOLERANCES .X : ± 0.25 .XX : ± 0.12 .XXX : ± 0.06	MACHINE TOLERANCES X : ± 1.5 X.X : ± 0.5 X.XX : ± 0.05 - WELDED TOLERANCES X : ± 5 X.X : ± 3 X.XX : ± 1.50

CUMMINS NPOWER, LLC
CORPORATE OFFICE
1600 BUERKLE ROAD
WHITE BEAR LAKE, MN
WWW.NPOWER.CUMMINS.COM

NPOWER SYSTEMS
DESIGN CENTER
875 LAWRENCE DRIVE
DEPERE, WISCONSIN

TITLE 1: ASSEMBLY, SOLENOID OVERIDE
TITLE 2: FIREPUMP

DWG UNITS: IN/LB/S	DRAWN BY: DAVE N		DATE: 30APR05				
	APPD BY: -		DATE: -				
EST WEIGHT: 42238.628	SCALE: 0.500	DO NOT SCALE	SHEET 1OF1	DRAWING NO: 9839	REV: A		

BILL OF MATERIAL

ITEM	QTY	DESCRIPTION	PART NUMBER
1	1	FUEL LINE, #6-261 x 9.375" LG, -	10235_LINE
2	1	HOSE END, 20 SERIES, 1/4" NPT X #6 HOSE	20120-4-6
3	1	ADAPTER, HOSE, FEMALE JIC 45 DEG SWIVEL	20820-6-6

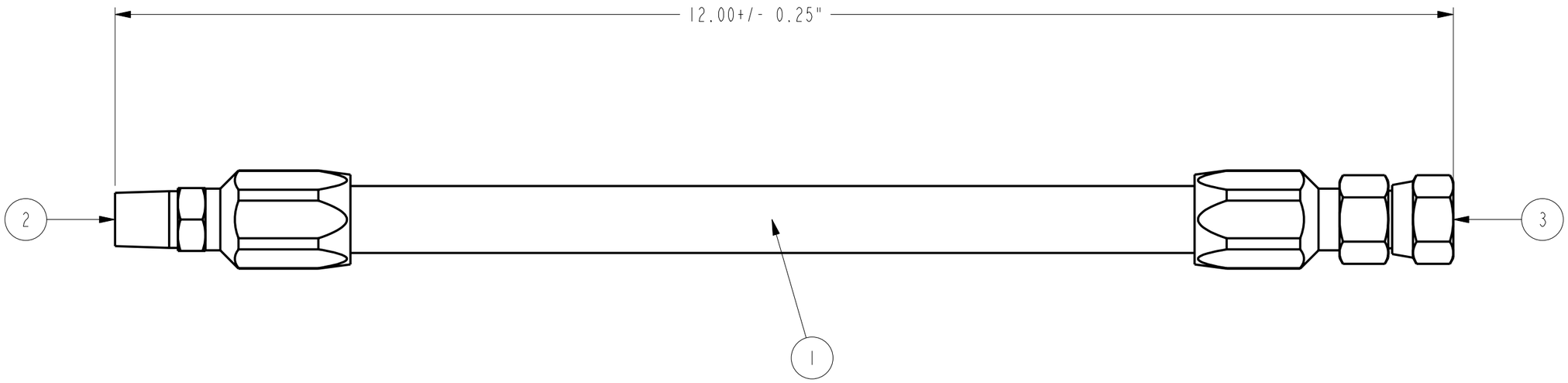

REV	DESCRIPTION OF REVISION	REV BY	DATE
A			

ALL RIGHTS TO MANUFACTURE, COPY OR DISPOSE OF THIS DRAWING OR ITS CONTENTS ARE RESERVED UNLESS OTHERWISE SPECIFIED IN WRITING BY CUMMINS NPOWER, LLC

CUMMINS NPOWER, LLC
CORPORATE OFFICE
1600 BUERKLE ROAD
WHITE BEAR LAKE, MN
WWW.NPOWER.CUMMINS.COM

CUMMINS FIREPOWER
DESIGN CENTER
875 LAWRENCE DRIVE
DEPERE, WISCONSIN
CUMMINSFIREPOWER.COM

UNLESS OTHERWISE SPECIFIED
ALL DIMENSION TOLERANCES ARE

ANGULAR DIMENSIONS ± 1°

IMPERIAL UNITS	METRIC UNITS
MACHINE TOLERANCES .X = ± 0.06 .XX = ± 0.010 .XXX = ± 0.001 - WELD TOLERANCES .X = ± 0.25 .XX = ± 0.12 .XXX = ± 0.06	MACHINE TOLERANCES X = ± 1.5 X.X = ± 0.5 X.XX = ± 0.05 - WELDED TOLERANCES X = ± 5 X.X = ± 3 X.XX = ± 1.50

TITLE 1: FUEL LINE, #6, 45 DEG FLARE X 1/4" NPT
TITLE 2: 12" LONG FLEX EXTENSION

DWG UNITS: IN/LB/S	DRAWN BY: DAVE N		DATE: 22JUL2005		
	APPD BY: -		DATE: -		
EST WEIGHT: 42238.628	SCALE: 1.000	DO NOT SCALE	SHEET 1OF1	DRAWING NO: 10235	REV:

ITEM	QTY	DESCRIPTION	MATERIAL
01	1	U-JOINT ADAPT, SAE#3, HAYES #127513-01	8614
02	1	DRIVE SHAFT, 1410	8617
03	1	COMPANION FLANGE, SEE WO FOR BORE	8606/7-__
04	1	ASSEMBLY, TELESOPING GUARD, CFP59	9494

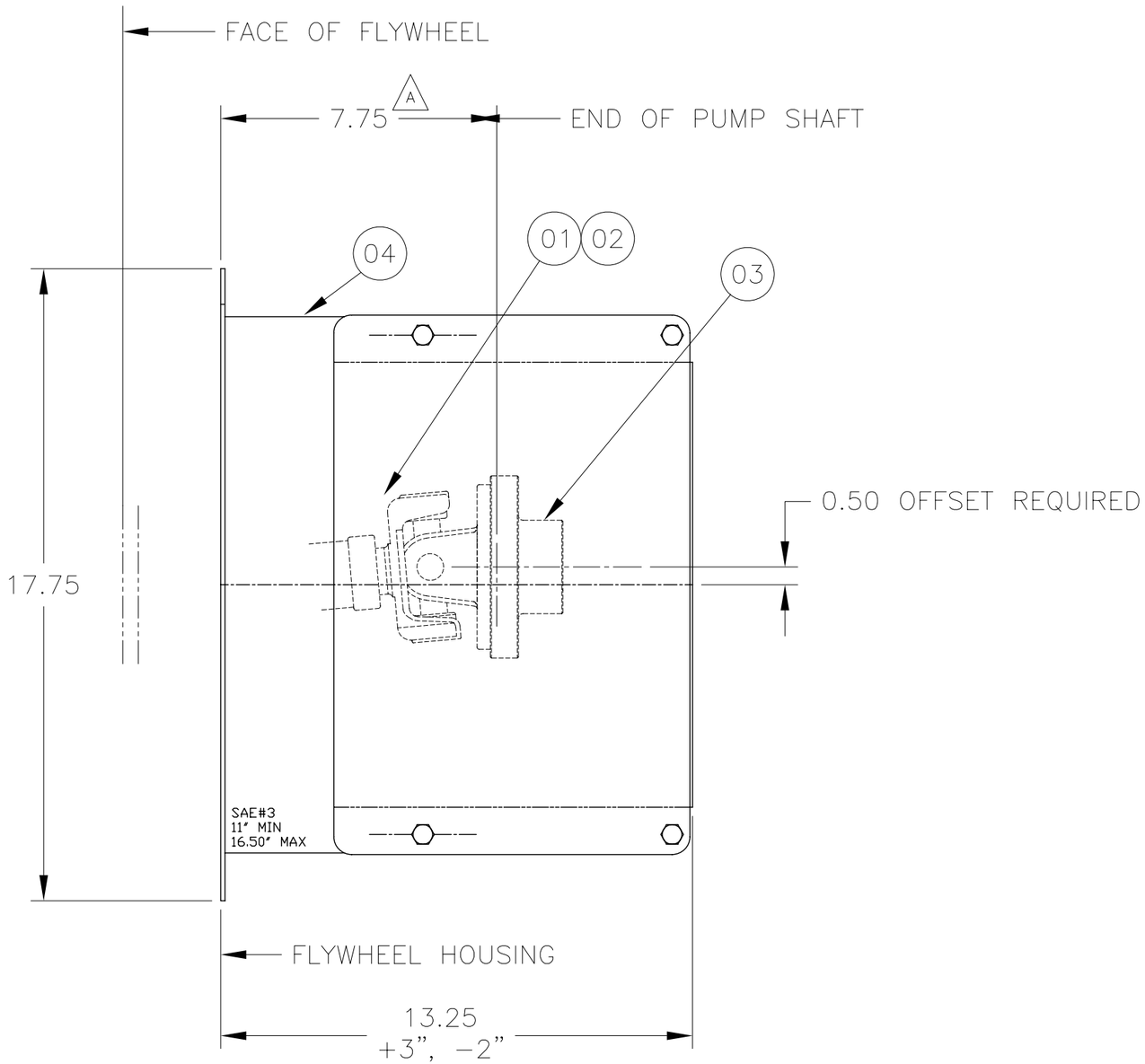

REV	DESCRIPTION OF REVISION	BY	DATE
A	7.74 WAS 7.25 PER 1410 MEAN LG OF 9.88"	JDT	10MAY07

ALL RIGHTS TO MANUFACTURE, COPY OR DISPOSE OF THIS DRAWING OR ITS CONTENTS ARE RESERVED UNLESS OTHERWISE SPECIFIED IN WRITING BY CUMMINS NPOWER, LLC

UNLESS OTHERWISE NOTED
-
ALL DIMENSIONS ARE IN INCHES
-
APPLY MACHINE TOLERANCES
.X = ± 0.06
.XX = ± 0.010
.XXX = ± 0.001
-
APPLY WELDED TOLERANCES
.X = ± 0.25
.XX = ± 0.12
.XXX = ± 0.06

Cummins Fire Power

CUMMINS NPOWER
CORPORATE OFFICE
1600 BUERKLE ROAD
WHITE BEAR LAKE, MN
WWW.NPOWER.CUMMINS.COM

CUMMINS FIRE POWER
DESIGN CENTER
875 LAWRENCE DRIVE
DEPERE, WISCONSIN
WWW.CUMMINSFIREPOWER.COM

DWG SCALE: 1/4	DRAWN BY: DAVE N	DATE: 20JUN2005
PLOT SCALE:	APPD BY:	DATE:

DESCRIPTION
ASSEMBLY, DRIVE SHAFT W/ GUARD

REFERENCE:	DRAWING NUMBER:
CFP59-83, 1410 DRIVE SHAFT	10164A

ITEM	QTY	DESCRIPTION	MATERIAL
01	1	U-JOINT ADAPT, SAE#3, HAYES #127513-02	8615
02	1	DRIVE SHAFT, 1480	8613
03	1	COMPANION FLANGE, SEE WO FOR BORE	8608-__
04	1	ASSEMBLY, TELESOPING GUARD, CFP59	9494

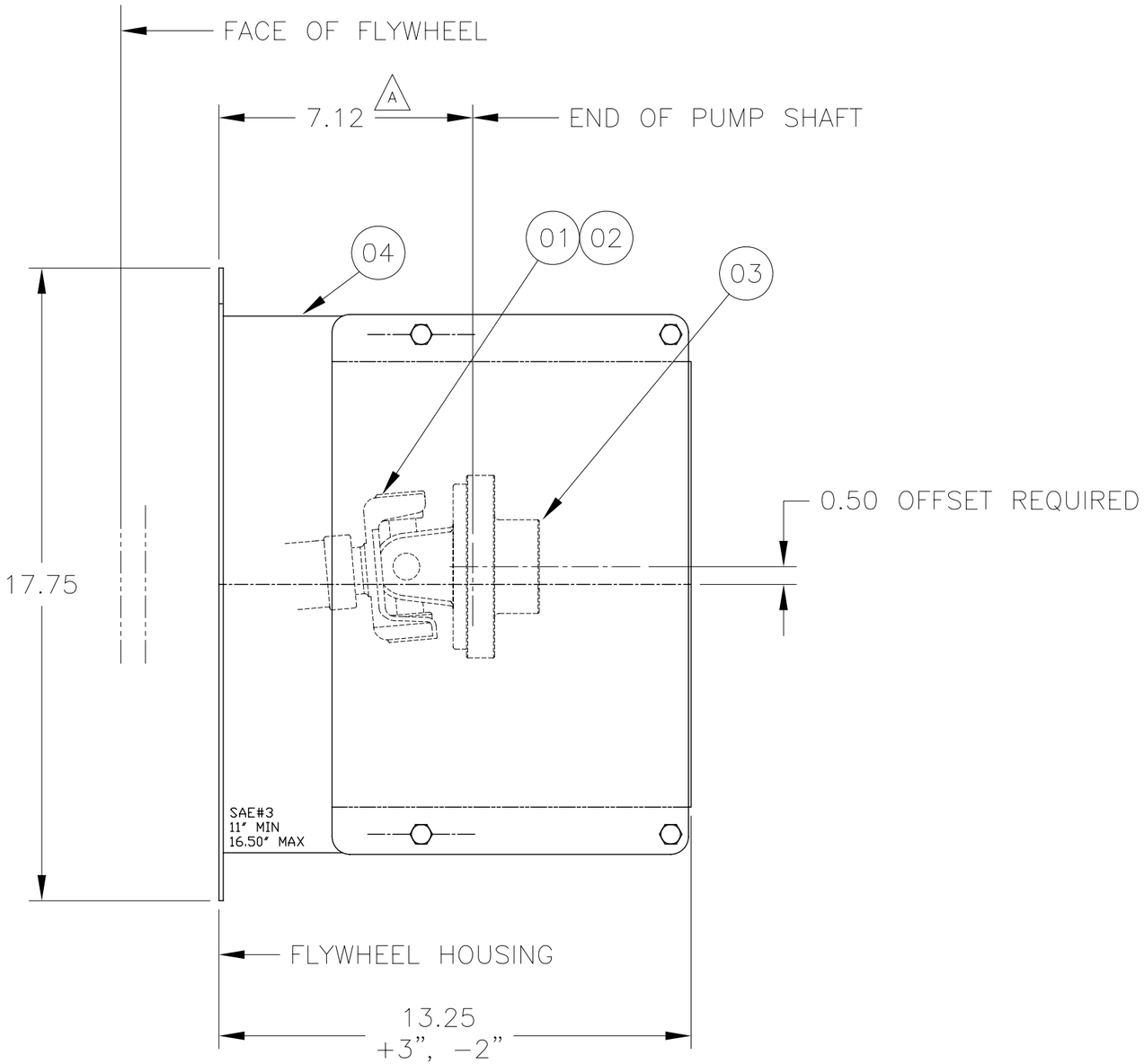

REV	DESCRIPTION OF REVISION	BY	DATE
A	7.12 WAS 7.25 PER 1480 MEAN LG OF 9.00"	JDT	10MAY07

ALL RIGHTS TO MANUFACTURE, COPY OR DISPOSE OF THIS DRAWING OR ITS CONTENTS ARE RESERVED UNLESS OTHERWISE SPECIFIED IN WRITING BY CUMMINS NPOWER, LLC

UNLESS OTHERWISE NOTED
-
ALL DIMENSIONS ARE IN INCHES
-
APPLY MACHINE TOLERANCES
.X = ± 0.06
.XX = ± 0.010
.XXX = ± 0.001
-
APPLY WELDED TOLERANCES
.X = ± 0.25
.XX = ± 0.12
.XXX = ± 0.06

Cummins Fire Power
CUMMINS NPOWER
CORPORATE OFFICE
1600 BUERKLE ROAD
WHITE BEAR LAKE, MN
WWW.NPOWER.CUMMINS.COM

CUMMINS FIRE POWER
DESIGN CENTER
875 LAWRENCE DRIVE
DEPERE, WISCONSIN
WWW.CUMMINSFIREPOWER.COM

DWG SCALE: 1/4	DRAWN BY: DAVE N	DATE: 20JUN2005
PLOT SCALE:	APPD BY:	DATE:

DESCRIPTION
ASSEMBLY, DRIVE SHAFT W/ GUARD

REFERENCE:
CFP59-83, 1480 DRIVE SHAFT

DRAWING NUMBER:
10165A

BILL OF MATERIAL

ITEM	QTY	DESCRIPTION	PART NUMBER
1	1	GUARD, STUB SHAFT, SAE #3 FLYWHEEL, FIREPUMP	8611
2	1	STUB SHAFT, SAE #3 FLYWHEEL, hAYES #127396, FIREPUMP	9552
3	4	SCREW, CAP, HEX HEAD, M10 x 20	HHCS_M10_20
4	4	SCREW, CAP, HEX HEAD, M10 x 50	HHCS_M16_50

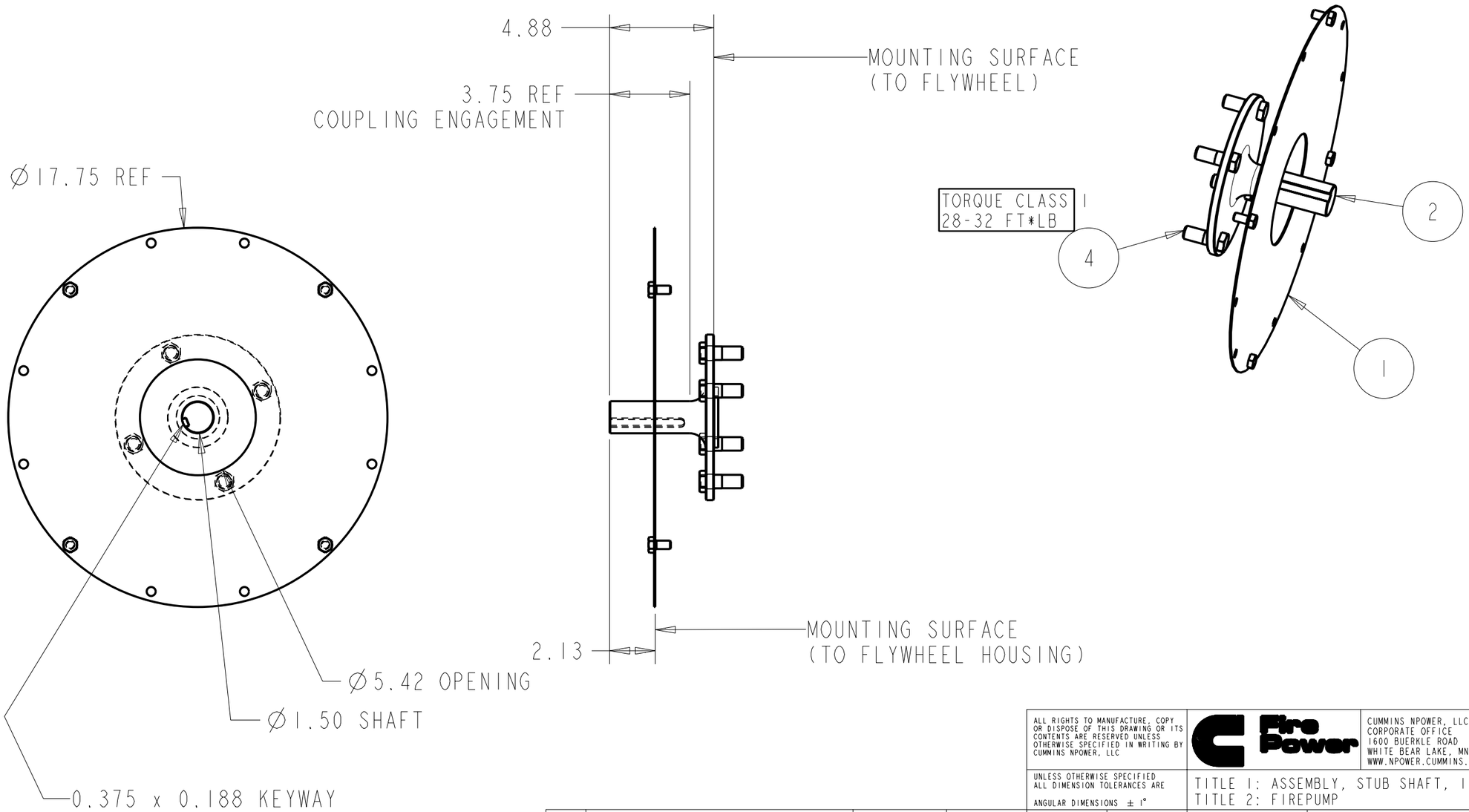

ALL RIGHTS TO MANUFACTURE, COPY OR DISPOSE OF THIS DRAWING OR ITS CONTENTS ARE RESERVED UNLESS OTHERWISE SPECIFIED IN WRITING BY CUMMINS NPOWER, LLC

UNLESS OTHERWISE SPECIFIED
ALL DIMENSION TOLERANCES ARE

ANGULAR DIMENSIONS ± 1°

CUMMINS NPOWER, LLC
CORPORATE OFFICE
1600 BUERKLE ROAD
WHITE BEAR LAKE, MN
WWW.NPOWER.CUMMINS.COM

CUMMINS FIREPOWER
DESIGN CENTER
875 LAWRENCE DRIVE
DEPERE, WISCONSIN
CUMMINSFIREPOWER.COM

TITLE 1: ASSEMBLY, STUB SHAFT, 1.50" DIA
TITLE 2: FIREPUMP

REV	DESCRIPTION OF REVISION	REV BY	DATE
B1	CORRECTED TORQUE	DAVE N	20JUN05
B	GUARD WAS 9553	DAVE N	20JAN05
AA	ADDED HARDWARE	DAVE N	21OCT04

IMPERIAL UNITS
MACHINE TOLERANCES
.X = ± 0.06
.XX = ± 0.010
.XXX = ± 0.001
WELD TOLERANCES
.X = ± 0.25
.XX = ± 0.12
.XXX = ± 0.06

METRIC UNITS
MACHINE TOLERANCES
X = ± 1.5
X.X = ± 0.5
X.XX = ± 0.05
WELDED TOLERANCES
X = ± 5
X.X = ± 3
X.XX = ± 1.50

DWG UNITS: IN/LB/S	DRAWN BY: DAVE N		DATE: 16SEP2004		
	APPD BY: -		DATE: -		
EST WEIGHT: 42238.628	SCALE: 0.200	DO NOT SCALE	SHEET 1OF1	DRAWING NO: 8618	REV: B

BILL OF MATERIAL

ITEM	QTY	DESCRIPTION	PART NUMBER
1	1	GUARD, STUB SHAFT, SAE #3 FLYWHEEL, FIREPUMP	8611
2	1	STUB SHAFT, SAE #3 FLYWHEEL, HAYES #, FIREPUMP	9624
3	4	SCREW, CAP, HEX HEAD, M10 x 20	HHCS_M10_20
4	4	SCREW, CAP, HEX HEAD, M10 x 50	HHCS_M16_50

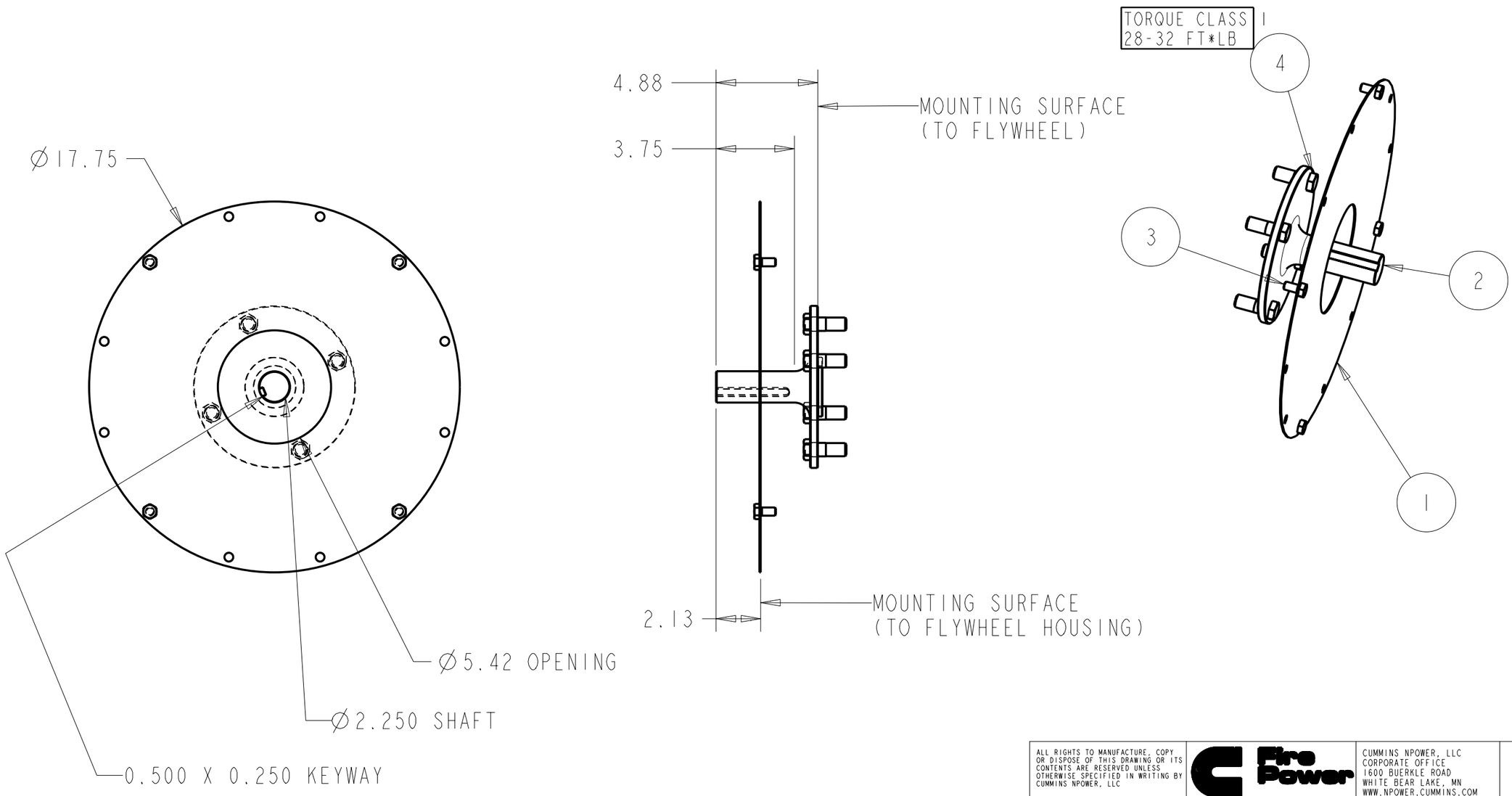

REV	DESCRIPTION OF REVISION	REV BY	DATE
B1	CORRECTED TORQUE	DAVE N	20JUN05
B	GUARD WAS 9553	DAVE N	20JAN05
A	ADDED HARDWARE	DAVE N	21OCT04

ALL RIGHTS TO MANUFACTURE, COPY OR DISPOSE OF THIS DRAWING OR ITS CONTENTS ARE RESERVED UNLESS OTHERWISE SPECIFIED IN WRITING BY CUMMINS NPOWER, LLC

UNLESS OTHERWISE SPECIFIED
ALL DIMENSION TOLERANCES ARE

ANGULAR DIMENSIONS ± 1°

IMPERIAL UNITS	METRIC UNITS
MACHINE TOLERANCES .X : ± 0.06 .XX : ± 0.010 .XXX : ± 0.001 WELD TOLERANCES X : ± 0.25 .XX : ± 0.12 .XXX : ± 0.06	MACHINE TOLERANCES X : ± 1.5 X.X : ± 0.5 X.XX : ± 0.05 WELDED TOLERANCES X : ± 5 X.X : ± 3 X.XX : ± 1.50

Fire Power
CUMMINS NPOWER, LLC
CORPORATE OFFICE
1600 BUERKLE ROAD
WHITE BEAR LAKE, MN
WWW.NPOWER.CUMMINS.COM

CUMMINS FIREPOWER
DESIGN CENTER
875 LAWRENCE DRIVE
DEPERE, WISCONSIN
CUMMINSFIREPOWER.COM

TITLE 1: ASSEMBLY, STUB SHAFT, 2.25" DIA
TITLE 2: FIREPUMP

DWG UNITS: IN/LB/S	DRAWN BY: DAVE N		DATE: 15OCT2004
	APPD BY: -		DATE: -
EST WEIGHT: 42238.628	SCALE: 0.200	DO NOT SCALE	SHEET 1OF1
	DRAWING NO: 8619		REV: B

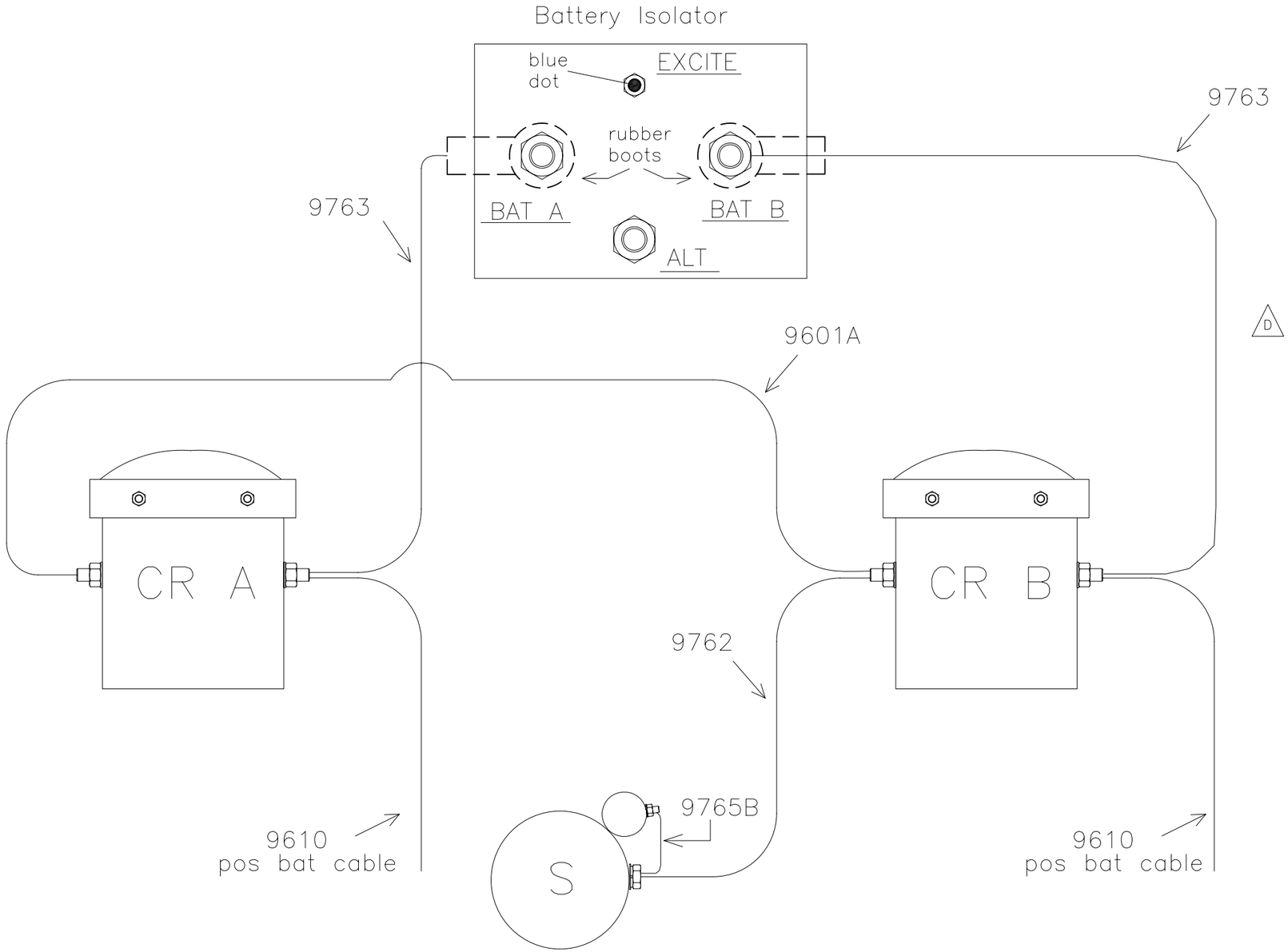

P/N	DESCRIPTION	QTY
9601A	Cable, Battery Contactor Jumper	1
9762A	Cable, Contactor to Starter	1
△D 9763B	Cable, Isolator to Battery	2
9764	Wire, FSO Connector	1
9765B	Wire, Starter Solenoid Jumper	1
9609	Battery Cable Kit (optional)	1

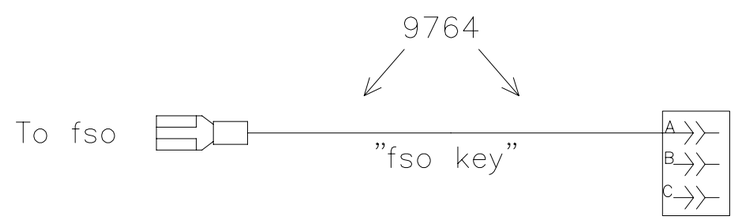

REV	DESCRIPTION OF REVISION	BY	DATE
D	CHANGED P/N 9763 TO REV B	RJS	6 NOV 06
C	CHANGED P/N 9765 TO REV B	RJS	25 JULY 06
B	P/N 9601 CHG'D TO REV A	RJS	30 NOV 05
A2	MOVED THE CR A–TO–CR B JUMPER	]RJS	2 JULY 05
A1	ADDED REV # TO THE P/N'S	RJS	17 JUNE 05
A	ADDED WIRING DIAGRAM	RJS	5 JAN 05

ALL RIGHTS TO MANUFACTURE, COPY OR DISPOSE OF THIS DRAWING OR ITS CONTENTS ARE RESERVED UNLESS OTHERWISE SPECIFIED IN WRITING BY CUMMINS NPOWER, LLC

UNLESS OTHERWISE NOTED
–
ALL DIMENSIONS ARE IN INCHES
–
APPLY MACHINE TOLERANCES
.X = ± 0.06
.XX = ± 0.010
.XXX = ± 0.001
–
APPLY WELDED TOLERANCES
.X = ± 0.25
.XX = ± 0.12
.XXX = ± 0.06

CUMMINS NPOWER
CORPORATE OFFICE
1600 BUERKLE ROAD
WHITE BEAR LAKE, MN
WWW.NPOWER.CUMMINS.COM

NPOWER SYSTEMS
DESIGN CENTER
875 LAWRENCE DRIVE
DEPERE, WISCONSIN

DWG SCALE:	DRAWN BY: RJS	DATE: 6 DEC 2004
PLOT SCALE:	APPD BY:	DATE:

DESCRIPTION
KIT, LOOSE WIRES

REFERENCE:	DRAWING NUMBER:
4B, 6B, 6C, QSB, & QSC	9767_D

SAE #3	FLYWHEEL HOUSING
1/4" NPT	FUEL SUPPLY
1/4" NPT	FUEL RETURN
3/4" NPT	RAW WATER SUPPLY
1" NPT	RAW WATER RETURN
115v. PLUG	COOLANT HEATER
3" DIA.	EXHAUST CONNECTION

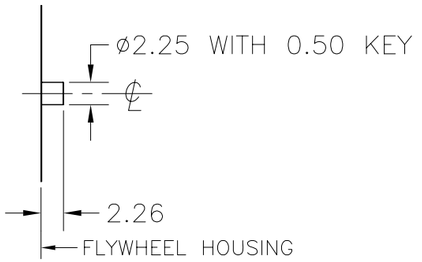

STUB SHAFT & GUARD

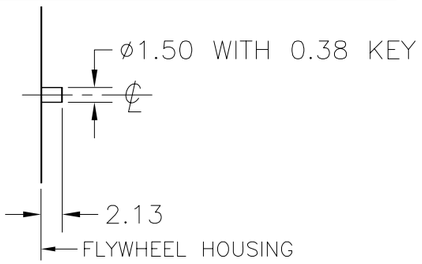

STUB SHAFT & GUARD

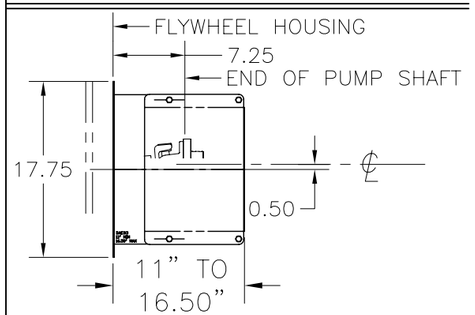

1480 DRIVE SHAFT & GUARD

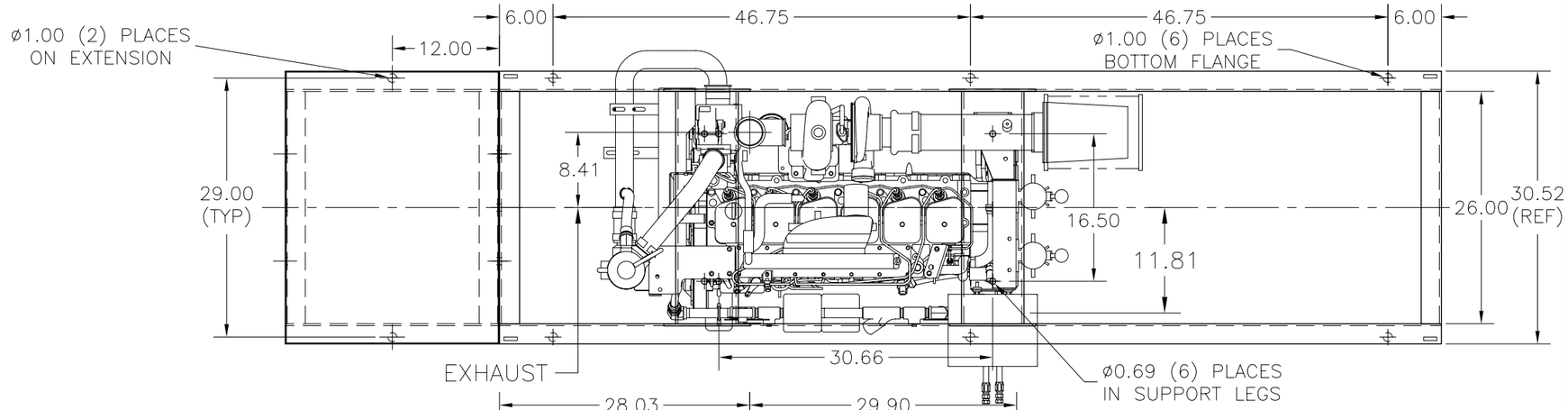

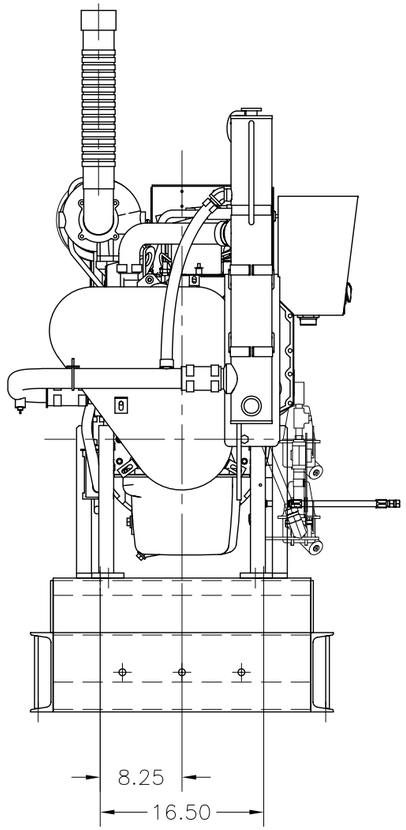

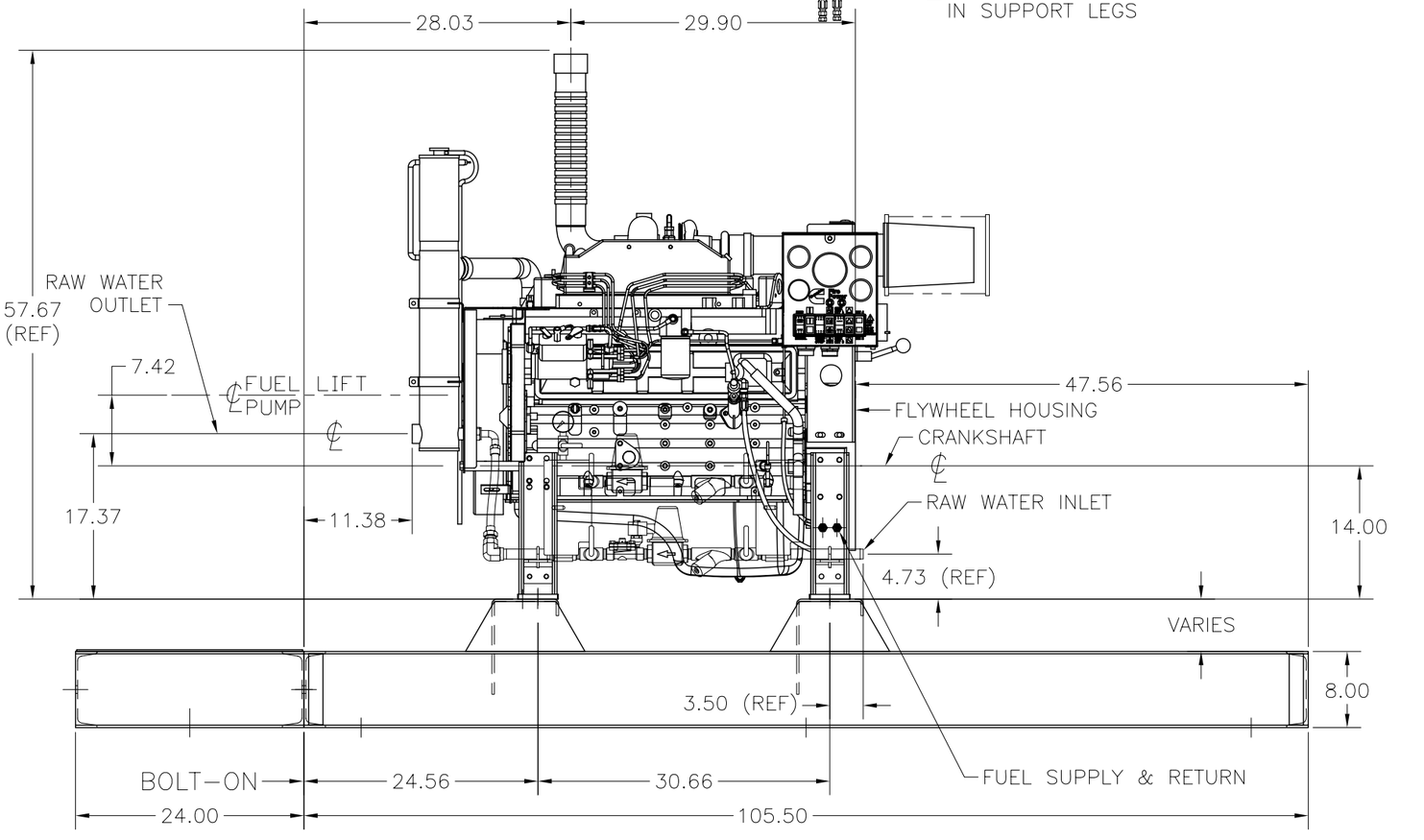

NOTES

1) DETAILS REMOVED FOR CLARITY
2) OPTIONAL COMPONENTS SHOWN
3) SUBJECT TO CHANGE WITHOUT NOTICE
4) LEG EXTENSION LENGTH DETERMINED BY PUMP SIZE
5) SEE ASSEMBLY DRAWING AND DATA SHEET FOR ADDITIONAL INFORMATION
6) DRIVE SHAFT MUST NOT RUN AT 0° ANGLE

REV	DESCRIPTION OF REVISION	BY	DATE
D	GRAPHICS UPDATE	DAN	12JAN2007

ALL RIGHTS TO MANUFACTURE, COPY OR DISPOSE OF THIS DRAWING OR ITS CONTENTS ARE RESERVED UNLESS OTHERWISE SPECIFIED IN WRITING BY CUMMINS NPOWER, LLC

UNLESS OTHERWISE NOTED
–
ALL DIMENSIONS ARE IN INCHES
–
APPLY MACHINE TOLERANCES
.X = ± 0.06
.XX = ± 0.010
.XXX = ± 0.001
–
APPLY WELDED TOLERANCES
.X = ± 0.25
.XX = ± 0.12
.XXX = ± 0.06

Cummins Fire Power

CUMMINS NPOWER
CORPORATE OFFICE
1600 BUERKLE ROAD
WHITE BEAR LAKE, MN
WWW.NPOWER.CUMMINS.COM

CUMMINS FIRE POWER
DESIGN CENTER
875 LAWRENCE DRIVE
DEPERE, WISCONSIN
WWW.CUMMINSFIREPOWER.COM

DWG SCALE: 1/16	DRAWN BY: CNP	DATE: OCT2004
PLOT SCALE:	APPD BY:	DATE:

DESCRIPTION
GENERAL LAYOUT, FIREPUMP, CFP5.9

REFERENCE:	DRAWING NUMBER:
WET TURBO	CFP59-F55_GEN

SAE #3	FLYWHEEL HOUSING
1/4" NPT	FUEL SUPPLY
1/4" NPT	FUEL RETURN
3/4" NPT	RAW WATER SUPPLY
1" NPT	RAW WATER RETURN
115v. PLUG	COOLANT HEATER
3" DIA.	EXHAUST CONNECTION

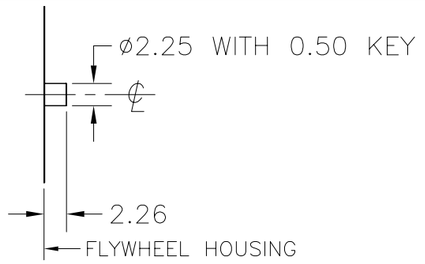

STUB SHAFT & GUARD

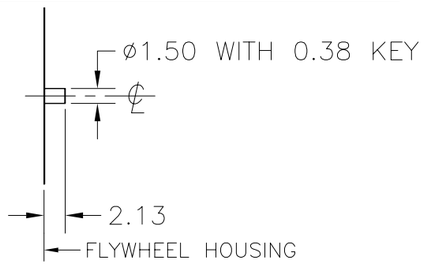

STUB SHAFT & GUARD

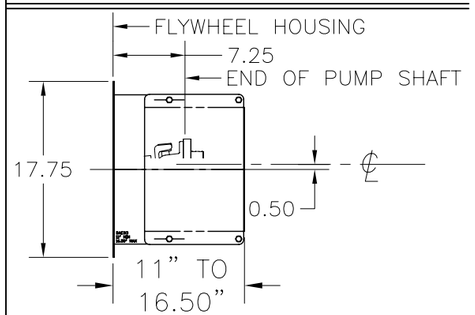

1480 DRIVE SHAFT & GUARD

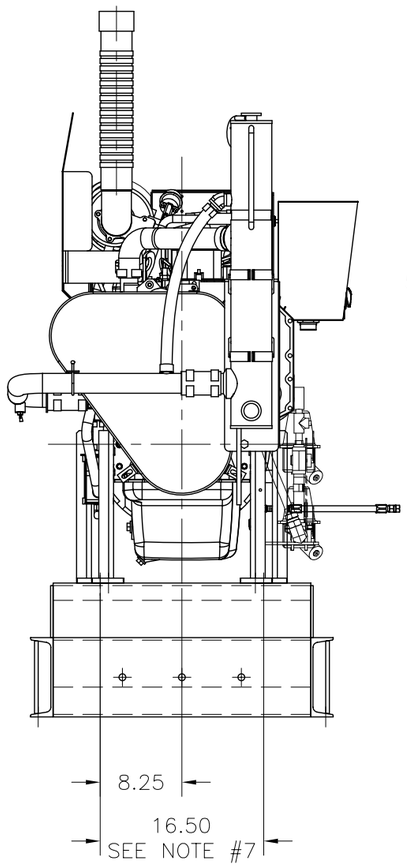

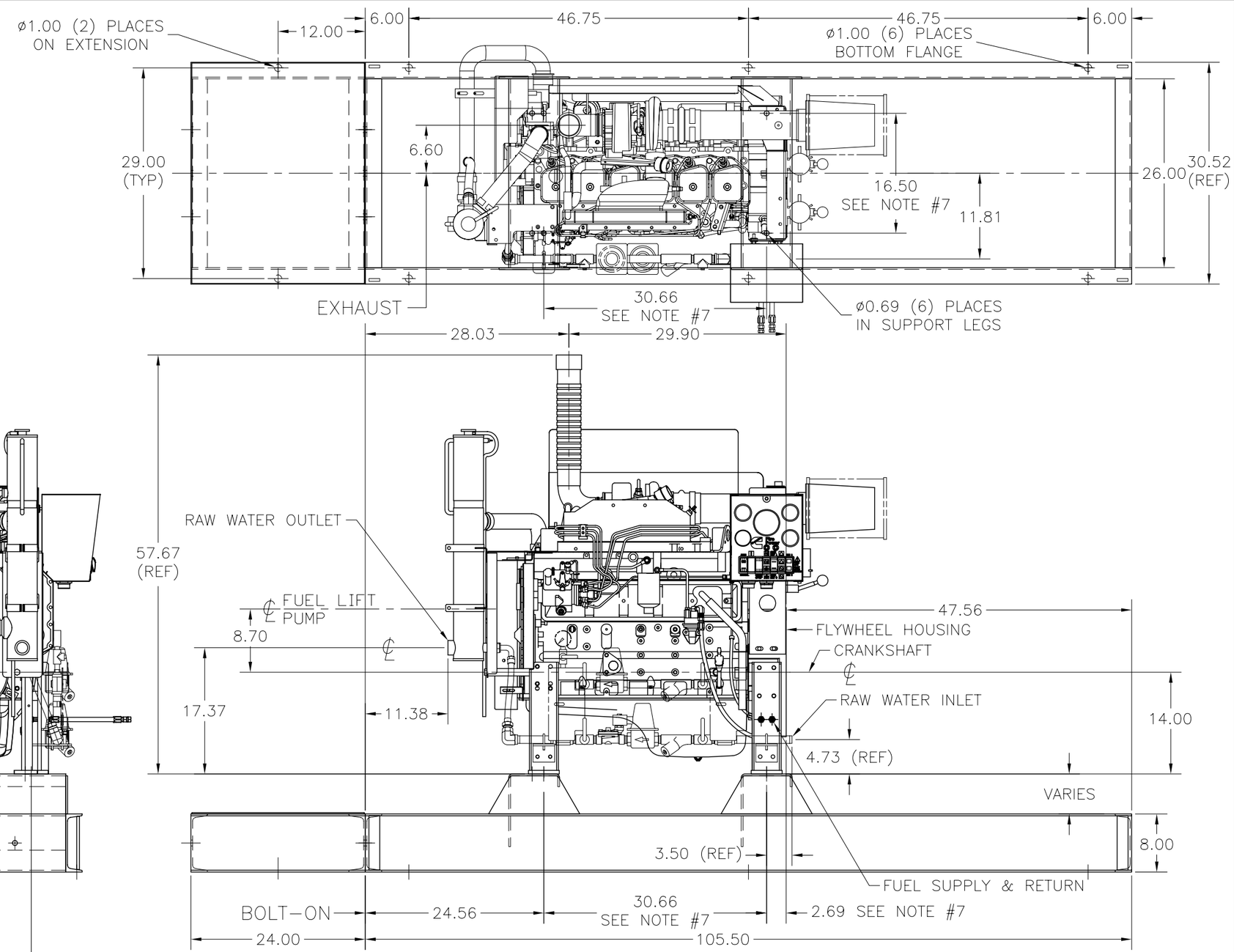

NOTES

1) DETAILS REMOVED FOR CLARITY
2) OPTIONAL COMPONENTS SHOWN
3) SUBJECT TO CHANGE WITHOUT NOTICE
4) LEG EXTENSION LENGTH DETERMINED BY PUMP SIZE
5) SEE ASSEMBLY DRAWING AND DATA SHEET FOR ADDITIONAL INFORMATION
6) DRIVE SHAFT MUST NOT RUN AT 0° ANGLE
7) DIMENSIONS AS NOTED CERTIFIED FOR MOUNTING ±0.13"

REV	DESCRIPTION OF REVISION	BY	DATE
E	GRAPHICS UPDATE	DAVE N	12JAN2007

ALL RIGHTS TO MANUFACTURE, COPY OR DISPOSE OF THIS DRAWING OR ITS CONTENTS ARE RESERVED UNLESS OTHERWISE SPECIFIED IN WRITING BY CUMMINS NPOWER, LLC

UNLESS OTHERWISE NOTED
–
ALL DIMENSIONS ARE IN INCHES
–
APPLY MACHINE TOLERANCES
.X = ± 0.06
.XX = ± 0.010
.XXX = ± 0.001
–
APPLY WELDED TOLERANCES
.X = ± 0.25
.XX = ± 0.12
.XXX = ± 0.06

Cummins Fire Power

CUMMINS NPOWER
CORPORATE OFFICE
1600 BUERKLE ROAD
WHITE BEAR LAKE, MN
WWW.NPOWER.CUMMINS.COM

CUMMINS FIRE POWER
DESIGN CENTER
875 LAWRENCE DRIVE
DEPERE, WISCONSIN
WWW.CUMMINSFIREPOWER.COM

DWG SCALE: 1/16	DRAWN BY: CNP	DATE: NOV2004
PLOT SCALE:	APPD BY:	DATE:

DESCRIPTION
GENERAL LAYOUT, FIREPUMP, CFP59

REFERENCE:

DRAWING NUMBER:
CFP59_GEN

BATTERY A+
PIN 16
RED/YLW
BATT A+
10AWG
CB 1
(30A)
RED/YLW VM A
RED/YLW
FUSED A+
TB 6
BATTERY B+
PIN 18
RED/ORNG
BATT B+
CB 2
(30A)
RED/ORNG VM B
NEGATIVE TO GND
PIN 14
BLACK
VOLTMETER BAT A
VOLTMETER BAT B
BEST BATTERY DIODE BLOCK
RED/ORNG
FUSED B+
TB 8
RED BAT POS
PIN 12
SWITCHED B+
SIGNAL PWR
PURPLE
PIN 17
PIN 13
RAW
RAW WATER SOLENOID
TB 1
ORANGE
AUTO
MANUAL
SW PWR
K1
TACH
GRAY/RED MPU +
WATER TEMP GUAGE
WHITE WTG
PIN 5
WATER TEMP SENDER
OIL PRESS GUAGE
WHITE OPG
PIN 4
OIL PRESS SENDER
HIGH WATER TEMP LAMP
WHITE HWTL
D1
TB 5
PIN 7
HI WTR TEMP SW.
LOW OIL PRESS LAMP
WHITE LOPL
D2
TB 4
LO OIL PRESS SW
PIN 6
NEG
NEGATIVE SPLICE BLOCK
PIN G
TB 11
SIGNAL POWER SPLICE BLOCK
SIGNAL POWER TO SHT 3
RESET/STOP
SIGNAL PWR
DS PWR
PURPLE
PUR/WH
OVERSPEED SWITCH
POWER
OVERSPEED
WHITE
OVERSPEED LAMP
D3
TB 3
NEG
NEGATIVE SPLICE BLOCK
NEG TO SHT 3
PINK FSD/KEY
PIN X
KEY SWITCH (ELECTRONIC ENGINES)
PIN 3
FUEL SHUT-OFF (MECHANICAL ENGINES)
FOR FIREPUMP MODEL CFP59-F55, REF DWG 9926 FOR CUMMINS FIREPOWER-INSTALLED POWER-TO-STOP TIMER RELAY
CRANK
WHT
CRANK TERM
RELAY K2/TERM 86 (SEE SHEET 2)
D4
TB 2
REPLACEABLE DIODE
EXCITE
PIN 9
TO ALTERNATOR EXCITE
CRANK A
CRANK B
MANUAL CRANK BAT A
MANUAL CRANK BAT B
AUTO CRANK A
AUTO CRANK B
TB 9
TB 10
YELLOW
ORANGE
CRANK 'A' SOLENOID
CRANK 'B' SOLENOID
PIN 8
PIN 10
PIN 2
GRAY/BLK
MPU -
TO MAG PICK-UP
PIN 1
GRAY/RED
MPU +
MAG PICK-UP

TERMINAL BLOCK TB

CUSTOMER'S CONNECTIONS: WIRES SHALL BE 14AWG MIN.

ORANGE / AUTO	1	FIRE PUMP CONTROLLER SWITCHED B+
CRANK TERM	2	CRANK TERMINATE SIGNAL
OVERSPEED	3	OVERSPEED ALARM SIGNAL
LOPL	4	LOW OIL PRESSURE ALARM SIGNAL
HWTL	5	HIGH TEMP ALARM SIGNAL
RED/YLW FUSED A+	6	BATTERY 'A' + (BATTERY CHARGER)
	7	
RED/ORNG FUSED B+	8	BATTERY 'B' + (BATTERY CHARGER)
AUTO CRANK A	9	CRANK BATTERY 'A'
AUTO CRANK B	10	CRANK BATTERY 'B'
BLACK	11	GROUND
	12	
	301	
	302	
	303	

SIGNALS ARE ACTIVE HI (12 VOLTS)

SIGNALS ARE ACTIVE LOW (GND)

ELECTRONIC ENGINES ONLY SEE THIS DWG., SHT 2

NOTES:
WIRE IS 14 AWG UNLESS OTHERWISE NOTED
RED TEXT = WIRE TAG
GREEN TEXT = WIRE COLOR
WIRE COLOR IS WHITE UNLESS OTHERWISE NOTED
D1 - D4: 6 Amp/400 Vpiv

REV	DESCRIPTION OF REVISION	BY	DATE
E	ADDED SHEETS 3, 4, 5, & 6	RJS	20 MAR 07
D	PIN 12 WAS PIN B	RJS	19 SEPT 06
C	REMOVED 5 AMP CIRCUIT BREAKER	RJS	27 JUNE 06
B	ADDED CONNECTION TO TERM 6 OF SPEED SWITCH	RJS	17 DEC 05
A	CHANGED WIRE GAUGES; CHG'D TB 1 LABELS	RJS	27OCT05

ALL RIGHTS TO MANUFACTURE, COPY OR DISPOSE OF THIS DRAWING OR ITS CONTENTS ARE RESERVED UNLESS OTHERWISE AGREED TO IN WRITING BY CUMMINS NPOWER, LLC

UNLESS OTHERWISE NOTED
ALL DIMENSIONS ARE IN INCHES
APPLY MACHINE TOLERANCES
.X = ± 0.05
.XX = ± 0.010
.XXX = ± 0.001
APPLY WELDED TOLERANCES
.X = ± 0.25
.XX = ± 0.13
.XXX = ± 0.05

Fire Power

CUMMINS NPOWER CORPORATE OFFICE 1600 BUERKLE ROAD WHITE BEAR LAKE, MN WWW.NPOWER.CUMMINS.COM

CUMMINS FIRE POWER DESIGN CENTER 875 LAWRENCE DRIVE DEPERE, WISCONSIN WWW.CUMMINSFIREPOWER.COM

DWG SCALE: N/A	DRAWN BY: RJS	DATE: 06_OCT_2005	
PLOT SCALE: N/A	APPD BY: —	DATE: —	

DESCRIPTION: SCHEMATIC,_CONTROL_PANEL

REFERENCE: FIREPUMP

DRAWING NUMBER: 10423E_SHT1

ADDITIONAL CIRCUITS FOR ELECTRONIC ENGINES

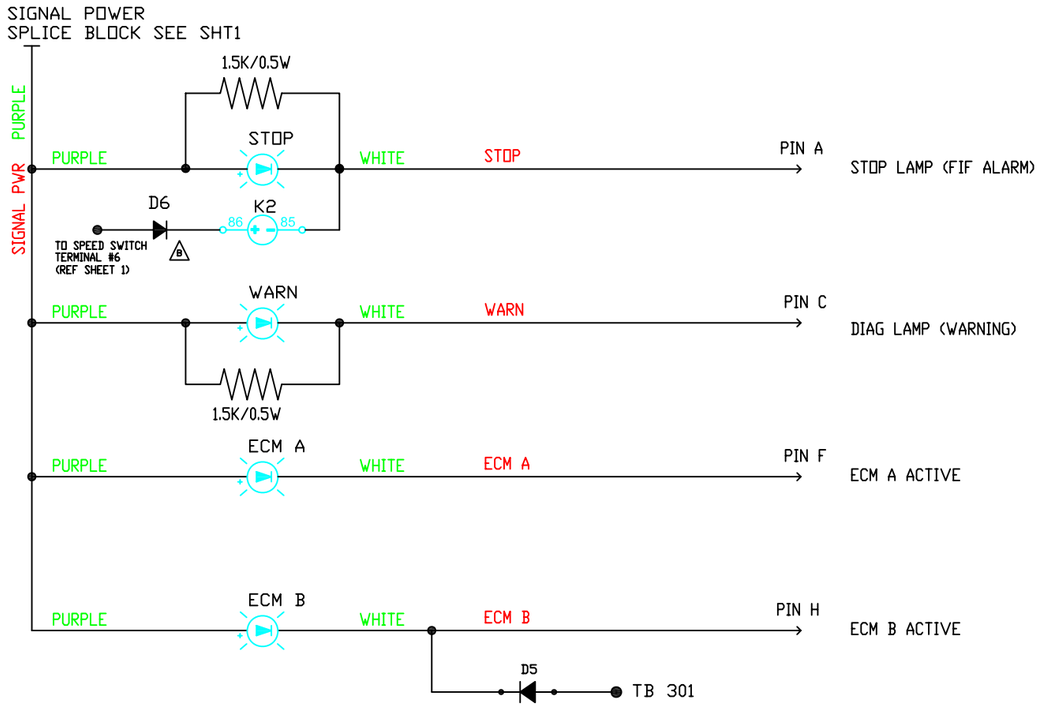



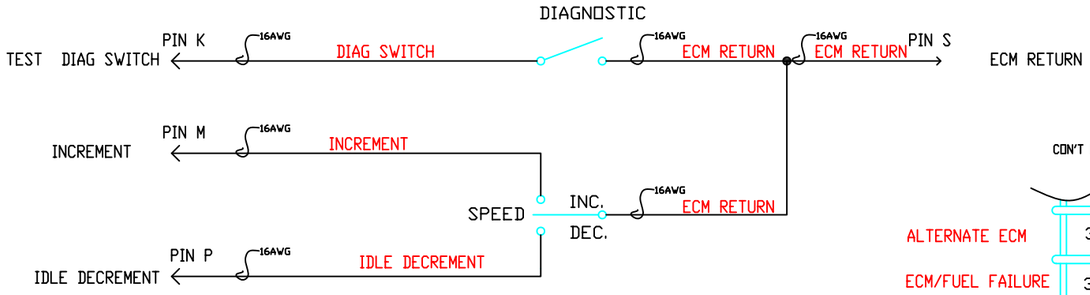

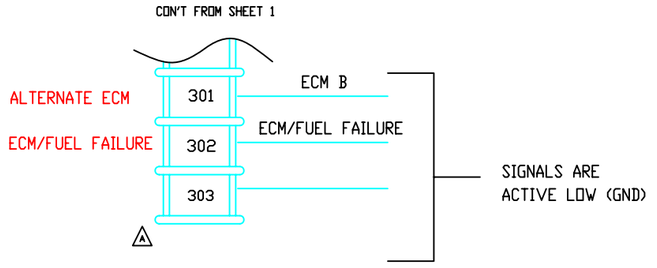

LEGEND:
K2 ECM/FUEL FAIL RELAY
R RESISTOR

NOTES: WIRE IS 14AWG UNLESS OTHERWISE NOTED
RED TEXT = WIRE TAG
GREEN TEXT = WIRE COLOR
WIRE COLOR IS WHITE UNLESS OTHERWISE NOTED
RESISTOR VALUE = 1.5Kohms, 1/2W
MINIMUM DIODE RATING: 6A/400V

REV	DESCRIPTION OF REVISION	BY	DATE
E	ADDED SHEETS 3, 4, 5, & 6	RJS	20 MAR 07
D	SEE SHT 1 FOR REV CHANGE	RJS	19 SEPT 06
C	REDREW	RJS	3 JULY 06
B	CHG'D WIRING OF K2	RJS	17 DEC 05
A	REF PAGE 1 REV NOTES	RJS	27 OCT 05

ALL RIGHTS TO MANUFACTURE, COPY OR DISPOSE OF THIS DRAWING OR ITS CONTENTS ARE RESERVED UNLESS OTHERWISE SPECIFIED IN WRITING BY CUMMINS NPOWER, LLC

UNLESS OTHERWISE NOTED
ALL DIMENSIONS ARE IN INCHES
APPLY MACHINE TOLERANCES
X = ± 0.06
.XX = ± 0.010
.XXX = ± 0.001
APPLY WELDED TOLERANCES
X = ± 0.06
.XX = ± 0.12
.XXX = ± 0.06

CUMMINS NPOWER
CORPORATE OFFICE
1600 BUERKLE ROAD
WHITE BEAR LAKE, MN
WWW.NPOWER.CUMMINS.COM

CUMMINS FIRE POWER
DESIGN CENTER
875 LAWRENCE DRIVE
DEPERE, WISCONSIN
WWW.CUMMINSFIREPOWER.COM

DWG SCALE:	N/A
PLOT SCALE:	N/A
DRAWN BY:	RJS
APPD BY:	—
DATE:	06_OCT_2005
DATE:	—

DESCRIPTION: SCHEMATIC;_CONTROL_PANEL
REFERENCE: FIREPUMP
DRAWING NUMBER: 10423E_SHT2

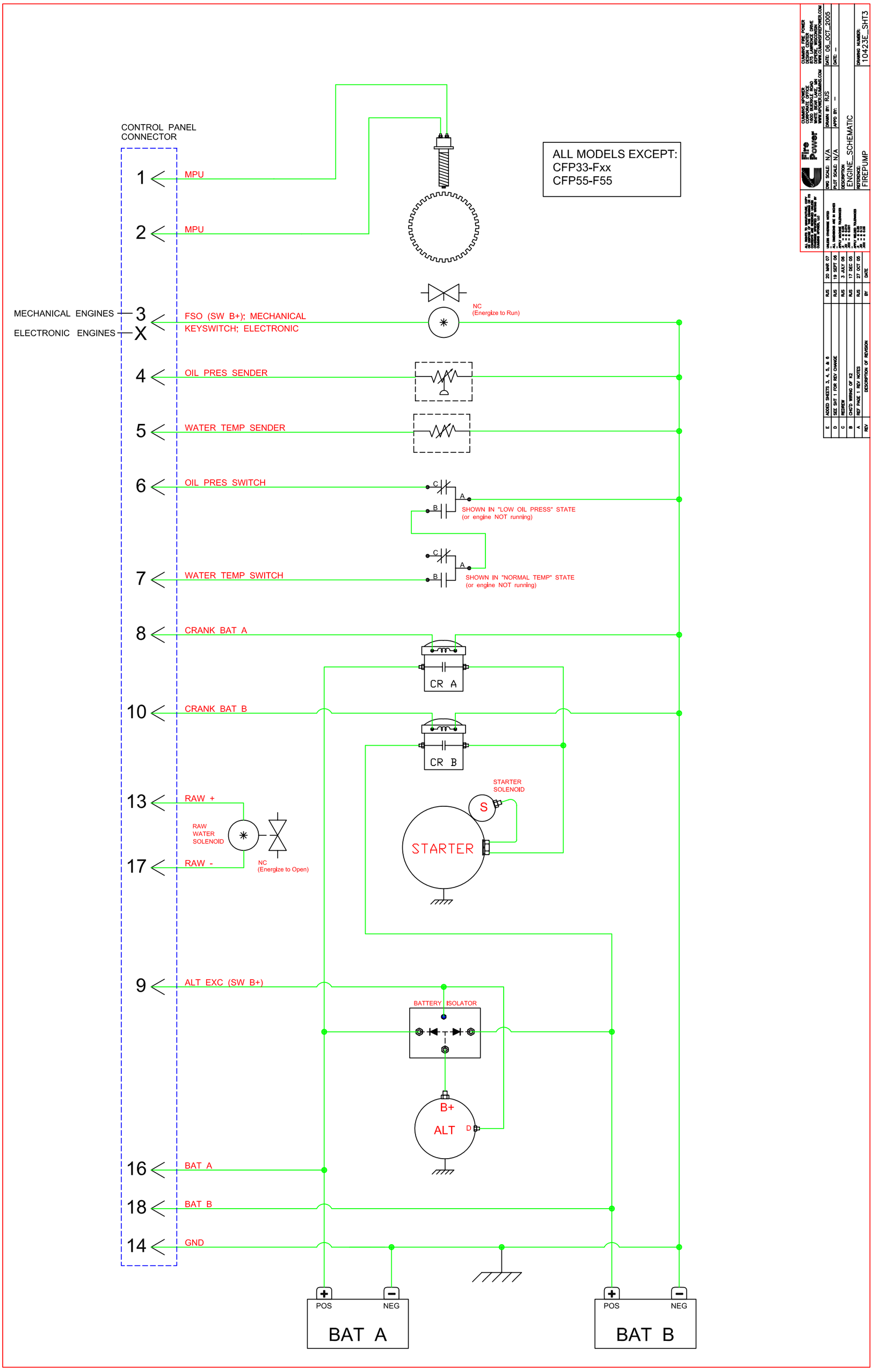

CONTROL PANEL CONNECTOR
ALL MODELS EXCEPT:
CFP33-Fxx
CFP55-F55
1 MPU
2 MPU
MECHANICAL ENGINES
ELECTRONIC ENGINES
3 X FSO (SW B+); MECHANICAL KEYSWITCH; ELECTRONIC
NC (Energize to Run)
4 OIL PRES SENDER
5 WATER TEMP SENDER
6 OIL PRES SWITCH
SHOWN IN "LOW OIL PRESS" STATE (or engine NOT running)
7 WATER TEMP SWITCH
SHOWN IN "NORMAL TEMP" STATE (or engine NOT running)
8 CRANK BAT A
CR A
10 CRANK BAT B
CR B
13 RAW +
RAW WATER SOLENOID
17 RAW -
NC (Energize to Open)
STARTER SOLENOID
S
STARTER
9 ALT EXC (SW B+)
BATTERY ISOLATOR
B+
ALT
D
16 BAT A
18 BAT B
14 GND
POS
NEG
BAT A
POS
NEG
BAT B
Fire Power
CUMMINS POWER CORPORATE OFFICE 8700 BLUEMOUND ROAD WHITE BEAR LAKE, MN WWW.APOWER.CUMMINS.COM
CUMMINS FIRE POWER DESIGN CENTER 8750 DEPOT DRIVE DEPOT, WISCONSIN WWW.CUMMINSFIREPOWER.COM
DWG SCALE: N/A
PLOT SCALE: N/A
DRAWN BY: RJS
APPD BY: –
DATE: 06_OCT_2005
DATE: –
DESCRIPTION: ENGINE_SCHEMATIC
REFERENCE: FIREPUMP
DRAWING NUMBER: 10423E_SHT3
E ADDED SHEETS 3, 4, 5, & 6 RJS 20 MAR 07
D SEE SHT 1 FOR REV CHANGE RJS 19 SEPT 06
C REDREW RJS 3 JULY 06
B CHG'D WIRING OF K2 RJS 17 DEC 05
A REF PAGE 1 REV NOTES RJS 27 OCT 05
REV DESCRIPTION OF REVISION BY DATE

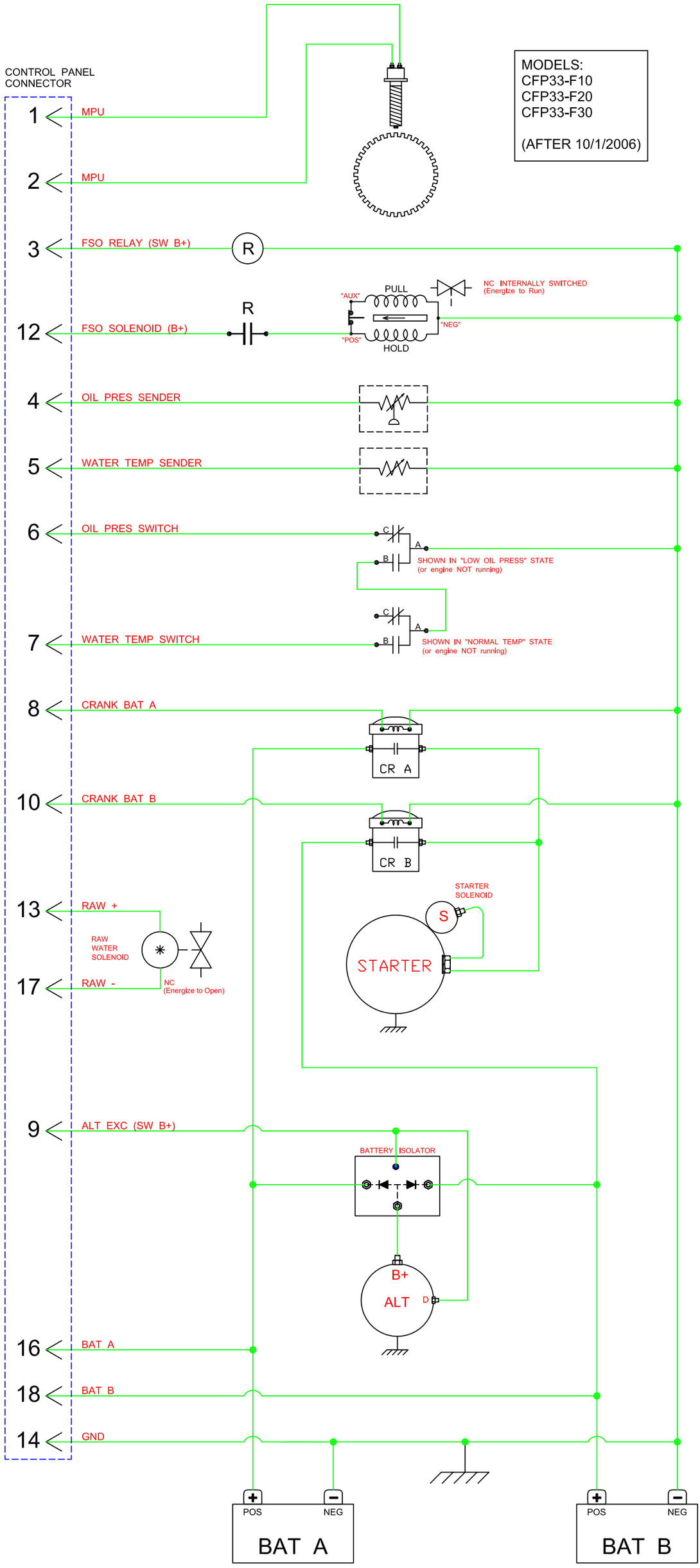

MODELS:
CFP33-F10
CFP33-F20
CFP33-F30

(AFTER 10/1/2006)

REV	DESCRIPTION OF REVISION	BY	DATE
E	ADDED SHEETS 3, 4, 5, & 6	RJS	20 MAR 07
D	SEE SHT 1 FOR REV CHANGE	RJS	19 SEPT 06
C	REDREW	RJS	3 JULY 06
B	CHG'D WIRING OF K2	RJS	17 DEC 05
A	REF PAGE 1 REV NOTES	RJS	27 OCT 05

ALL RIGHTS TO THIS DRAWING, COPY OR DESIGN IS THE PROPERTY OF THE CLIMAX PROPERTY, LLC. CONTAINS PROPRIETARY INFORMATION.

UNLESS OTHERWISE NOTED
ALL DIMENSIONS ARE IN INCHES
APPLY MACHINE TOLERANCES
.XX = ± 0.010
.XXX = ± 0.001
APPLY BLEND TOLERANCES
.XX = ± 0.10
.XXX = ± 0.010

Fire Power

CLIMAX FIRE POWER
DESIGN CENTER
875 DIVISION ROAD
WHITE BEAR LAKE, MN
WWW.APOWER-CLIMAX.COM

CLIMAX FIRE POWER
DESIGN CENTER
875 DIVISION ROAD
WHITE BEAR LAKE, MN
WWW.CLIMAXFIREPOWER.COM

DWG SCALE: N/A
PLOT SCALE: N/A
DRAWN BY: RJS
APPD BY: –
DATE: 06_OCT_2005
DATE: –

DESCRIPTION: ENGINE_SCHEMATIC
REFERENCE: FIREPUMP
DRAWING NUMBER: 10423E_SHT4

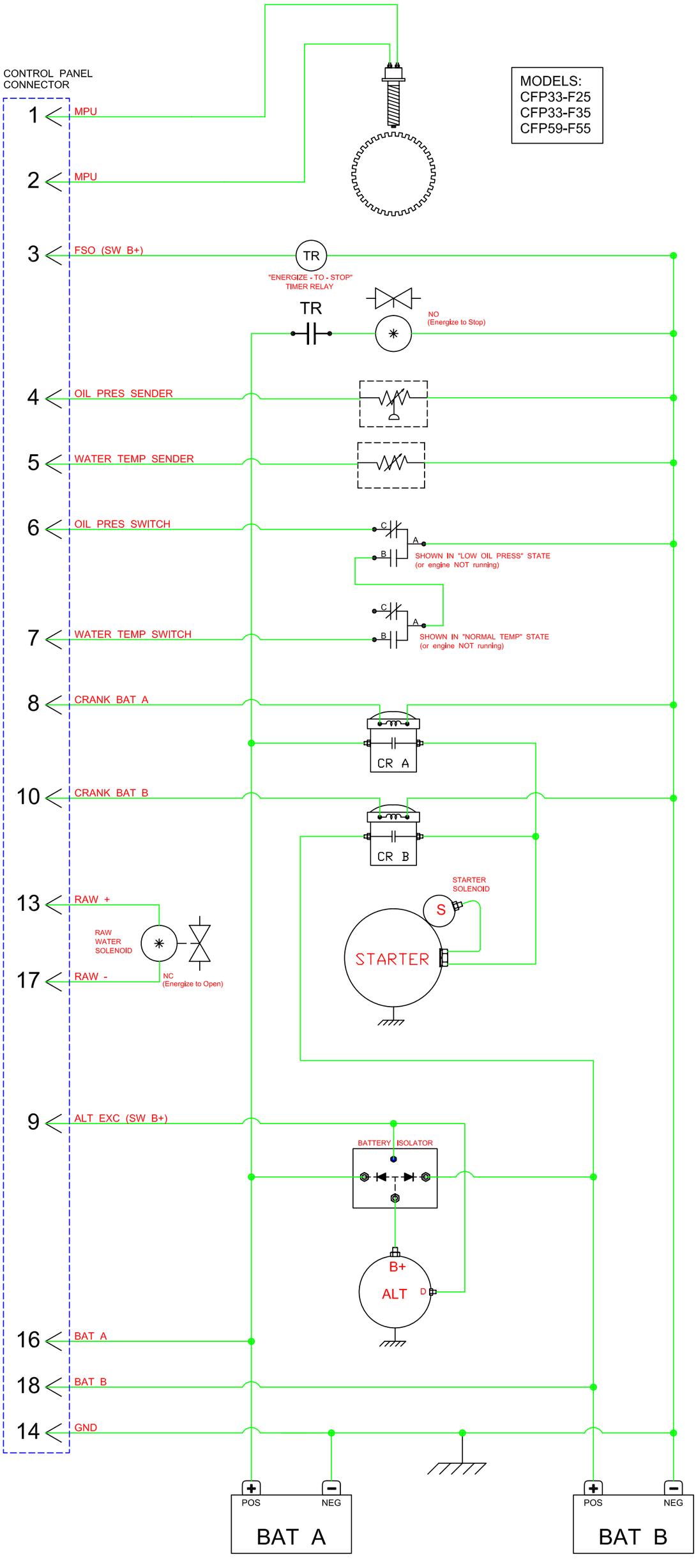

MODELS:
CFP33-F25
CFP33-F35
CFP59-F55

Fire Power

CUMMINS POWER
CORPORATE OFFICE
1600 DUNDEE ROAD
WHITE BEAR LAKE, MN
WWW.FIREPOWER.CUMMINS.COM

CUMMINS FIRE POWER
DESIGN CENTER
875 DRIVE
DEPERE, WISCONSIN
WWW.CUMMINSFIREPOWER.COM

DWG SCALE: N/A
PLOT SCALE: N/A
DESCRIPTION: ENGINE_SCHEMATIC
REFERENCE: FIREPUMP
DRAWN BY: RJS
APPD BY: --
DATE: 06_OCT_2005
DATE: --
DRAWING NUMBER: 10423E_SHT5

REV	DESCRIPTION OF REVISION	BY	DATE
E	ADDED SHEETS 3, 4, 5, & 6	RJS	20 MAR 07
D	SEE SHT 1 FOR REV CHANGE	RJS	19 SEPT 06
C	REDREW	RJS	3 JULY 06
B	CHG'D WIRING OF K2	RJS	17 DEC 05
A	REF PAGE 1 REV NOTES	RJS	27 OCT 05

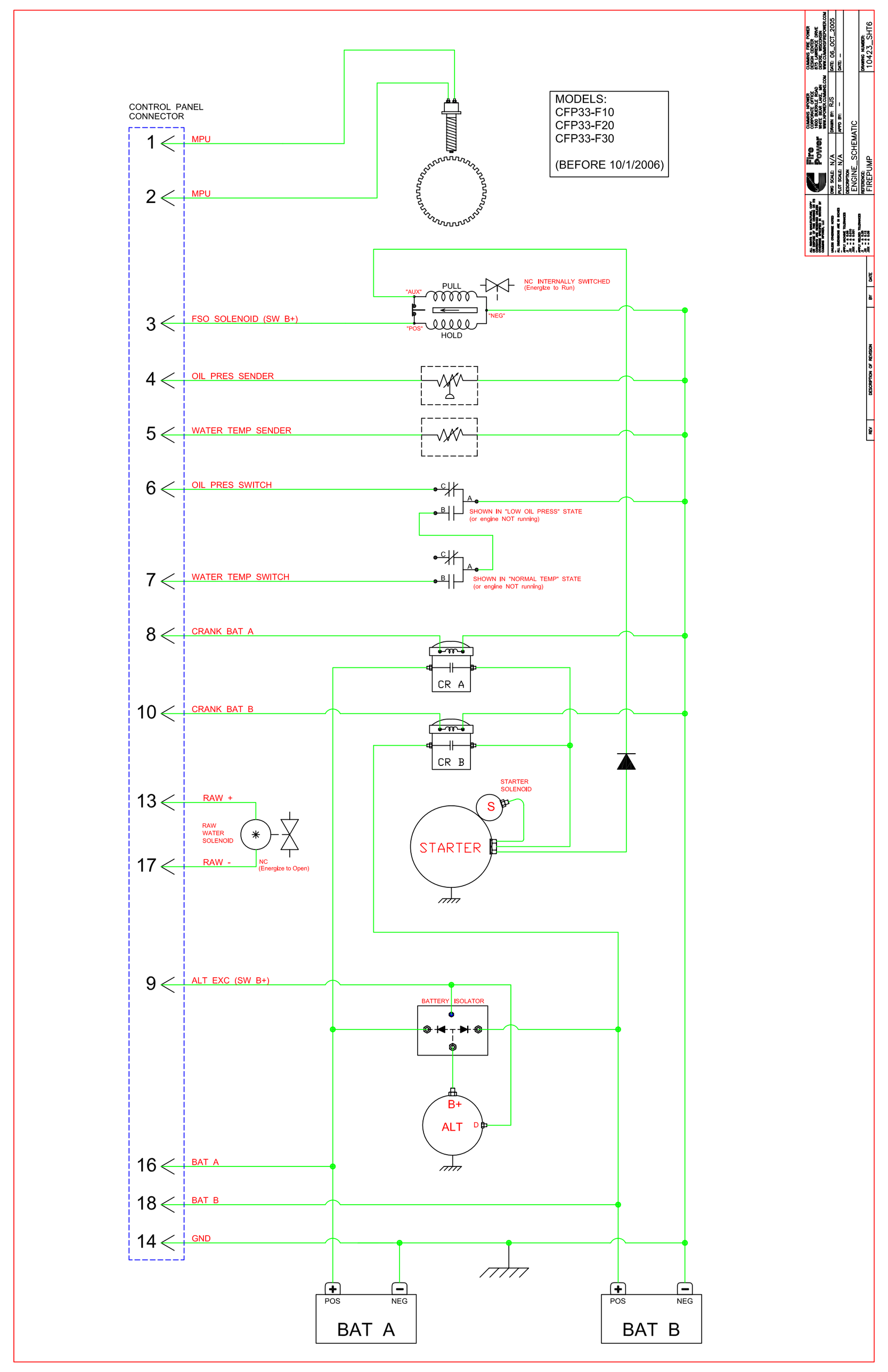

MODELS:
CFP33-F10
CFP33-F20
CFP33-F30
(BEFORE 10/1/2006)
CONTROL PANEL CONNECTOR
1 MPU
2 MPU
3 FSO SOLENOID (SW B+)
PULL
HOLD
"AUX"
"POS"
"NEG"
NC INTERNALLY SWITCHED (Energize to Run)
4 OIL PRES SENDER
5 WATER TEMP SENDER
6 OIL PRES SWITCH
SHOWN IN "LOW OIL PRESS" STATE (or engine NOT running)
7 WATER TEMP SWITCH
SHOWN IN "NORMAL TEMP" STATE (or engine NOT running)
8 CRANK BAT A
CR A
10 CRANK BAT B
CR B
13 RAW +
17 RAW -
RAW WATER SOLENOID
NC (Energize to Open)
STARTER SOLENOID
S
STARTER
9 ALT EXC (SW B+)
BATTERY ISOLATOR
B+
ALT
D
16 BAT A
18 BAT B
14 GND
POS
NEG
BAT A
POS
NEG
BAT B
Fire Power
CUMMINS FIRE POWER
DESIGN CENTER
8750 UNIVERSITY BLVD
DEPOSIT, WISCONSIN
WWW.CUMMINSFIREPOWER.COM
DWG SCALE: N/A
PLOT SCALE: N/A
DRAWN BY: RJS
APPD BY: --
DATE: 06_OCT_2005
DATE: --
DESCRIPTION
ENGINE_SCHEMATIC
REFERENCE:
FIREPUMP
DRAWING NUMBER:
10423_SHT6
REV
DESCRIPTION OF REVISION
BY
DATE

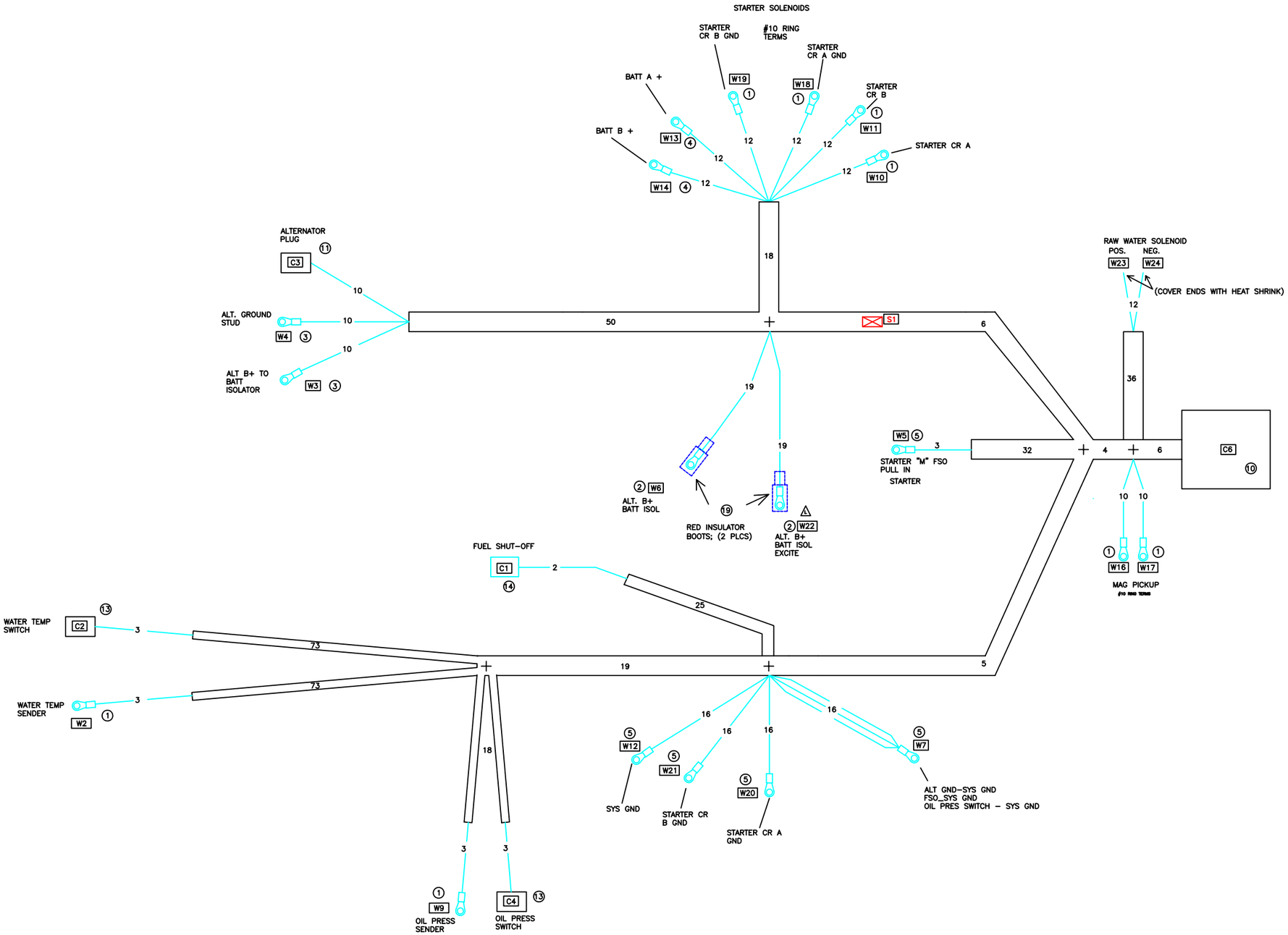

THIS HARNESS TO BE OVER-BRAIDED WITH BLACK AND RED NYLON. ALL BLACK NYLON WILL BE CONSIDERED.

THIS HARNESS TO BE USED ON THE FOLLOWING FIREPUMP ENGINES ONLY - 4B, 6B, AND 6C

ALL DIMENSIONS IN INCHES

REV	DESCRIPTION OF REVISION	BY	DATE
L	REMOVED BAT ISOL EXCITE FUSE	RJS	25 OCT 06
K	W10 & W11 WERE 14 AWG	RJS	29 JUNE 06
J1	Chg'd red insulator boot p/n	RJS	21 March 05
J	REDREW TO FIT ECM ENGINES; ADDED ITEMS 19 & 20	RJS	4JAN05

ALL RIGHTS TO MANUFACTURE, COPY OR DISPOSE OF THIS DRAWING OR ITS CONTENTS ARE RESERVED UNLESS OTHERWISE SPECIFIED IN WRITING BY CUMMINS NPOWER, LLC

UNLESS OTHERWISE NOTED
-
ALL DIMENSIONS ARE IN INCHES
-
APPLY MACHINE TOLERANCES
.X = ± 0.06
.XX = ± 0.010
.XXX = ± 0.001
-
APPLY WELDED TOLERANCES
.X = ± 0.25
.XX = ± 0.12
.XXX = ± 0.06

CUMMINS NPOWER
CORPORATE OFFICE
1600 BUERKLE ROAD
WHITE BEAR LAKE, MN
WWW.NPOWER.CUMMINS.COM

CUMMINS FIRE POWER
DESIGN CENTER
875 LAWRENCE DRIVE
DEPERE, WISCONSIN
WWW.CUMMINSFIREPOWER.COM

DWG SCALE: -	DRAWN BY: SAH	DATE: 29JUN2004
PLOT SCALE: -	APPD BY: -	DATE: -

DESCRIPTION
WIRING_HARNESS_SCHEMATIC

REFERENCE:
FIRE_PUMPS_NON-3.3LITER

DRAWING NUMBER:
8513SHT1_L

CIRCUIT DATA

CIRCUIT NO.	FROM DESIGNATOR	FROM CAVITY POS./TERMINAL	TO DESIGNATOR	TO CAVITY POS./TERMINAL	WIRE COLOR	WIRE SIZE (AWG)	INSUL TYPE	STAMP
	C1	B	W5	1/2" RNG	WHT	16	SXL	FSO PULL-IN
	C1	C	W7	1/2" RNG	WHT	16	SXL	FSO GND
	C2	A	C4	B	WHT	16	GXL	OPS TO WTS
	C3	C	S1	-	WHT	16	SXL	EXCITE
	C4	A	W7	1/2" RNG	WHT	16	GXL	OPS GND
	S1	-	W22	1/4" RNG	WHT	16	SXL	BATT EXCITE
	C6	1	W16	#10 RING	WHT	16	SXL	MPU +
	C6	2	W17	#10 RING	WHT	16	SXL	MPU -
	C6	3	C1	A	WHT	16	SXL	FSO/KEY
	C6	4	W9	#10 RNG	WHT	16	SXL	OPG
	C6	5	W2	#10 RNG	WHT	16	SXL	WTG
	C6	6	C4	C	WHT	16	GXL	LOPL
	C6	7	C2	B	WHT	16	GXL	HWTL
	C6	8	W10	#10	WHT	10	SXL	CRANK A
K	C6	9	S1	-	WHT	16	SXL	EXCITE
K	C6	10	W11	#10 RING	WHT	10	SXL	CRANK B
K	C6	13	W23	NO TERM	WHT	14	SXL	RW SOL +
K	C6	14	W12	1/2"	WHT	10	GXL	SYS GND
	C6	16	W13	3/8"	WHT	10	GXL	BATT A+
	C6	17	W24	NO TERM	WHT	14	SXL	RW SOL-
	C6	18	W14	3/8"	WHT	10	GXL	BATT B+
	W18	#10	W20	1/2" RNG	WHT	14	SXL	CRNK A GND
	W19	#10	W21	1/2" RNG	WHT	14	SXL	CRNK B GND
	W3	5/16" RNG	W6	1/4" RNG	WHT	6	GXL	ALT B+
	W4	5/16" RNG	W7	1/2" RNG	WHT	6	GXL	ALT GND

WIRING HARNESS CONTENT

REF NO.	SUPPLIER	SUPPLIER PART NO.	QTY.	DESCRIPTION
1			8	#10 RING TERMINAL
2			2	1/4" RING TERMINAL
3			2	5/16" RING TERMINAL
4			2	3/8" RING TERMINAL
5			5	1/2" RING TERMINAL
10	DEUTSCH	HDP26-24-19SN	1	MAIN CONNECTOR
11	PACKARD	12047950/12186566	1	ALT PLUG CONN. ASMBLY
13	PACKARD	12162280	2	WTS/OPS CONN. W/SOCKETS & SEAL
14	PACKARD	12015793	1	FSO CONN. W/SOCKETS
18			1	FUSE 6 AMP
19	stella-maris	400N9V02	2	RED INSULATOR BOOT

REV	DESCRIPTION OF REVISION	BY	DATE
L	REMOVED BAT ISOLATOR EXCITE FUSE	RJS	25 OCT 06
K	W10 & W11 WERE 14 AWG	RJS	29 JUNE 06
J1	Chg's Item 19 p/n; Deleted Item 20	RJS	21 March 05
J	ADDED ITEMS 19 & 20	RJS	4JAN05

ALL RIGHTS TO MANUFACTURE, COPY OR DISPOSE OF THIS DRAWING OR ITS CONTENTS ARE RESERVED UNLESS OTHERWISE SPECIFIED IN WRITING BY CUMMINS NPOWER, LLC

UNLESS OTHERWISE NOTED
ALL DIMENSIONS ARE IN INCHES
APPLY MACHINE TOLERANCES
X = ± 0.06
.XX = ± 0.010
.XXX = ± 0.001
APPLY WELDED TOLERANCES
X = ± 0.12
.XX = ± 0.12
.XXX = ± 0.06

CUMMINS NPOWER
CORPORATE OFFICE
1600 BUERKLE ROAD
WHITE BEAR LAKE, MN
WWW.NPOWER.CUMMINS.COM

NPOWER SYSTEMS
DESIGN CENTER
575 LAWRENCE DRIVE
DEPERE, WISCONSIN

DWG SCALE: | DRAWN BY: SAH | DATE: 1 OCT 04
PLOT SCALE: | APPD BY: | DATE:
DESCRIPTION: WIRING HARNESS SCHEMATIC
REFERENCE: FIRE PUMP CONTROL PANEL
DRAWING NUMBER: 8513SHT2_L